EP·07·108

GENERAL NOTES:

1. IT IS THE RESPONSIBILITY OF THE CONTRACTOR TO VERIFY THE EXACT LOCATION AND DEPTH OF ALL UTILITIES PRIOR TO CONSTRUCTION.
2. ALL WORK SHALL COMPLY WITH CAL WATER SPECIFICATIONS FOR MATERIALS, INSTALLATION, DISINFECTION AND DECHLORINATION PER LATEST OF REVISION OF DRAWING CW-863.
3. ALL TEES, ELLS AND CAPS SHALL BE BLOCKED WITH POURED IN PLACE CONCRETE THRUST BLOCKS PER LATEST REVISION OF DRAWING CW-435.
4. UNDERGROUND PROTECTION:
   PROTECT UNDERGROUND FLEXIBLE COUPLINGS, BARE STEEL AND BOLTS AS FOLLOWS:
   A. THE ENTIRE AREA OF THE FITTING SHOULD BE DRY AND FREE OF DUST, DIRT OR OTHER FOREIGN MATTER. RUST OR OTHER FOREIGN MATERIAL SHOULD BE REMOVED BY SCRAPING OR WIRE BRUSHING, WIPING WITH DRY CLEAN CLOTH MAY BE NECESSARY TO REMOVE PARTICLES FROM BRUSH CLEANING. ANY OIL OR GREASE MUST BE REMOVED USING A LOW RESIDUE VOLATILE PETROLEUM SOLVENT BEFORE APPLICATION OF GREASE AND WRAPPING.
   B. THE EXPOSED AREA SHOULD BE COATED WITH A HEAVY COATING OF METALGUARD #301 GREASE BY THE GLOVE METHOD TO A THICKNESS OF AT LEAST 1/4 INCH.
   C. FIRMLY WRAP THE ENTIRE GREASE AREA WITH AT LEAST TWO LAYERS HALF LAPPED OF A WOVEN GLASS FILAMENT MESH (RES OR BIT WRAP, 4" WIDE) APPLY GREASE BETWEEN EACH LAYER DURING WRAPPING, WORKING THE GREASE INTO MESH OPENINGS.
   D. COVER THE ENTIRE MESH WRAPPED AREA OF FITTING WITH AT LEAST 1/4 INCH THICK OF METALGUARD #301 GREASE BY THE GLOVE METHOD.
   E. FIRMLY APPLY TWO LAYERS OF THE POLYWRAP TUBE OVER PROTECTED AREA BY SPLITTING THE TUBE AND TAPING THE POLYWRAP IN PLACE WITH THE PVC TAPE.
   F. BACKFILLING MAY FOLLOW IMMEDIATELY AFTER THE POLYWRAP TUBE IS TAPED CLOSED.
5. (O) = INDICATES FIRE HYDRANT (STOCKTON)
   THE FOLLOWING ITEMS ARE NOT A PART OF THE REFUNDABLE EXTENSION AGREEMENT FOR EACH FIRE HYDRANT. OTHERS TO PROVIDE MATERIALS & LABOR:

1 –	6 INCH OUTLET TEE POxFLG CI CL
1 –	6x8-3/4x1/16 INCH RING GASKET W/CI
8 –	3/4x3-1/2 INCH MACHINE BOLTS W/HEX NUTS,
18-8	STAINLESS STEEL
1 –	6 INCH GATE VALVE FLGxMJ NRS NO RS
1 –	VALVE CASING AND COVER ASSEMBLY
+/-	7 FEET OF 6 INCH PVC PIPE CL150
1 –	6 INCH FIRE HYDRANT BURY FLGxMJ
1 –	6 INCH FIRE HYDRANT HEAD

POLYWRAP TUBING, PVC TAPE, LINE GUARD AND MISC. COATING MAT'L.

HYDRANT ASSEMBLY W/CITY OF STOCKTON APPROVAL.

THE CWS CO PORTION OF THE INSTALLATION OF THE FIRE HYDRANT SHALL BE LIMITED TO THE POxFLG TEE AND FLGxMJ GATE VALVE. THE GATE VALVE, GASKET & BOLTS SHALL BE SUPPLIED BY OTHERS. THE REMAINDER OF THE FIRE HYDRANT MATERIALS SHALL BE INSTALLED BY OTHERS WITH THE CITY OF STOCKTON FIRE DEPARTMENT APPROVAL.

THE CITY OF STOCKTON OWNS THE FIRE HYDRANT.

SITE PLAN
STA 2+00 TO 7+15
SCALE: 1"=20'

	QTY	DESCRIPTION
A	1	6" TRANS. CPLG. (DIxAC)
B	5'	6" DI PIPE
C	1	6" SOLID SLEEVE, MJ

DETAIL "A"
N.T.S.

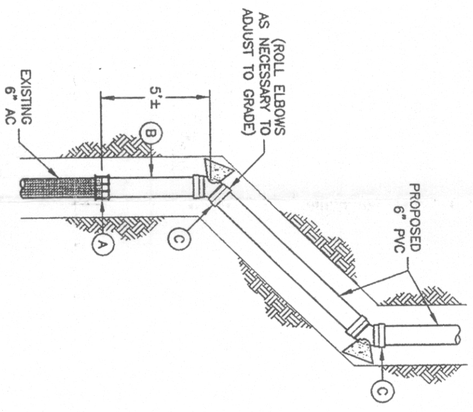

	QTY	DESCRIPTION
A	1	6" TRANS. CPLG. (PVCxAC)
B	5'	6" PVC PIPE
C	2	6" ELL, 45° PO, W/FIELD-LOK GASKETS

DETAIL "B"
N.T.S.

	QTY	DESCRIPTION
A	1	6" SOLID SLEEVE MJ
B	3	6" DUCTILE IRON PIPE (18 FT. LONG)
C	1	6" TEE PO, W/FIELD LOK GASKETS
D	1	6" GATE VALVE, PO W/FIELD LOK GASKETS
E	5'	6" DUCTILE IRON PIPE (CUT TO FIT)
F	2	6" TRANS. CPLG. (DIxAC)

DETAIL "C"
N.T.S.

NOTE:
1. ALL EXCESS SPOIL IN TRACT IS TO REMAIN TRENCHSIDE AND ALL EXCESS SPOIL OFF TRACT IS TO BE REMOVED.
2. ALL VALVE CASINGS AND COVERS SHALL BE RAISED TO FINISHED GRADE AFTER PERMANENT PAVEMENT HAS BEEN PLACED.

TRENCH CROSS SECTION
SCALE: N.T.S.

SITE PLAN
STA 30+65 TO 32+35
SCALE: 1"=20'

PROFILE A-A
SCALE: 1"=2'

PIECE MARKED "A"	"A"	"B"	"C" 4'+2A+B	"D" B-2E	"E" A/.707	"F" F-2E	"G"	"H" 2'-0"-E
	2.50'	2.32'	11.32'	1.70'	3.54'	2.92'	2.92'	20.25"

PIECE MARKED "A"	QTY	PIPE STEEL (OD)	PIPE SCHED.	CML	CMC	ELBOW SCHED.	ELBOW "E"
	1	6.63"	40	3/8"	3/4"	40	3.75"

CEMENT MORTAR LINING, CML
CEMENT MORTAR COATING, CMC

NOTES:
1. STEEL CYLINDER SHALL BE PER A.S.A. WITH ASTM A53 TEST PRESSURE AND ASTM A36 PHYSICAL PROPERTIES.
2. COATING SHALL BE REINFORCED WITH 14 GAUGE WIRE MESH OR 14 GAUGE WIRE SPIRALLY WOUND IN CENTER OF COATING PER LATEST REVISION OF AWWA STANDARD C205.
3. WELDING FITTINGS SHALL BE ASTM A234 GRADE B.

CEMENT MORTAR LINED AND COATED STEEL DOUBLE OFFSET WITH 45° ELBOWS

VICINITY MAP
N.T.S.

BILL OF MATERIALS

QUANTITY	DESCRIPTION
500'±	6" PVC PIPE
10'±	6" DUCTILE IRON PIPE
3	6" DUCTILE IRON PIPE, FULL STICK (18 FT. LONG)
1	6" CL&C DOUBLE OFFSET W/45° ELBOWS (PIECE MARKED "A")
2	6" TEE, PO W/FIELD-LOK GASKETS
2	6" ELL 45°, PO W/FIELD-LOK GASKETS
2	6" GATE VALVE, PO ONE W/FIELD-LOK GASKET
4	6" TRANS. COUPLING (ACxPVC) OR (ACxDI)
2	6" TRANS. COUPLING (ACx6.63"OD)
2	6" SOLID SLEEVE, MJ
2	VALVE CASING COVER & ASSEMBLY
AS REQ'D	TRACER WIRE #12 AWG STRANDED COPPER-THW INSULATED
AS REQ'D	LINE GUARD TAPE
AS REQ'D	METAL GUARD #301
AS REQ'D	RES BIT WRAP (100' ROLLS)
MISC	MATERIALS INCLUDING CAPS FOR TESTING, DISINFECTION, AND FLUSHING
MISC	POLY WRAP, TRACER WIRE, LINE GUARD, METAL GUARD, PVC TAPE, AND PVC TAPE FOR FIRE HYDRANT ASSEMBLY

REFERENCE LIST ONLY – CONTRACTOR TO VERIFY AND OBTAIN ALL MATERIALS REQUIRED TO COMPLETE THE PROJECT.

LEGEND:

- TEE
- ELBOW, 45°
- ELBOW, 90°
- BLOWOFF (PROPOSED)
- BLOWOFF (EXISTING)
- GATE VALVE (PROPOSED)
- GATE VALVE (EXISTING)
- REDUCER (PROPOSED)
- REDUCER (EXISTING)
- SOLID PLUG
- PROPOSED WATER MAIN
- EXISTING WATER MAIN
- SANITARY SEWER
- STORM DRAIN
- FIRE HYDRANT (PROPOSED)
- FIRE HYDRANT (EXISTING)
- BUTTERFLY VALVE
- CHECK VALVE
- FLEX CPLG.
- ALTITUDE VALVE

SUMMARY OF WORK

- INSTALL ONE 6" CL&C DOUBLE OFFSET
- INSTALL 500'± OF 6" PVC PIPE
- INSTALL 65'± OF 6" DI PIPE
- ABANDON 230'± OF 4" STEEL PIPE
- ABANDON 50'± OF 6" ACRB PIPE
- REMOVE 50' ± OF 6" ACRB PIPE

IMPORTANT:

- THE CONTRACTOR SHALL FIELD VERIFY ALL UTILITES PRIOR TO EXCAVATION.

ENGINEERING
CALIFORNIA WATER SERVICE CO.
DEPARTMENT

REVISIONS:

	DATE:	INIT.
MAP		
PLAT SHEET	☒	
SYSTEM SCHEMATIC	☒	
STATION SCHEMATIC		
LOOP MAP		
VALVE RECORD		

PLAT SHEET NO.: STK-27-31, 27-32
SCALE: AS SHOWN
DRAWN BY: W. RODRIGUEZ
DESIGNED BY: J.E. VIRGILIO
CHECKED BY: DATE:
APPROVED BY: DATE: 3/27/07

TITLE: INSTALL 500 FT. OF 6" PVC & DI PIPE IN MYRAN AVE. FROM KENYON ST. TO FLORIDA AVE. INSTALL CL&C DOUBLE OFFSET IN REPORT AVE.

DISTRICT: STOCKTON
DATE: 3/26/2007
PROJECT ID.: 18044
DRAWING NO.: STK-8517
SHT 1 OF 1