EP-08-1794-1

PLEASE CALL U.S.A. AT
LEAST 48 HOURS PRIOR TO
EXCAVATING IN THIS AREA

1-800-227-2600

TICKET # _____

DATE CALLED _____

CONTACT:
RANDY MADERA, 942-1748
FOR ANY IN-FIELD ISSUES.

NOTE:
EXCAVATE (2) 15'x5' PITS
IN DIRT AREA.

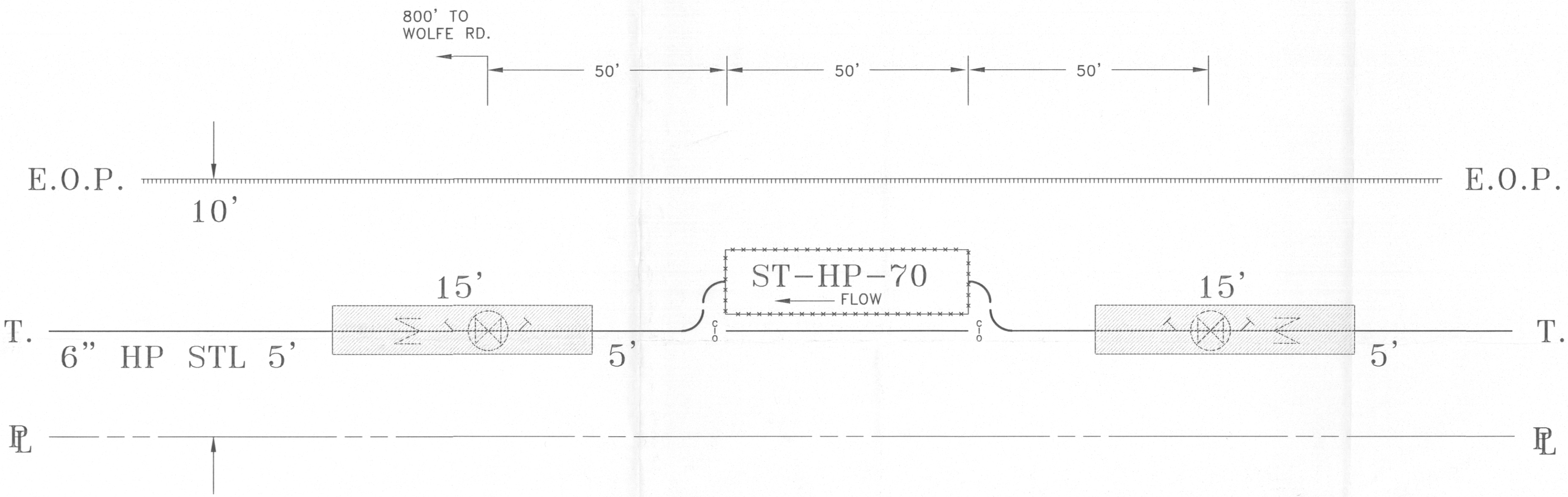

S/S MATHEWS RD. 800 FT. E/O WOLFE RD.

NOT TO SCALE

N

MAP: 3060-C7
CPA: LINE 108
TBA: X-05
MAOP: UPRATE TO 720 PSIG
E.S.ZONE: 16-ST-10-A

CO:
SD:
NOTIF.: 102659629
Other:
SHT: SHEETS
PM: 30613010 REV.

ENGINEERING AND PLANNING DEPT.
4040 WEST LANE
STOCKTON, CA 95204
PHONE #: (209) 942-1498 FAX #: (209) 942-1768
PACIFIC GAS AND ELECTRIC COMPANY

EST: JG HOUBEIN
ADE: RD GIBBS
SUPV: MM LANG
REP: DC RYMERS
PLNR: DC RYMERS
SCALE: 1"=40'
DATE: 5/21/08

ST-HP-70, MATHEWS ROAD

TIE-IN AND CUT-OFF DETAILS
6" HP STL MAIN UPRATE TO TP
FRANCH CAMP UNINC. - SJ COUNTY