PS·08·2593-4

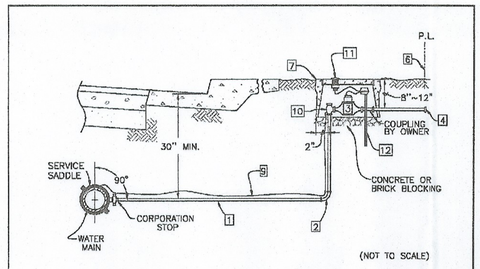

NOTES:

1. 1" DIA. MIN. LINE TO EACH LOT.
2. SERVICE PIPE TO BE CONTINUOUS (NO JOINTS) BETWEEN MAIN AND ANGLE METER STOP. 90° COMP. x COMP. ELL, 'JAMES JONES' J-2610 W/J-2606 OR EQUAL. INSERTS MAY BE USED WHERE APPROVED BY AGENCY.
3. METERS SHALL BE AS SPECIFIED BY AGENCY. METERS SHALL BE FURNISHED AND INSTALLED BY THE CONTRACTOR. AGENCIES MAY ELECT TO PROVIDE THE METER AS PART OF THE CONNECTION FEE.
4. GATE VALVE IS REQUIRED PRIOR TO ANY POINT OF CONNECTION.
5. THE LOCATION OF THE SERVICE SADDLE SHALL BE A MIN. OF 24" FROM ANOTHER SERVICE SADDLE, BELL, SPIGOT, OR OTHER FITTING.
6. METER BOX MAY BE PLACED ADJACENT TO PROPERTY OR EASEMENT LINE WITH PRIOR APPROVAL OF THE AGENCY.
7. RADIO/TOUCH READ METER BOX PER AGENCY REQUIREMENTS. (ALL BOXES LOCATED IN DRIVEWAY AREAS TO HAVE TRAFFIC COVERS.)
8. APPURTENANCES PER AGENCY REQUIREMENTS.
9. LOCATOR WIRE REQUIRED BY AGENCY.
10. BALL ANGLE METER STOP WITH LOCK LUG. (AFTER FLUSHING SERVICE, INSTALL LOCK SUPPLIED BY AGENCY)
11. RADIO/TOUCH READ PAD PER AGENCY REQUIREMENTS. (PROVIDE AT LEAST 4 FEET OF WIRE.)
12. RADIO/REMOTE READ TRANSCEIVER PER AGENCY REQUIREMENTS. SUPPORTED BY 1/2" SCH. 80 CONDUIT (24" MIN.) (PROVIDE 1" CLEARANCE BELOW LID) MXU CERTIFICATE MAY BE ACCEPTED BY AGENCY IN LEIU OF TRANSCEIVER INSTALLATION.

REVISION		DATE	COUNTYWIDE IMPROVEMENT STANDARDS COUNTY OF SAN JOAQUIN	APPROVED BY	
No. 1	By CO	JUNE 2005	WATER SERVICE INSTALLATION	SAN JOAQUIN COUNTY DIRECTOR OF PUBLIC WORKS	DATE
No. 2	By WA	AUGUST 2006		IMPROVEMENT STANDARD NO.	CW-W8

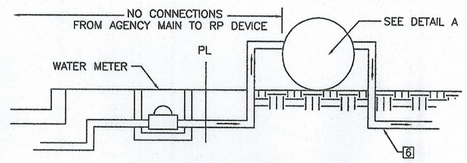

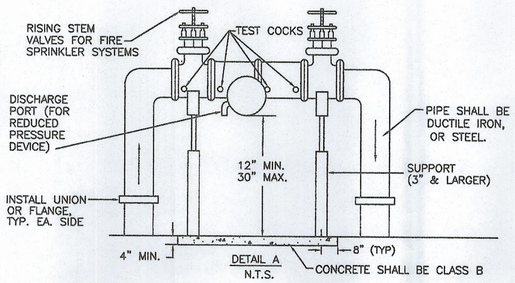

NOTES:

1. INSTALLED DEVICE MUST BE ON AGENCY APPROVED BACKFLOW PREVENTION DEVICE LIST.
2. DEVICE SHALL BE INSTALLED ABOVE GROUND.
3. TEST COCKS AND SHUT-OFF VALVES MUST BE SUPPLIED AND INSTALLED AS SHOWN.
4. DISCHARGE PORT MUST BE KEPT CLEAR OF OBSTRUCTION AT ALL TIMES.
5. ANY DEVIATION FROM THE INSTALLATION SHOWN ABOVE MUST RECEIVE PRIOR APPROVAL.
6. ALL PIPING & APPURTENANCES SHALL BE AWWA RATED 200 PSI FOR FIRE SPRINKLER SYSTEMS.
7. AGENCIES MAY REQUIRE INSULATION TO PREVENT FREEZING OF EXPOSED PIPE.
8. VALVES FOR FIRE SPRINKLER SYSTEMS SHALL BE CHAIN LOCKED IN AN OPEN POSITION AT ALL TIMES.

REVISION	DATE	COUNTYWIDE IMPROVEMENT STANDARDS COUNTY OF SAN JOAQUIN	APPROVED BY	
		REDUCED PRESSURE/DOUBLE CHECK VALVE BACKFLOW PREVENTION DEVICE INSTALLATION	SAN JOAQUIN COUNTY DIRECTOR OF PUBLIC WORKS	DATE JUNE 1997
			IMPROVEMENT STANDARD NO.	CW-W24

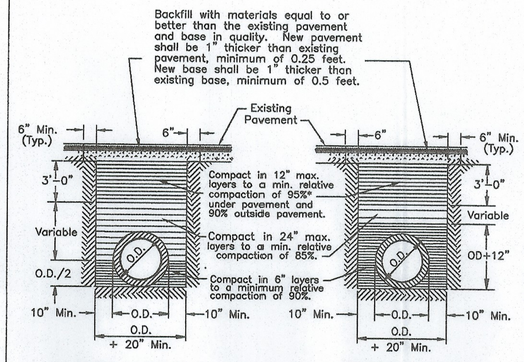

NOTES:

1. Relative compaction of materials shall be tested in accordance with the State of California, Dept. of Transportation Testing Manuals, test method No. California 216 or 231.
2. All existing pavement shall be neatly cut to line prior to trench excavation.
3. Jetting or ponding will be permitted within the street Right of Way with a 3 year bond.
4. When shown by soil composition and compactability, ninety percent (90%) compaction may be used, when approved by the Director of Public Works.
5. Special bedding requirements may be shown on the plans or specified in special provisions.
6. Shoulders shall be as shown on the plans or specified in the special provisions but in no case shall the shoulder be less than three feet wide as measured from the edge of pavement.

No.	Revised	By	TYPICAL TRENCH BACKFILL	Approved by
1	Feb. 1996	PD		Director of Public Works
Drawn by	JLD		COUNTY OF SAN JOAQUIN DEPARTMENT OF PUBLIC WORKS	Date JUNE 1997
Checked by				Drawing No. R-29
Scale	NONE			

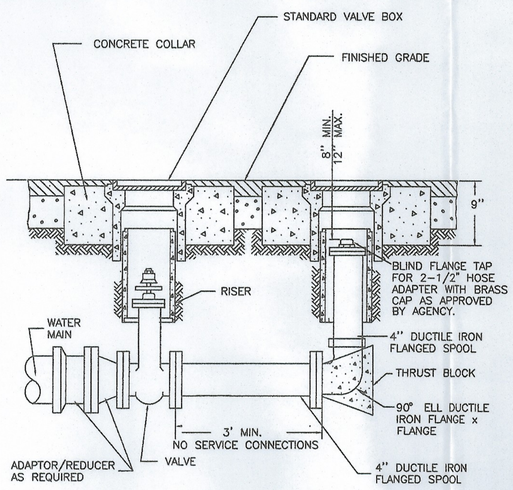

NOTE:

BLOW-OFF MAY BE USED WHERE APPROVED BY AGENCY.

REVISION	DATE	COUNTYWIDE IMPROVEMENT STANDARDS COUNTY OF SAN JOAQUIN	APPROVED BY	
		BLOW-OFF	SAN JOAQUIN COUNTY DIRECTOR OF PUBLIC WORKS	DATE JUNE 1997
			IMPROVEMENT STANDARD NO.	CW-W6

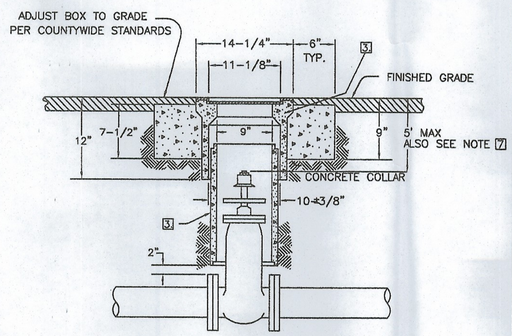

NOTES:

1. VALVE BOX AND LID SHALL BE CHRISTY NO. G5 OR AS APPROVED BY THE AGENCY.
2. ALL LIDS SHALL HAVE MACHINED SEATING SURFACES.
3. VALVE BOX RISERS SHALL BE AS MANUFACTURED FOR THE VALVE BOX SUPPLIED. VALVE BOX RISER TO BE ONE CONTINUOUS PIECE AND CENTERED ON VALVE. SHOULD BE RISER OR 8" ø, CLASS 100 PVC. SEE NOTE 5.
4. FOR BLOWOFF INSTALLATION, REFER TO DRAWING NO. CW-W6.
5. ALTERNATIVE VALVE BOX AND RISERS MAY BE USED WHERE APPROVED BY THE AGENCY.
6. CONCRETE COLLAR NOT REQUIRED WHEN VALVE BOX IS LOCATED IN CONCRETE SIDEWALK AREA.
7. VALVE STEM EXTENSIONS MAY BE USED TO COMPLY WITH 5' MAX. DISTANCE FROM GRADE TO NUT.
8. TRACE WIRE MAY BE USED WHERE APPROVED BY AGENCY.

REVISION	DATE	COUNTYWIDE IMPROVEMENT STANDARDS COUNTY OF SAN JOAQUIN		
		VALVE BOX DETAILS	SAN JOAQUIN COUNTY DIRECTOR OF PUBLIC WORKS	DATE JUNE 1997
			IMPROVEMENT STANDARD NO.	CW-W5

DILLON & MURPHY
CONSULTING CIVIL ENGINEERS
ENGINEERING · PLANNING · SURVEYING
847 N. CLUFF AVENUE, SUITE A-2, LODI, CALIFORNIA, 95240 (209) 334-6613

ORANGE STREET WATER LINE EXTENTION IMPROVEMENT PLANS

DETAILS

JULY, 2008
SAN JOAQUIN COUNTY

REV. NO.	DESCRIPTION	DATE	SCALE: AS NOTED	BENCH MARK: ____ EL: ____	SHEET
			DRAWN BY: MT	DESCRIPTION:	4
			DESIGNED BY:		OF 4 SHEETS
			CHECKED BY:		JOB NO. 0637
			AS BUILT BY:		

S:\2006\0637\Improvement Plans\Details.dwg Aug 04