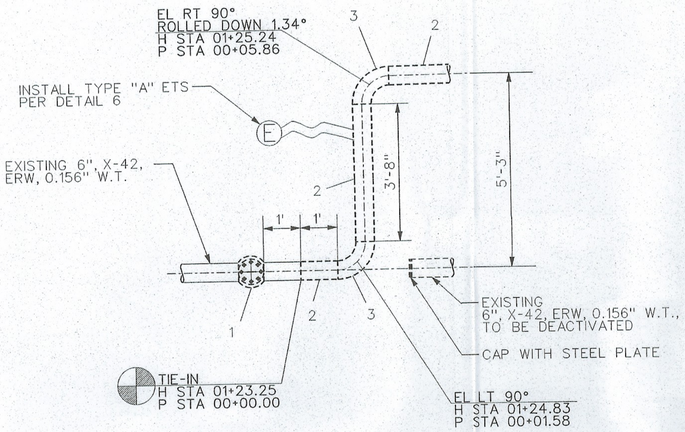

DETAIL 1/3
SCALE: 1/2" = 1'

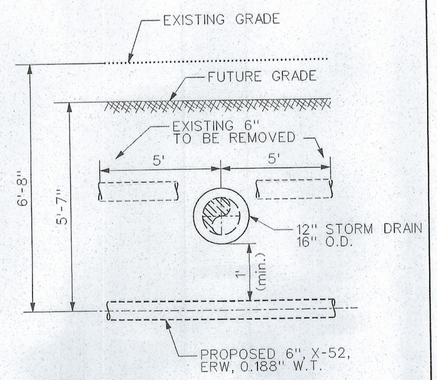

DETAIL 2/3
SCALE: 1/2" = 1'

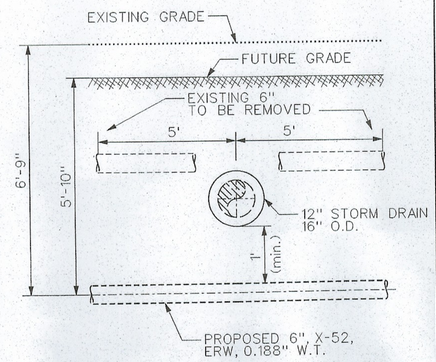

DETAIL 3/3
SCALE: 1/2" = 1'

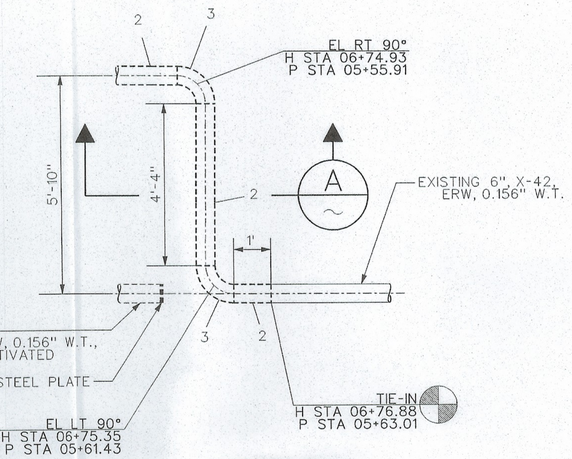

DETAIL 4/3
SCALE: 1/2" = 1'

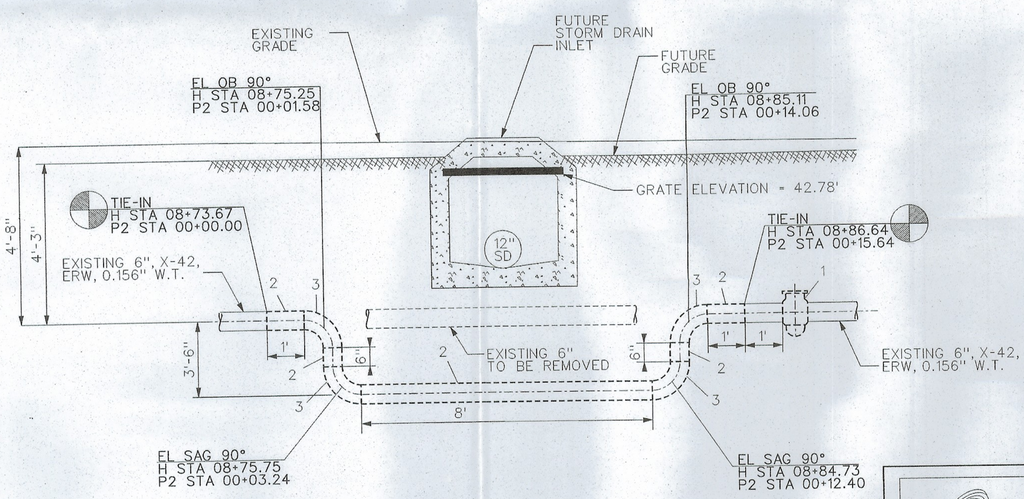

DETAIL 5/3
SCALE: 1/2" = 1'

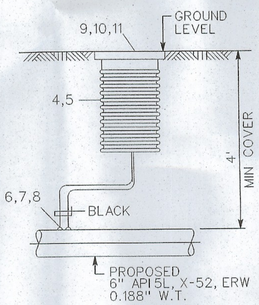

DETAIL 6/~
NOT TO SCALE
ETS TYPE "A"
FRAME & COVER
GAS STD. 0-10

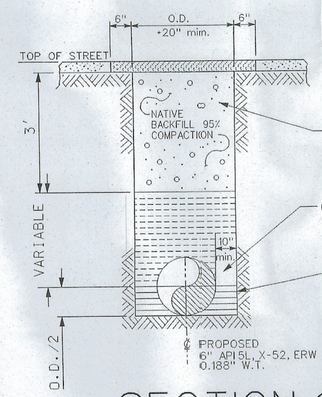

***BACKFILL WITH MATERIALS EQUAL TO OR BETTER THAN THE EXISTING PAVEMENT AND BASE IN QUALITY. NEW PAVEMENT SHALL BE 1" THICKER THAN EXISTING PAVEMENT, MIN. OF 0.25 FEET. NEW BASE SHALL BE 1" THICKER THAN EXISTING BASE, MIN. OF 0.5 FEET.

COMPACTION IN 12" MAX. LAYERS TO A MIN. RELATIVE COMPACTION OF 95% UNDER PAVEMENT.

COMPACT IN 24" MAX. LAYERS TO A MIN. RELATIVE COMPACTION OF 85%.

COMPACT IN 6" LAYERS TO A MIN. RELATIVE COMPACTION OF 90%.

SECTION A/~
NOT TO SCALE
"T" TYPE TRENCH
PAVED AREA

SAFETY

SAFETY PLEDGE

I ALWAYS PUT SAFETY FIRST.
I LOOK FOR AND ACT TO
RESOLVE UNSAFE SITUATIONS.
I HELP AND ENCOURAGE
OTHERS TO ACT SAFELY.

REGISTERED PROFESSIONAL ENGINEER
RYAN J. WEBER
M34034
EXP. 06/10
MECHANICAL
STATE OF CALIFORNIA

PSRS* 19216

NO.	DATE	DESCRIPTION	GM/SPEC	DWN	CHKD	SUPV	APVD BY
1	6-25-08	ISSUED TO CONSTRUCTIOIN	30623013	KJT	MAN	LXN	

REVISIONS

APPROVED BY	
GM	30623013
SUPV	LXN
DSGN	KJT
DWN	KJT
CHKD	MAN
OK	
DATE	6-25-08
SCALES	

RELOCATE - DFM 1614-04 MP 0.24-0.47
INSTALL 580' OF 6" PIPE
LOWER SACRAMENTO RD. N/O TURNER RD.
SAN JOAQUIN COUNTY

PACIFIC GAS AND ELECTRIC COMPANY
WALNUT CREEK , CALIFORNIA

MICROFILM
BILL OF MATL SHEET 2
DWG LIST
SUPSDS
SUPSD BY
SHEET NO. 4 OF 4 SHEETS
30623013 1

...\30623013\DGN\LowerSacRd.dgn 6/18/2008 7:21:18 AM

FILE 80-SD