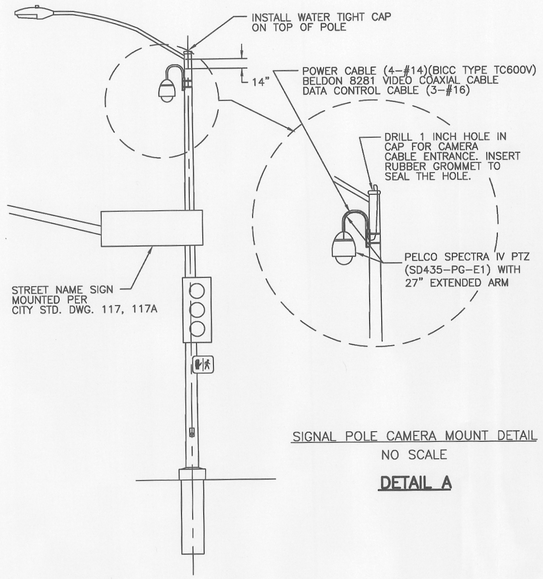

SIGNAL POLE CAMERA MOUNT DETAIL
NO SCALE

DETAIL A

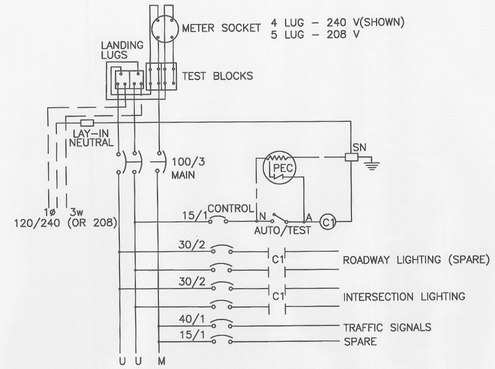

TYPE III–AF SERVICE WIRING DIAGRAM
NO SCALE

DETAIL B

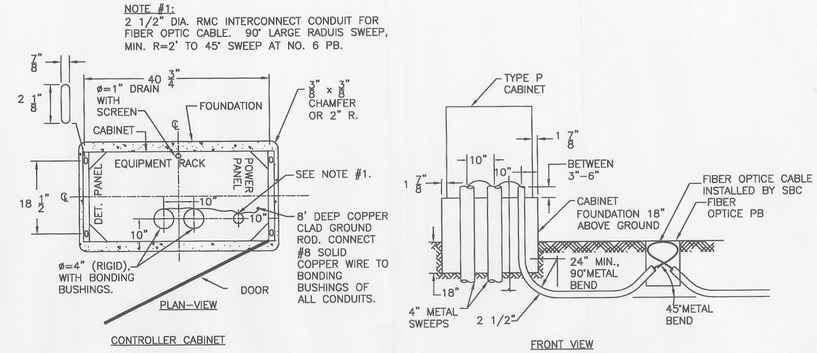

CONTROLLER CABINET AND SERVICE CABINET LOCATION GUIDELINES
NO SCALE

DETAIL C

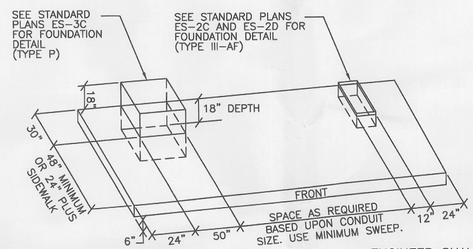

CONTROLLER WALKWAY
NO SCALE

DETAIL E

ENGINEER SHALL FIELD VERIFY CONTROLLER WALKWAY. CONTROLLER WALKWAY SHALL BE DESIGNED AS FIELD CONDITIONS DICTATE.

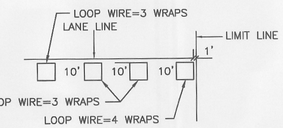

NOTE:
5'X5' LOOPS FOR 11' LANES AND NARRWER.
6'X6' LOOPS FOR LANES WIDER THAN 11'.
ALL SAMPLER AND ADVANCE LOOPS SHALL BE 6'X6'.
TWO LOOP SET FOR DELAY, BOTH LOOPS 4 WRAPS.

DETECTOR PLACEMENT
DETAIL (TYPICAL)
NO SCALE

DETAIL F

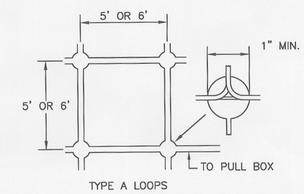

DETECTOR INSTALLATION
DETAIL–DRILLED CORNERS
NO SCALE

DETAIL G

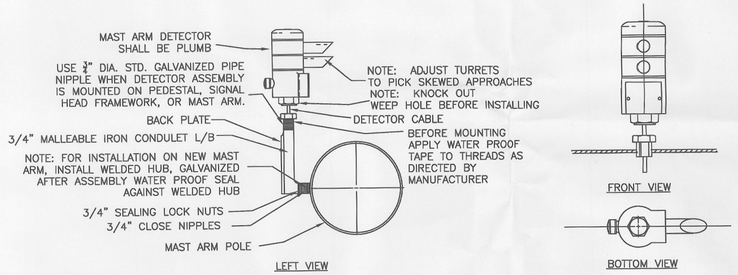

OPTICOM DETECTOR MAST ARM MOUNTING
NO SCALE

DETAIL D

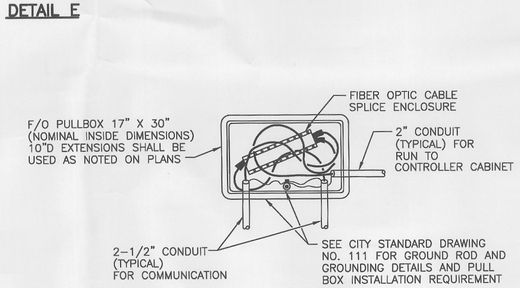

NOTE: FACTORY SWEEPS AND BENDS SHALL BE USE INTO AND OUT OF FULL BOXES. FIELD BENDS ARE PROHIBITED (45° SWEEPS TO BE RIGID CONDUIT WITH NON–METALLIC CAPS)

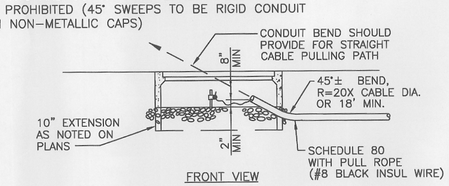

FIBER OPTIC (F/O) PULLBOX AND CONDUIT INSTALLATION DETAILS
NO SCALE

DETAIL I

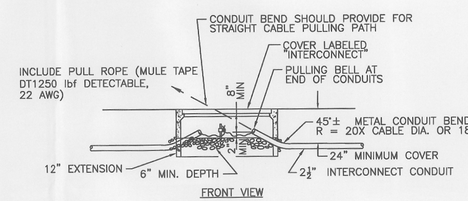

NO. 6 INTERCONNECT PULL BOX AND CONDUIT
INSTALLATION DETAILS
NO SCALE

DETAIL J

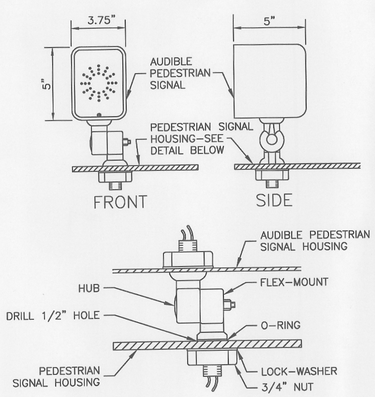

NOTE:
AUDIBLE PEDESTRIAN SIGNAL UNITS SHALL BE SUPPLIED AND INSTALLED ON ALL PEDESTRIAN SIGNAL HEADS. THE UNITS SHALL BE: 1). CAPABLE OF OUTPUTTING A MINIMUM OF 90db @ 1–WATT/METER AND AUTOMATIC SELF–ADJUSTMENT OF OUT PUT VOLUME DEPENDING ON AMBIENT NOISE CONDITIONS; AND 2). FIELD ADJUSTABLE FOR VOLUME CONTROL AND THE SELECTION OF EITHER "CUCKOO" OR A "PEEP–PEEP" TYPE SIGNAL. THE UNITS SHALL BE MOUNTED ON TOP OF THE STANDARD PED SIGNAL HEAD WITH THE FACE OF THE UNIT TIPPED DOWNWARD SUCH THAT IT IS DIRECTED TOWARD A POINT CENTERED IN THE CROSSWALK, AND FIVE FEET ABOVE THE EDGE OF PAVEMENT ON THE OPPOSITE SIDE OF THE ROADWAY. MOUNTING OF THE UNITS SHALL CONFORM TO THE MANUFACTURER'S RECOMMENDATIONS.

AUDIBLE PEDESTRIAN SIGNAL MOUNTING DETAIL
NO SCALE

DETAIL H

FOR PLANCHECK REVIEW ONLY
NOT FOR CONSTRUCTION

CALL BEFORE YOU DIG 1-800-227-2600 UNDERGROUND SERVICE ALERT

REGISTERED PROFESSIONAL ENGINEER SUZANNE L. LUCKEY 63058 CIVIL STATE OF CALIFORNIA
PRELIMINARY NOT FOR CONSTRUCTION

FEHR & PEERS TRANSPORTATION CONSULTANTS
160 W. Santa Clara St. Suite 675 San Jose, CA 95113 (408) 278-1700
Walnut Creek, CA · Orange County, CA · Roseville, CA · Los Angeles County, CA · San Jose, CA · Salt Lake City, UT · San Francisco, CA · Reno, NV · Sacramento, CA · Denver, CO · Seattle, WA

IMPROVEMENT PLANS
OPUS LOGISTICS CENTER
ELECTRICAL DETAILS
ARCH ROAD & LOGISTICS DRIVE

DEPARTMENT OF PUBLIC WORKS
CITY OF STOCKTON, CALIFORNIA

REVISION NO.	DESCRIPTION	DATE	BY	APPROVED

SCALE:	AS NOTED	APPROVED BY: DATE:	SHEET N
DESIGNED BY:	RMW		E–8
DRAWN BY:	DD		OF 8 SH
CHECKED BY:	SLL		PROJEC
RECORD DWG:		CITY ENGINEER STOCKTON, CALIFORNIA	A07

Aug 29, 2008 CADD FILE: N:\Projects\SJ-08_1021_Opus_Logistics_Center\CAD\Working_Drawings\Interim – Amend 1\1021_Interim-E-2_F-3_E-8.dwg
Fehr & Peers, its employees, its officers or agents shall not be responsible for the accuracy or completeness of electronic copies of this plan sheet.