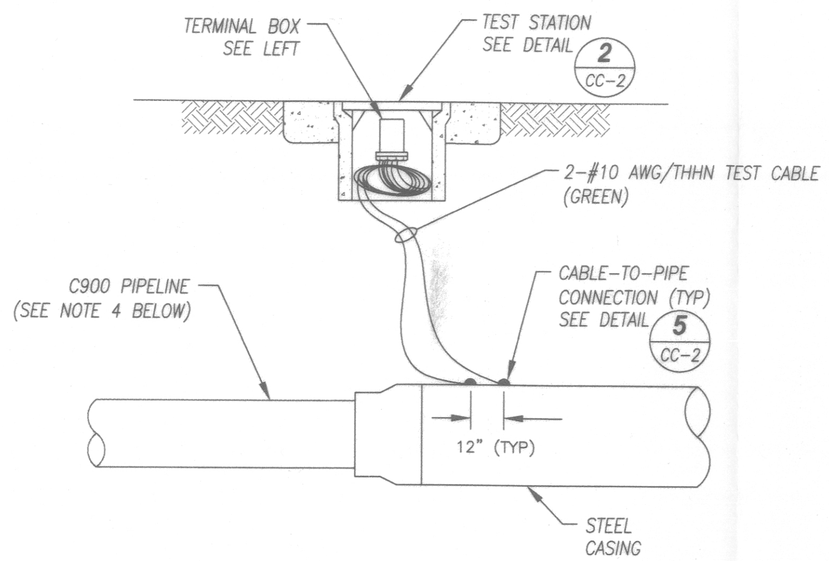

NOTES:
1. THE CTS SHALL BE INSTALLED AT A SUITABLE LOCATION, ACCESSIBLE FOR FUTURE MONITORING AND MAINTENANCE.

1/CC-2 CASING - TEST STATION INSTALLATION
NOT TO SCALE

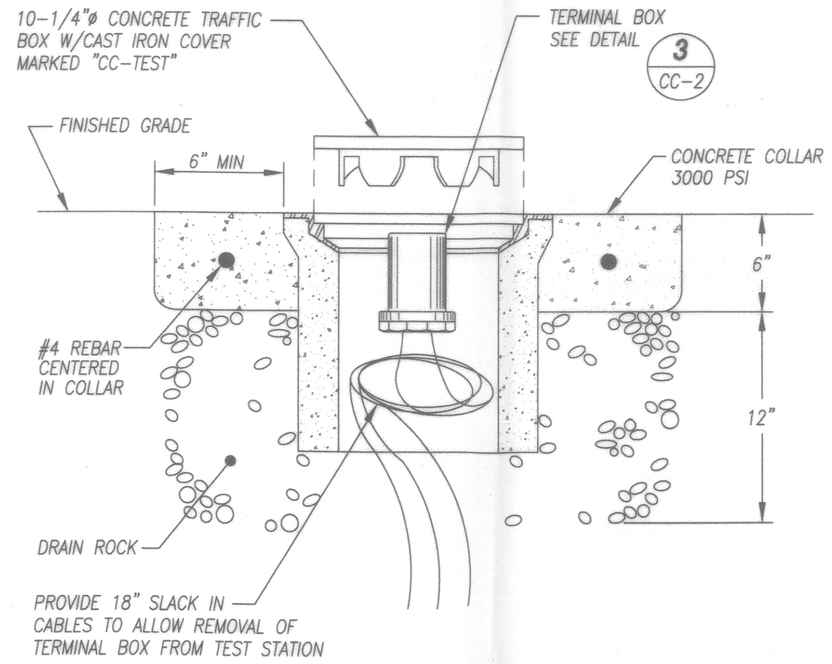

NOTES:
1. IF TEST STATION IS LOCATED IN SIDEWALK, CONCRETE PAD, OR AC PAVING, CONCRETE COLLAR MAY BE OMITTED.
2. INSTALL TEST STATIONS IN NON-TRAFFIC AREAS, ACCESSIBLE FOR FUTURE TESTING.

2/CC-2 FLUSH MOUNTED TEST STATION CONCRETE BOX
NOT TO SCALE

FINISHED GRADE

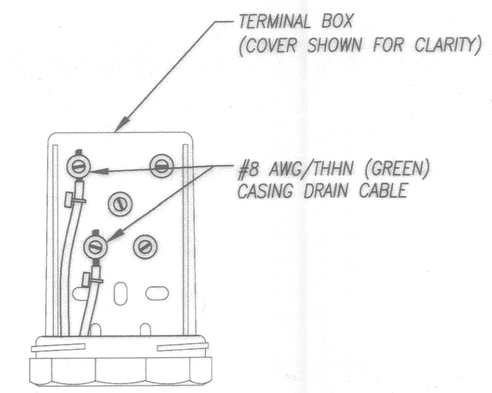

NOTES:
1. IDENTIFY ALL CABLES PER DETAIL 4/CC-2.

3/CC-2 TEST STATION TERMINAL BOX
NOT TO SCALE

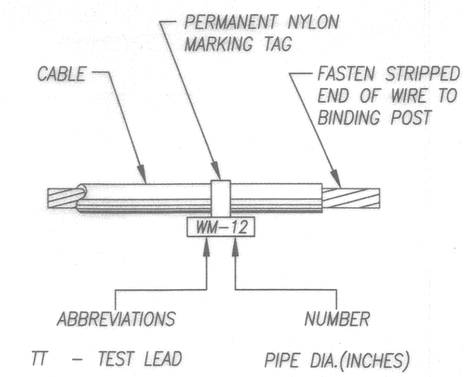

4/CC-2 CABLE IDENTIFICATION
NOT TO SCALE

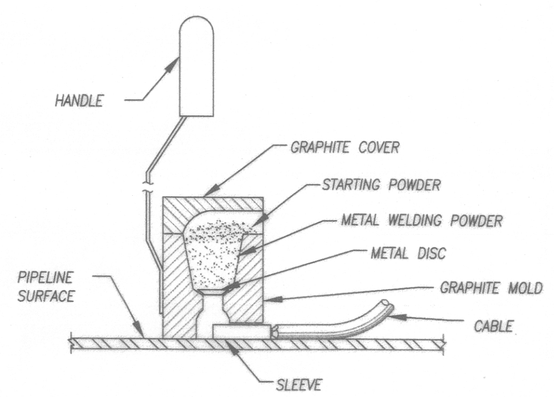

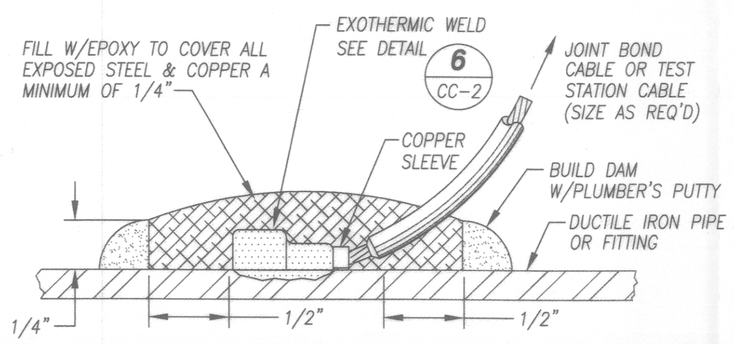

NOTES:
1. EACH EXOTHERMIC WELD CONNECTION SHALL CONTAIN NO MORE THAN ONE WIRE END. EXOTHERMIC WELD CONNECTIONS SHALL BE AT LEAST 6 INCHES CLEAR OF THE NEAREST EXOTHERMIC WELD.
2. DO NOT USE EXOTHERMIC WELDS ON BRASS OR COPPER PIPING.

5/CC-2 CABLE-TO-PIPE CONNECTION
NOT TO SCALE

STEP 1. FILE STRUCTURE CONNECTION AREA TO BARE SHINY METAL AND CLEAN.

STEP 2. STRIP INSULATION FROM WIRE. ATTACH SLEEVE REQUIRED ON #6 AWG WIRE OR SMALLER

STEP 3. HOLD MOLD FIRMLY WITH OPENING AWAY FROM OPERATOR AND IGNITE WITH FLINT GUN.

STEP 4. REMOVE SLAG FROM CONNECTION AND PEEN WELD FOR SOUNDNESS.

STEP 5. COVER CONNECTION AND EXPOSED STRUCTURE SURFACE WITH EPOXY COATING COMPOUND PER DETAIL 5/CC-2.

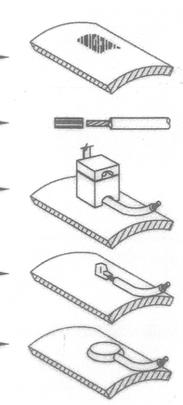

NOTE:
PROCEDURE SHOWN ABOVE IS TO BE USED AS A GENERAL GUIDE ONLY.
CONSULT MANUFACTURER'S LITERATURE FOR SPECIFIC INSTALLATION INSTRUCTIONS.

6/CC-2 EXOTHERMIC WELD PROCEDURE
NOT TO SCALE

FIELD SURVEY PERFORMED: 1-13-10
SUPPLEMENTAL FIELD SURVEY PERFORMED: 3-22-10

NOTES:
1. ALL EXISTING UTILITIES WERE PLOTTED FROM RECORD INFORMATION AND FIELD TOPOGRAPHY. ACTUAL LOCATIONS MAY VARY AND ADDITIONAL CROSSINGS MAY EXIST IN THE FIELD. IT IS IMPERATIVE THAT "U.S.A. LOCATING SERVICES" LOCATE AND MARK EXISTING UTILITIES PRIOR TO THE START OF EXCAVATION.
2. THE CONTRACTOR SHALL USE EXTREME CAUTION WHEN EXPOSING EXISTING UTILITY CROSSINGS AND SERVICES.
3. ANY DAMAGE TO EXISTING UTILITIES WILL BE THE SOLE RESPONSIBILITY OF THE CONTRACTOR.

CALL BEFORE YOU DIG
U.S.A.
800-227-2600

EIGHT MILE ROAD

REGISTERED PROFESSIONAL ENGINEER
STEPHEN ALI
No. CR 1035
Exp. June 30, 2011
CORROSION
STATE OF CALIFORNIA

REGISTERED PROFESSIONAL ENGINEER
BARRY HOWARD
No.CR001055
Exp. June 30, 2011
CORROSION
STATE OF CALIFORNIA

REV.NO.	DESCRIPTION	DATE	BY	APPVD.
0	ISSUED FOR REVIEW	5/10	SC	
1	REVISED PER CITY COMMENTS	7/10	SC	
1	AS BUILT	9/21	SC	

jdh corrosion consultants, inc.
1100 Willow Pass Court
Concord, CA 94520
Ph (925) 927-6630 Fax (925) 927-6634
JDHCorrosion.com

EIGHT MILE ROAD WATER MAIN

CORROSION MONITORING DETAILS I - EIGHT MILE ROAD

MUNICIPAL UTILITIES DEPARTMENT
CITY OF STOCKTON, CALIFORNIA

CHECKED BY: JDH	APPROVED BY: Jeff Williams	SHEET NO. CC-2
DESIGNED BY: SC	ASSISTANT DIRECTOR, MUNICIPAL UTILITIES DEPARTMENT	OF 2 SHEETS
DRAWN BY: SC	DATE: 9/29/10	JOB NO. 10032
DATE: 9/14/2010		
SCALE: NOT TO SCALE		

0998X