PS-12-01914

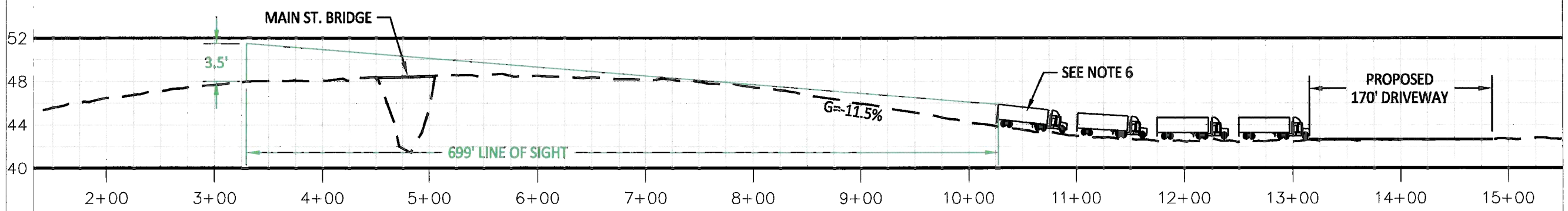

MAIN STREET PROFILE

SCALE: HORIZ: 1"=100'

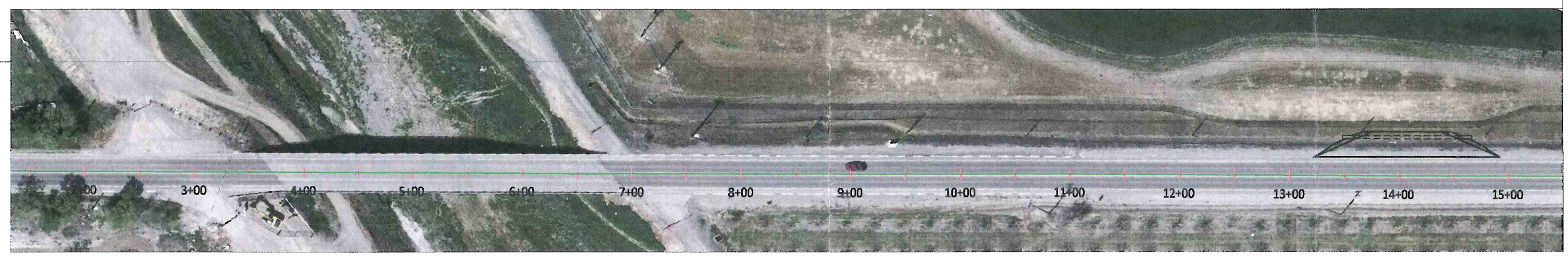

PLAN VIEW

SCALE: 1"=100'

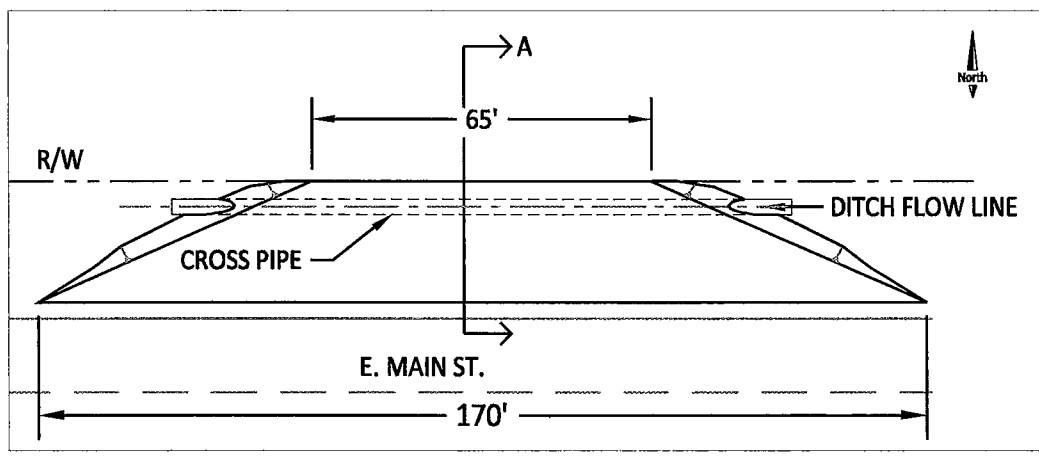

PROPOSED DRIVEWAY DETAIL

SCALE: 1"=35'

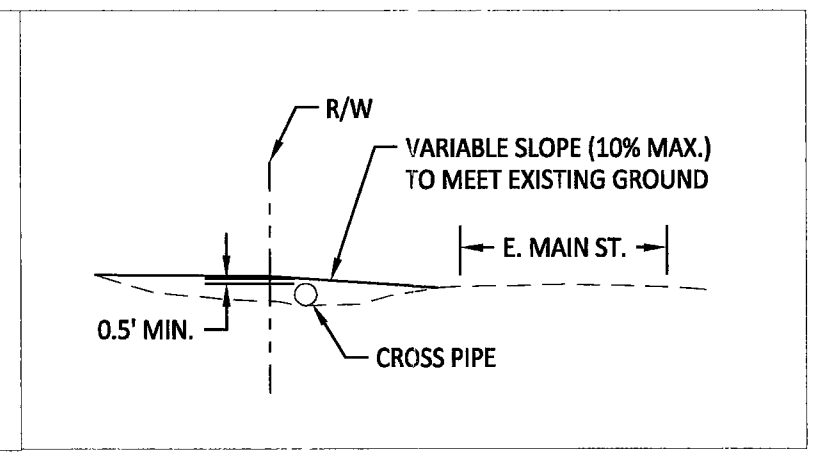

CROSS SECTION - A

SCALE: 1"=25'

NOTES:

1. FLOW LINE OF PIPE SHALL BE A MIN. OF 3" BELOW DITCH FLOW LINE AND A MAX. OF 1/2 DIAMETER OF PIPE, BELOW DITCH FLOWLINE.
2. WHEN CROSS PIPE IS USED, IT SHALL EXTEND A MINIMUM OF 2' PAST THE TOE OF FILL SLOPES OF THE DRIVEWAY ALL FILL SHALL BE COMPACTED TO 95% RELATIVE COMPACTION. MAXIMUM FILL SLOPE 2:1.
3. PIPES SHALL BE REINFORCED CONCRETE, OR 0.079" GALVANIZED CORRUGATED STEEL PIPE, THE SIZE VARIES ACCORDING THE HYDRAULIC REQUIREMENT.
4. UNDER WET CONDITIONS, AT THE DESIGN SPEED (55MPH) AND REACTION TIME OF PERCEPTION (Tp=2.5s) THE STOPPING DISTANCE IS ≈ 631ft.
5. APPROACH TO BE AT MINIMUM 2"A.C./ 6"A.B. PER SJC STD. DETAIL R-17
6. TRUCK DIMENSIONS SHOWN ARE 65 ft. LENGTH x 2' TALL.

NO.	DATE	BY	REVISION

STOCKTON EAST WATER DISTRICT
6767 EAST MAIN ST.
STOCKTON, CA

STOCKTON EAST WATER DISTRICT
10 MGD RESERVOIR
PAVED FRONTAGE ENCROACHMENT PERMIT

DRAWN BY: C. SOLORIO
DESIGNED BY: J. BEJARANO
APPROVED BY: NAME
SCALE:
DWG. CURRENT AS OF: 7/20/2012
PROJECT NO: 2011-005

SHEET 1 OF 2

PS-12-01914

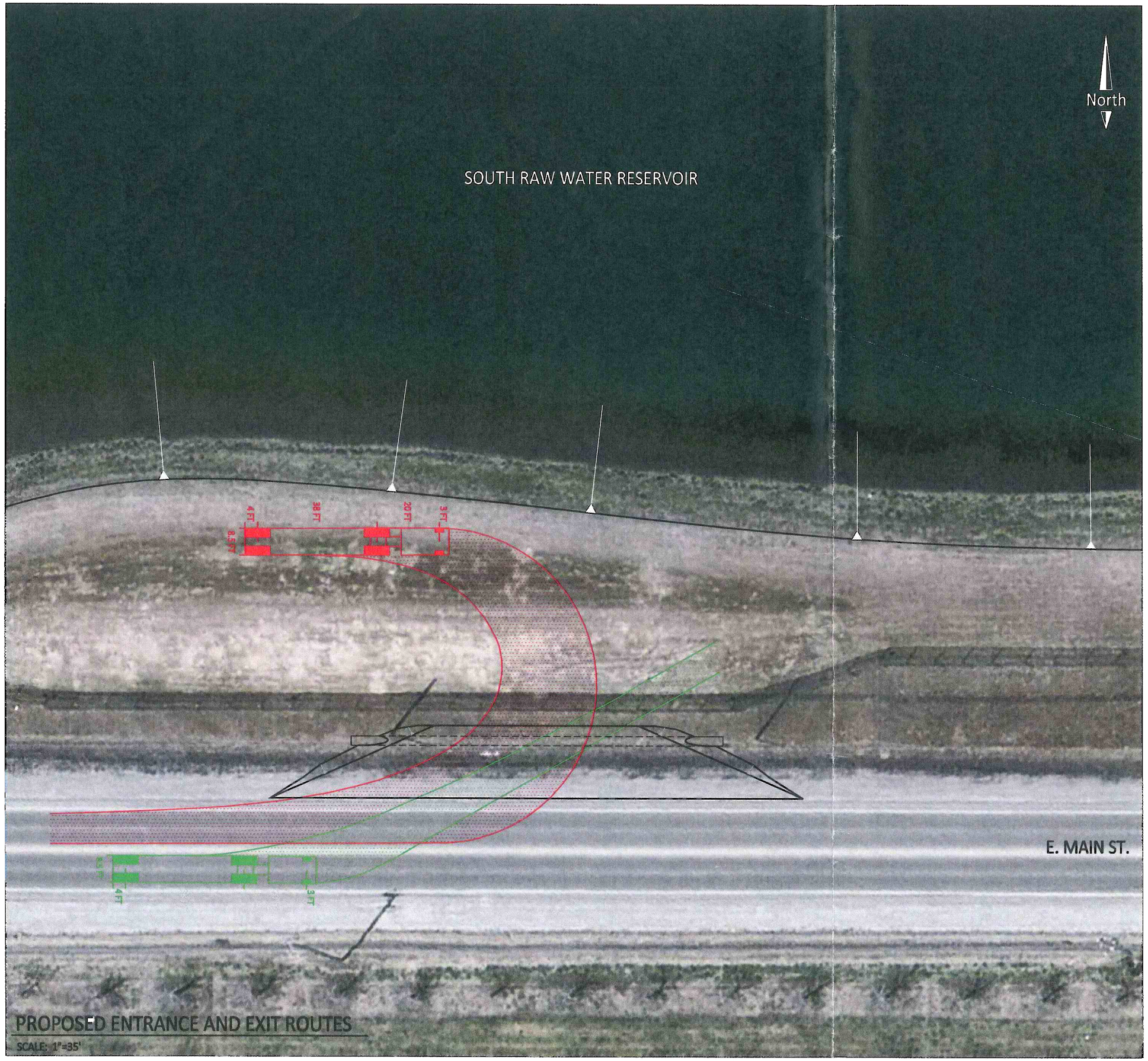

PROPOSED ENTRANCE AND EXIT ROUTES

SCALE: 1"=35'

LEGEND

- EXIT PATH
- ENTRANCE PATH

NO.	DATE	BY	REVISION

STOCKTON EAST WATER DISTRICT
6767 EAST MAIN ST.
STOCKTON CA

STOCKTON EAST WATER DISTRICT
10 MGD RESERVOIR
PAVED FRONTAGE ENCROACHMENT PERMIT

DRAWN BY:	C SOLORIO
DESIGNED BY:	J. BEJARANO
APPROVED BY:	NAME
SCALE:	
DWG. CURRENT AS OF:	7/20/2012
PROJECT NO.	2011-005

SHEET 2 OF 2

PS-12-01914

SITE PLAN
NO SCALE

150' 50' 0 150' 300'
100' 1"=150'

NOTES:

1. CONTRACTOR TO TAKE EXTRAORDINARY PRECAUTION WHEN WORKING AROUND THE EXIST 42" PIPELINE AND THE EXIST 18" TRANSITE PIPELINE. NO EXCAVATION, OR RIPPING, AND LIMIT TRAVEL IN THE VICINITY. CONTRACTOR SHALL LOCATE THESE PIPELINES BEFORE COMMENCING CONSTRUCTION.
2. REMOVE, SALVAGE, AND REPLACE EXISTING FENCE AS REQUIRED. CONTRACTOR TO UTILIZE TEMPORARY FENCING PRIOR TO INSTALLATION OF PERMANENT FENCING.
3. FIELD VERIFY GATE LOCATION W/OWNER AND SUBMIT TRAFFIC CONTROL PLAN FOR APPROVAL.
4. AREA C2 REPRESENTS AN ALTERNATIVE STOCKPILE LOCATION ON THE BOZANO PROPERTY LOCATED 1850'± TO THE NORTHWEST OF SEWD PROPERTY.
5. CONSTRUCTION VEHICLES AND HAULING VEHICLES PROHIBITED ON ROADS.

EXISTING
10 MG RESERVOIR PROJECT
STAGING AREAS

DATE	REVISIONS AND RECORD OF ISSUE	NO.	BY	CK	APP

PW FLDR: 172263 ... (80.3130 CIVIL DRAWINGS-PIPING.dwg
PW FILE: CY102.dwg XREF1:S-FWRES-ROOF01.dwg
SAVED: CA851124, 4/28/2011 11:35:29 AM XREF2:M-FWRES-PLAN00.dwg
PLOTTED: CA851124, 4/28/2011 11:45:57 AM XREF3:C-SITE-LAYOUT.dwg
USER: CA851124 DWG VER: 1000 XREF4:M-FWRES-PLAN01.dwg

REGISTERED PROFESSIONAL ENGINEER ALEX S. CHRISTENSEN No. C 71130 Exp. 12/31/12 CIVIL STATE OF CALIFORNIA

BLACK & VEATCH
Building a world of difference.
Black & Veatch Corporation
Walnut Creek, California

STOCKTON EAST WATER DISTRICT
DJWWTP 10MG RESERVOIR PROJECT

CIVIL
OVERALL SITE PLAN

DESIGNED: ASC
DETAILED: FJC
CHECKED: KCH
APPROVED: LAJ
DATE: 04/29/2011

0 1/2 1
IF THIS BAR DOES NOT MEASURE 1" THEN DRAWING IS NOT TO FULL SCALE

PROJECT NO.
172263

CY102
SHEET
11 OF 61

P3101633
D172263