QUIKRETE

Concrete Repair

No. 8620-10, 8620-13

QUIKRETE® Concrete Repair is a superior acrylic latex formulation for crack repair in concrete, including concrete, stucco or masonry walls, sidewalks, patios, driveways.

- Dries quickly to a tough and flexible finish
- Helps prevent water and ice damage to concrete surfaces.
- weather resistant
- Excellent Adhesion
- Textured to blend with concrete surfaces
- Easy clean up with water before product dries

Uses: Repairs and fills cracks up to ½" (12 mm) wide in concrete, masonry, stucco, sidewalks, patios, and driveways.

Packaging: QUIKRETE® Concrete Repair is available in 10-fl. oz. (296 ml) caulking tubes and 5.5-fl. oz (163ml) squeeze tubes.

Coverage:

- 10 fl-oz. tubes yield about 24 lineal ft. (7.4 M) for 1/4" (6 mm) diameter bead or 12 lineal ft. (3.7 M) for a 3/8" (9 mm) diameter bead.
- 5.5 fl-oz. Tubes yield about 12 lineal feet (3.7 M) at a 1/4" (6 mm) diameter bead.

Directions: Surface must be clean, dry, free of grease, dust, or loose particles. Remove all loose stones and chips from the crack before filling.

(1) Cut tip of spout on angle to make a ¼" (6 mm) to 3/8" (9 mm) hole. (2) Use cartridge in standard caulking gun. Apply by pushing cartridge tip over surface and forcing bead of Concrete Repair deep into the crack. Apply no thicker than 3/8" (9 mm) at a time. On horizontal surfaces, deep cracks can be partially filled with sand prior to application. (3) Concrete Repair can be tooled to smooth the surface. (4) Excess Concrete Repair can be wiped off with a damp cloth. (5) Wait at least 24 hours before painting. Use latex paints only. Air and surface temperature should be above 40°F/4°C for proper application. (6) Do not apply if rain threatens or is predicted within 12 hours.

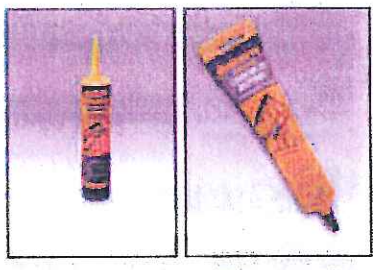

Caution: May cause eye, skin and respiratory irritation. Avoid contact with eyes, skin and clothing. Avoid breathing vapor. Use only with adequate ventilation. Ingestion may cause irritation. Store between 35 °F (2°C) and 100 °F (38°C).

Warranty

The QUIKRETE® Companies warrant this product to be of merchantable quality when used or applied in accordance with the instructions or applied in accordance with the instructions herein. The product is not warranted as suitable for any purpose or use other than the general purpose for which it is intended. Liability under this warranty is limited to the replacement of its product (as purchased) found to be defective, or at the shipping companies' option, to refund the purchase price. In the event of a claim under this warranty, notice must be given to The QUIKRETE® Companies in writing at Atlanta, GA 30305. The limited warranty is issued and accepted in lieu of all other express warranties and expressly excludes liability for consequential damages.

The QUIKRETE® Companies, Inc.
One Securities Centre
3490 Piedmont Road, Suite 1300
Atlanta, GA 30305
404.634.9100

QUIKRETE

Blacktop Repair

No. 8630-10, 8630-15

Product Description
Textured acrylic caulking material colored to match Blacktop. Used to fill ¼" to ½" wide cracks in asphalt driveways.

Limitations
Do not apply when temperatures are below 50 °F (10 °C) or if rain threatens or is predicted within 12 hours.

Sizes:
QUIKRETE® Acrylic Blacktop Repair is packaged in 10 fl-oz (296 ml) caulking tubes and 5.5 fl-oz. (163 ml) squeeze bottles.

Color:
QUIKRETE® Acrylic Blacktop Repair is black to match asphalt surfaces.

TECHNICAL DATA
QUIKRETE® Acrylic Blacktop Repair is a water-resistant acrylic formula that stays flexible. It is textured to blend with blacktop surfaces, has minimal shrinkage, excellent adhesion, and is non-flammable

Directions: Surface must be clean, dry, free of grease, dust, or loose particles. Remove all loose stones and chips from the crack before filling.

(1) Cut tip of spout on angle to make a 1/4" (6 mm) to 3/8" (9 mm) hole. (2) Use cartridge in standard caulking gun. Apply by pushing cartridge tip over surface and forcing bead of Blacktop Repair deep into the crack. Apply no thicker than 3/8" (9 mm) at a time. On horizontal surfaces, deep cracks can be partially filled with sand prior to application. (3) Blacktop Repair can be tooled to smooth the surface. (4) Excess Blacktop Repair can be wiped off with a damp cloth. (5) Wait at least 24 hours before painting. Use latex paints only. Air and surface temperature should be above 40°F/4°C for proper application. (6) Do not apply if rain threatens or is predicted within 12 hours.

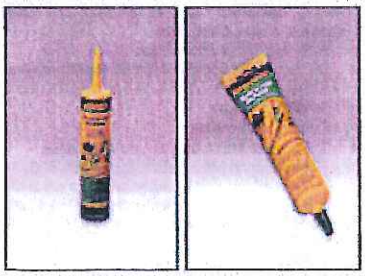

Caution: May cause eye, skin and respiratory irritation. Avoid contact with eyes, skin and clothing. Avoid breathing vapor. Use only with adequate ventilation. Ingestion may cause irritation. Store between 35°F (2°C) and 100°F (38°C).

Warranty
The QUIKRETE® Companies warrant this product to be of merchantable quality when used or applied in accordance with the instructions or applied in accordance with the instructions herein. The product is not warranted as suitable for any purpose or use other than the general purpose for which it is intended. Liability under this warranty is limited to the replacement of its product (as purchased) found to be defective, or at the shipping companies' option, to refund the purchase price. In the event of a claim under this warranty, notice must be given to The QUIKRETE® Companies in writing at Atlanta, GA 30305. The limited warranty is issued and accepted in lieu of all other express warranties and expressly excludes liability for consequential damages.

The QUIKRETE® Companies, Inc.
One Securities Centre
3490 Piedmont Road, Suite 1300
Atlanta, GA 30305
404.634.9100

MATERIAL SAFTEY DATA SHEET

QUIKRETE

CEMENT & CONCRETE PRODUCTS™

ACRYLIC CRACK FILLERS

MATERIAL SAFETY DATA SHEET
(Complies with OSHA 29 CFR 1910.1200)

SECTION I: PRODUCT IDENTIFICATION

The QUIKRETE® Companies
One Securities Centre
3490 Piedmont Road, Suite 1300
Atlanta, GA 30329

Emergency Telephone Number
(770) 216-9580

Information Telephone Number
(770) 216-9580

MSDS W3
Revision: Feb-07

QUIKRETE® Product Name	Product #
BLACKTOP REPAIR	8630-10
MORTAR REPAIR	8620-09
CONCRETE REPAIR	8620-10

HEALTH	1
FLAMMABILITY	0
PHYSICAL HAZARD	0

PERSONAL PROTECTION
Safety Glasses, Gloves

PRODUCT USE: COSMETIC CRACK FILLER FOR CONCRETE OR ASPHALT

SECTION II - HAZARD IDENTIFICATION

Route(s) of Entry: Inhalation, ingestion, skin
Acute Exposure: Inhalation of vapor or mist can cause the following: headache, nausea, irritation of nose, throat and lungs. Direct contact with eyes can cause irritation and possible corneal injury.
Chronic Exposure: None known
Carcinogenicity: Not carcinogenic
Carcinogenicity Listings: Not applicable
Medical Conditions Generally Aggravated by Exposure: None known

SECTION III - HAZARDOUS INGREDIENTS/IDENTITY INFORMATION

Hazardous Components	CAS No.	PEL (OSHA) mg/M³	TLV (ACGIH) mg/M³
Limestone/Marble	1317-65-3	5	5
Acrylic Polymer	Not Hazardous	None	None
May contain:			
Titanium Dioxide	13463-67-7	15	10

QUIKRETE

CEMENT & CONCRETE PRODUCTS™

MATERIAL SAFTEY DATA SHEET

SECTION IV – First Aid Measures

Eyes: Immediately flush eye thoroughly with water – do not rub eyes. Continue flushing eye for at least 15 minutes, including under lids, to remove all particles. Call physician immediately.
Skin: Wash skin with cool water and pH-neutral soap or a mild detergent. Seek medical treatment if irritation or inflammation develops or persists.
Inhalation: Remove person to fresh air. If coughing and other symptoms develop, seek medical attention.
Ingestion: If swallowed, give two glasses of water; if large amounts are ingested, induce vomiting. Never give anything by mouth to an unconscious person. Get medical attention.

SECTION V - FIRE AND EXPLOSION HAZARD DATA

Flammability: Noncombustible and not explosive.
Auto-ignition Temperature: Not Applicable
Flash Points: Product may contain less than 1% of a solvent with a Flash Point of 120°C (248°F)
Unusual Hazards: This water-based dispersion can splatter at temperatures above 100°C (212°F). Polymer film can burn once the water has evaporated.

SECTION VI – ACCIDENTAL RELEASE MEASURES

Contain spills immediately with inert materials (eg. Sand, earth). Scrape up and allow to harden before disposal. Use detergent and water to remove the remaining residue.

SECTION VII - PRECAUTIONS FOR SAFE HANDLING AND STORAGE

Keep from freezing; material may coagulate. The minimum recommended storage temperature for this material is 1°C (34°F). The maximum recommended storage temperature for this material is 38°C (100°F).

SECTION VIII – EXPOSURE CONTROL MEASURES

Engineering Controls: Not applicable

Personal Protection: The use of neoprene gloves is recommended.

Exposure Limits: Consult local authorities for acceptable exposure limits

SECTION IX - PHYSICAL/CHEMICAL CHARACTERISTICS

Appearance: White or tinted viscous liquid.
Boiling Point: ~100°C (212°F)

MATERIAL SAFTEY DATA SHEET

QUIKRETE

CEMENT & CONCRETE PRODUCTS™

Solubility In Water: Dilutable
Odor: slight ether and ammonia odor

SECTION X - REACTIVITY DATA

Stability: This material is considered stable. Avoid temperatures above 177°C (350°F), the onset of polymeric decomposition. Thermal decomposition is dependent on time and temperature.
Incompatibility (Materials to Avoid): Avoid contact with strong oxidizing agents or strong alkalis.
Hazardous Decomposition or By-products: Thermal decomposition may yield acrylic monomers
Hazardous Polymerization: Will Not Occur.
Condition to Avoid: Maintain storage temperature between 1°C (34°F) and 38°C (100°F) to retain product utility.

SECTION XI – TOXICOLOGICAL INFORMATION

Routes of Entry: Inhalation, Ingestion
Toxicity to Animals:
LD50: Not Available
LC50: Not Available
Chronic Effects on Humans: Not Available
Special Remarks on Toxicity: Not Available

SECTION XII – ECOLOGICAL INFORMATION

Ecotoxicity: Not Available
BOD5 and COD: Not Available
Products of Biodegradation: Not available
Toxicity of the Products of Biodegradation: Not available
Special Remarks on the Products of Biodegradation: Not available

SECTION XIII – DISPOSAL CONSIDERATIONS

Waste Disposal Method: The packaging and material may be land filled once hardened. This product is not classified as a hazardous waste under the authority of the RCRA (40CFR 261) or CERCLA (40CFR 117&302).

SECTION XIV – TRANSPORT INFORMATION

DOT/UN Shipping Name: Non-regulated
DOT Hazard Class: Non-regulated
Shipping Name: Non-regulated
Non-Hazardous under U.S. DOT and TDG Regulations

SECTION XV – OTHER REGULATORY INFORMATION

QUIKRETE

MATERIAL SAFTEY DATA SHEET

CEMENT & CONCRETE PRODUCTS™

US OSHA 29CFR 1910.1200: Considered hazardous under this regulation and should be included in the employers hazard communication program
SARA (Title III) Sections 311 & 312: Qualifies as a hazardous substance with delayed health effects
SARA (Title III) Section 313: Not subject to reporting requirements
TSCA (May 1997): All components are on the TSCA inventory list
Federal Hazardous Substances Act: Is a hazardous substance subject to statues promulgated under the subject act
Canadian Environmental Protection Act: Not listed
Canadian WHMIS: Considered to be a hazardous material under the Hazardous Products Act as defined by the Controlled Products Regulations and subject to the requirements of Health Canada's Workplace Hazardous Material Information (WHMIS). This product has been classified according to the hazard criteria of the Controlled Products Regulation (CPR). This document complies with the WHMIS requirements of the Hazardous Products Act (HPA) and the CPR.

SECTION XVI – OTHER INFORMATION

HMIS-III:

Health –
- 0 = No significant health risk
- 1 = Irritation or minor reversible injury possible
- 2 = Temporary or minor injury possible
- 3 = Major injury possible unless prompt action is taken
- 4 = Life threatening, major or permanent damage possible

Flammability-
- 0 = Material will not burn
- 1 = Material must be preheated before ignition will occur
- 2 = Material must be exposed to high temperatures before ignition
- 3 = Material capable of ignition under normal temperatures
- 4 = Flammable gases or very volatile liquids; may ignite spontaneously

Physical Hazard-
- 0 = Material is normally stable, even under fire conditions
- 1 = Material normally stable but may become unstable at high temps
- 2 = Materials that are unstable and may undergo react at room temp
- 3 = Materials that may form explosive mixtures with water
- 4 = Materials that are readily capable of explosive water reaction

Abbreviations:

ACGIH	American Conference of Government Industrial Hygienists
CAS	Chemical Abstract Service
CERCLA	Comprehensive Environmental Response, Compensation & Liability Act
CFR	Code of Federal Regulations
CPR	Controlled Products Regulations (Canada)
DOT	Department of Transportation
IARC	International Agency for Research
MSHA	Mine Safety and Health Administration
NIOSH	National Institute for Occupational Safety and Health
NTP	National Toxicity Program

QUIKRETE

MATERIAL SAFTEY DATA SHEET

CEMENT & CONCRETE PRODUCTS™

OSHA	Occupational Safety and Health Administration
PEL	Permissible Exposure Limit
RCRA	Resource Conservation and Recovery Act
SARA	Superfund Amendments and Reauthorization Act
TLV	Threshold Limit Value
TWA	Time-weighted Average
WHMIS	Workplace Hazardous Material Information System

Revision #07-01, supersedes all previous revisions.
Created: 10/25/2006
Last Updated: February 7, 2007

NOTE: The information and recommendations contained herein are based upon data believed to be correct. However, no guarantee or warranty of any kind, express or implied, is made with respect to the information contained herein. We accept no responsibility and disclaim all liability for any harmful effects which may be caused by exposure to silica contained in our products.

Appendix C

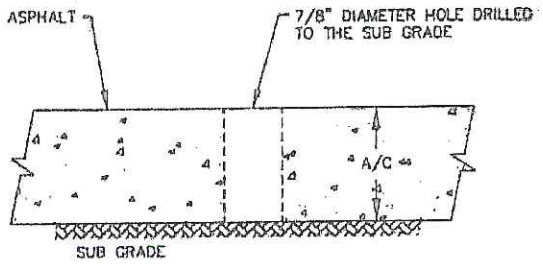

FIGURE 1: SCHEMATIC OF DRILLED HOLE

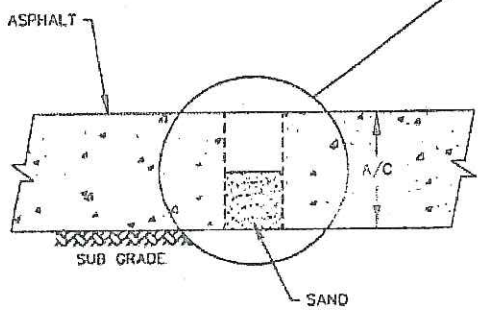

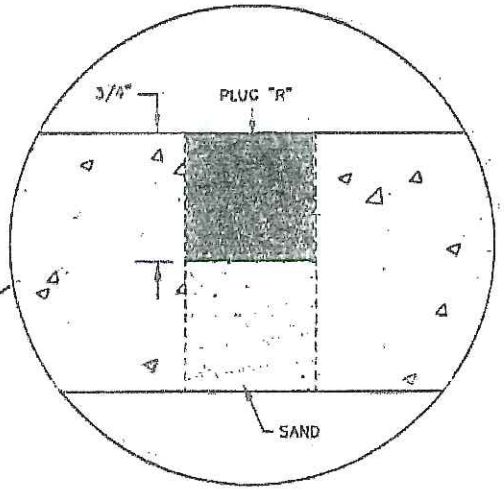

FIGURE 2: SCHEMATIC OF REPAIR AFTER TESTING

PROCEDURE FOR DRILLING HOLES FOR TESTING

TASK 1: DRILLING HOLES – DRILL A ⅞" HOLE THROUGH THE ASPHALT TO THE SUB GRADE. THE HOLES ARE DRILLED 10 FEET ON CENTERS OVER THE PIPELINE USING A PNEUMATIC DRILL WITH A ⅞" DRILL BIT.

TASK 2: CORROSION TESTING – A PROBE IS INSERTED INTO EACH HOLE. A PIPE TO SOILS POTENTIAL IS MEASURED AND RECORDED. THE PROBE IS REMOVED.

TASK 3: REPAIRING THE DRILLED HOLE – THE HOLES ARE FIRST FILLED WITH SAND SATURATED WITH WATER AND TAMPED WITH A ½" ROD TO PROVIDE A COMPACTED SOIL BASE TO ¾" BELOW A/C SURFACE. A "PLUG-R" SOLID PLUG IS THEN DRIVEN INTO HOLE UNTIL SECURE. THE PLUG IS MELTED TO GRADE MATCHING THE SURROUNDING ASPHALT COLOR LEAVING LITTLE TRACE THAT A HOLE WAS EVER DRILLED AT THE LOCATION.

DRILLING AND REPAIR PROCEDURE FOR ASPHALT/CONCRETE (A/C) DURING INDIRECT INSPECTION SURVEYS

Mears Group, Inc.

TYPICAL APPLICATION

For best results, keep PLUG-R® between 40 degrees and 80 degrees fahrenheit just before use. These limits assure that PLUG-R will not shatter from cold when hammered into the hole and will not soften from extreme heat. Extreme heat from a closed vehicle, hot storage area or direct sun will cause softness which makes PLUG-R® stick together.

PLUG-R

PERMANENT ASPHALT PLUGS

SIZE OF PLUG-R®

SIZE OF PLUG-R	APEX SIZE	BOTTOM DIAMETER	BOTTOM DIAMETER Metrid	TOP DIAMETER	APEX LENGTH	# PER CASE
3/4"	3/4"	3/4"	19 mm.	1"	1-1/2"	512
7/8"	1"	7/8"	22 mm.	1-1/4"	2-3/8"	320
1-1/8"	1-1/4"	1-1/8"	28 mm.	1-1/2"	2-3/8"	176
1-1/4"	1-1/2"	1-1/4"	32 mm.	1-3/4"	3"	112
1-1/2"	1-3/4"	1-1/2"	38 mm.	2"	3"	96
1-3/4"	2"	1-3/4"	44 mm.	2-1/8"	3"	96

CONTAINS:	NAME	CAS#
	ASPHALT	8052-42-4
	RECYCLED RUBBER	9006-04-6*
		61789-96-6*
	WAX	110-30-5
	MOLD RELEASE	61790-44-1
	COMPOUND	61789-30-8
		7732-18-5

KEEP OUT OF REACH OF CHILDREN

Select the PLUG-R® that will go three-quarters of the way into the hole before using force. (ex: use 1-1/8" PLUG-R for a 1-1/4" hole)

PLUG-R®'s are packed loose in cases. A special release material is used to keep them from sticking together.

Place a PLUG-R® in the hole, cover with a board and pound in with a hammer.

Then hit the PLUG-R® directly with the hammer to break off any excess asphalt. The PLUG-R® is now part of the pavement.

PLUG-R® U.S. Patent No. [illegible], Canadian Patent No. [illegible], [illegible] Patent No. [illegible]

PERMANENT ASPHALT PLUGS

MSDS INFORMATION

MATERIAL SAFETY DATA SHEET
[OSHA 29 CFR 1910.1200]

PACKAGE PAVEMENT
P.O. BOX 408
STORMVILLE, NY 12582

EMERGENCY TELEPHONE #
(800) 724-8193

INFORMATION TELEPHONE #
(845) 221-2224

REVISION: JANUARY 2007

MSDS PP

SECTION I: PRODUCT IDENTIFICATION

PACKAGE PAVEMENT™ - PRODUCT NAME

PI.UG-R® PERMANENTASPHALTPLUGS

'~IG·R

PERIIANENT ASPHALT PLU08

ITEM CODE(s)#	
(3/4")	106050
(7/S")	106100
(H/8")	106150
(1·1/.4")	106200
(1·1/2")	106300
(1·314")	106.400

SEcnoN II: HAZARDOUS INGREDIENTS/IDENTITY INFORMAIION

Hazardous Components	CAS No.	PEL(OSHA) mg/M'	nV(ACGIH) mg/M'
Palroleum Asphalt Fume	8052-42-4	Not Estcblished (1)	5mg/M'

(1) In 1997 the ACGH. proposed. lowering the exposure limit for pelroleum asphalt. to 0.5 mg/M'..

SECTION III: PHYSICAL/CHEMICAL CHARACTERISTICS

Boiling Point: (1) 500 F (260 C)
Vapor Pressure: -----
Solubility In Water: None
Specific Gravity: .98
Melting Point: (1) 200 F (93 C)
Evaporation Rate: None
Appearance and Odor: Black solid material with a hydrocarbon odor which diminishes over time.
(1) Properties of asphalt portion of the product.

SECTION IV: FIRE AND EXPLOSION HAZARD DATA

Flash Point (Method Used): 400 F+ (204 C) Minimum - (Cleveland Open Cup Method Used)
Flammable Limits: 600 F (316 C) **LEL:** N/A **VEL:** N/A
Extinguishing Media: Foam, Dry Chemical CO_2 Fire Extinguishers or water fog.
Special Fire Fighting Procedures: None
Unusual Fire and Explosion Hazards: If PLUG-R® 's are involved in a fire, do not use water or liquid as this can cause eruptions of the hot asphalt material.

SECTION V: REACTIVITY DATA

Stability: Stable
Incompatibility (Materials to Avoid): Do not allow hot molten product to contact water or liquids as this can cause violent eruptions.
Hazardous Decomposition or By-products: CO,CO_2 oxides of sulfur and various hydrocarbons.
Hazardous Polymerization: Will not occur

MSDS INFORMATION

PERMANENT ASPHALT PLUGS
MSDS PP

SECTION VI: HEALTH HAZARD DATA

Routes of Entry (Only During a Fire):

Inhalation?	N/A
Skin?	N/A
Ingestion?	N/A

Health Hazard Data
Carcinogenicity: No association has been established between industrial exposure to petroleum asphalt and cancer in humans. The International Agency for Research on Cancer (IARC) reviewed the carcinogenic potential for asphalts in monograph 35. They concluded that there was insufficient evidence that undiluted, air-refined asphalt was carcinogenic to animals, while there was only limited evidence that steam-refined asphalts were carcinogenic to animals. Additionally there was insufficient evidence to conclude that asphalts were carcinogenic to human beings. Studies in which mice were exposed to a variety of whole asphalts did not result in an increased cancer rate; mice exposed to asphalts diluted with hydrocarbon solvents had increased incidence of certain types of cancer. Brief or intermittent skin contact with this asphalt is not expected to produce any delayed effects.

Signs and Symptoms of Exposure: Upper respiratory tract; eye and skin irritation.
Medical Conditions Generally Aggravated by Exposure: N/A
Emergency and First Aid Procedure: N/A for normal usage of product.

SECTION VII: PRECAUTIONS FOR SAFE HANDLING AND USE

Steps to be Taken in Case Material is Released or Spilled: Dispose in regular garbage or return to manufacturer for re-use.
Waste Disposal Method: Follow local municipal laws.
Precautions to be Taken in Handling and Storage: Store out of hot sun because of possible softening or distortion of plugs.
Other Precautions: N/A

SECTION VIII: CONTROL MEASURES

Respiratory Protection: None Required.
Ventilation (Local Exhaust): Ambient
Protective Gloves: Rubber gloves to prevent blisters.
Eye Protection: Use OSHA approved protection glasses especially when hammering the PLUG-R® into place.
Other Protective Clothing or Equipment: N/A
Work/Hygienic Practices: Normal washing with soap and water after handling.

NOTE: The information and recommendations contained herein are based upon data believed to be correct. However, no guarantee or warranty of any kind, express or implied, is made with respect to the information contained herein.