SECTION VI: HEALTH HAZARD DATA

Routes of Entry (Only During a Fire):

Inhalation?	N/A
Skin?	N/A
Ingestion?	N/A

Health Hazard Data
Carcinogenicity: No association has been established between industrial exposure to petroleum asphalt and cancer in humans. The International Agency for Research on Cancer (IARC) reviewed the carcinogenic potential for asphalts in monograph 35. They concluded that there was insufficient evidence that undiluted, air-refined asphalt was carcinogenic to animals, while there was only limited evidence that steam-refined asphalts were carcinogenic to animals. Additionally there was insufficient evidence to conclude that asphalts were carcinogenic to human beings. Studies in which mice were exposed to a variety of whole asphalts did not result in an increased cancer rate; mice exposed to asphalts diluted with hydrocarbon solvents had increased incidence of certain types of cancer. Brief or intermittent skin contact with this asphalt is not expected to produce any delayed effects.

Signs and Symptoms of Exposure: Upper respiratory tract; eye and skin irritation.
Medical Conditions Generally Aggravated by Exposure: N/A
Emergency and First Aid Procedure: N/A for normal usage of product.

SECTION VII: PRECAUTIONS FOR SAFE HANDLING AND USE

Steps to be Taken in Case Material is Released or Spilled: Dispose in regular garbage or return to manufacturer for re-use.
Waste Disposal Method: Follow local municipal laws.
Precautions to be Taken in Handling and Storage: Store out of hot sun because of possible softening or distortion of plugs.
Other Precautions: N/A

SECTION VIII: CONTROL MEASURES

Respiratory Protection: None Required.
Ventilation (Local Exhaust): Ambient
Protective Gloves: Rubber gloves to prevent blisters.
Eye Protection: Use OSHA approved protection glasses especially when hammering the PLUG-R® into place.
Other Protective Clothing or Equipment: N/A
Work/Hygienic Practices: Normal washing with soap and water after handling.

NOTE: The information and recommendations contained herein are based upon data believed to be correct. However, no guarantee or warranty of any kind, express or implied, is made with respect to the information contained herein.

MSDS INFORMATION

MATERIAL SAFETY DATA SHEET
[OSHA 29 CFR 1910.1200]

PACKAGE PAVEMENT
P.O. BOX 408
STORMVILLE, NY 12582

EMERGENCY TELEPHONE #
(800) 724-8193

INFORMATION TELEPHONE #
(845) 221-2224

REVISION: JANUARY 2007

MSDS PP

SECTION I: PRODUCT IDENTIFICATION

PACKAGE PAVEMENT™ - PRODUCT NAME

PI.UG-R®ERMANENTASPHALTPLUGS

'~IG·R

PERIIANENT ASPHALT PLU08

ITEM CODE(s)#	
(3/4")	106050
(7/S")	106100
(H/8")	106150
(1·1/.4")	106200
(1·1/2")	106300
(1·314")	106.400

SEcnoN II; HAZARDOUS INGREDIENT5/IDENTrT'f INFORMAIION

Hazardous Components	CAS No.	P£L(OSHA) mg/M'	nV(ACGIH) mg/M'
Palroleum Asphalt Fume	8052·42-4	Not Estcblished (1)	5mg/M'

(1) In 1997 the ACGH. proposed. lowering the exposure limit for pelroleum asphalt. to 0.5 mg/M'..

SECTION III: PHYSICAL/CHEMICAL CHARACTERISTICS

Boiling Point: (1) 500 F (260 C)
Vapor Pressure: -----
Solubility In Water: None
Specific Gravity: .98
Melting Point: (1) 200 F (93 C)
Evaporation Rate: None
Appearance and Odor: Black solid material with a hydrocarbon odor which diminishes over time.
(1) Properties of asphalt portion of the product.

SECTION IV: FIRE AND EXPLOSION HAZARD DATA

Flash Point (Method Used): 400 F+ (204 C) Minimum - (Cleveland Open Cup Method Used)
Flammable Limits: 600 F (316 C) **LEL:** N/A **VEL:** N/A
Extinguishing Media: Foam, Dry Chemical CO_2 Fire Extinguishers or water fog.
Special Fire Fighting Procedures: None
Unusual Fire and Explosion Hazards: If PLUG-R® 's are involved in a fire, do not use water or liquid as this can cause eruptions of the hot asphalt material.

SECTION V: REACTIVITY DATA

Stability: Stable
Incompatibility (Materials to Avoid): Do not allow hot molten product to contact water or liquids as this can cause violent eruptions.
Hazardous Decomposition or By-products: CO,CO_2 oxides of sulfur and various hydrocarbons.
Hazardous Polymerization: Will not occur

For best results, keep PLUG-R® between 40 degrees and 80 degrees fahrenheit just before use. These limits assure that PLUG-R will not shatter from cold when hammered into the hole and will not soften from extreme heat. Extreme heat from a closed vehicle, hot storage area or direct sun will cause softness which makes PLUG-R® stick together.

PLUG-R
PERMANENT ASPHALT PLUGS

SIZE OF PLUG-R®

SIZE OF PLUG-R	APPROX. HOLE SIZE	BOTTOM DIAMETER	BOTTOM DIAMETER (Metric)	TOP DIAMETER	APPROX. LENGTH	# PER CASE
3/4"	3/4"	3/4"	19 mm.	1"	1-1/2"	512
7/8"	1"	7/8"	22 mm.	1-1/4"	2-3/8"	320
1-1/8"	1-1/4"	1-1/8"	28 mm.	1-1/2"	2-3/8"	176
1-1/4"	1-1/2"	1-1/4"	32 mm.	1-3/4"	2"	112
1-1/2"	1-3/4"	1-1/2"	38 mm.	2"	2"	96
1-3/4"	2"	1-3/4"	44 mm.	2-1/8"	2"	96

CONTAINS:	NAME	CAS#
	ASPHALT	8052-42-4
	RECYCLED RUBBER	9006-04-6* 61789-96-6*
	WAX	110-30-5
	MOLD RELEASE COMPOUND	61790-44-1 61789-30-8 77732-18-5

KEEP OUT OF REACH OF CHILDREN

Select the PLUG-R® that will go three-quarters of the way into the hole before using force. (ex: use 1-1/8" PLUG-R for a 1-1/4" hole)

PLUG-R®'s are packed loose in cases. A special release material is used to keep them from sticking together.

Place a PLUG-R® in the hole, cover with a board and pound in with a hammer.

Then hit the PLUG-R® directly with the hammer to break off any excess asphalt. The PLUG-R® is now part of the pavement.

PERMANENT ASPHALT PLUGS

PLUG-R® U.S. Patent No. 3,099,134, Canadian Patent No. 714,174, British Patent No. 1,000,222

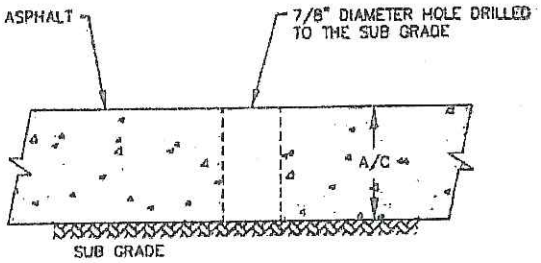

FIGURE 1: SCHEMATIC OF DRILLED HOLE

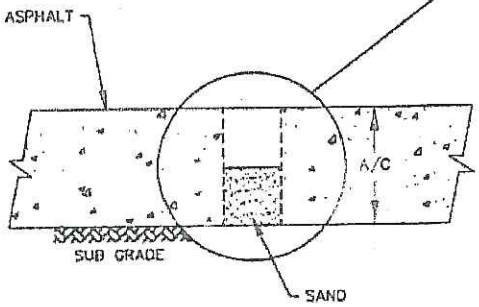

FIGURE 2: SCHEMATIC OF REPAIR AFTER TESTING

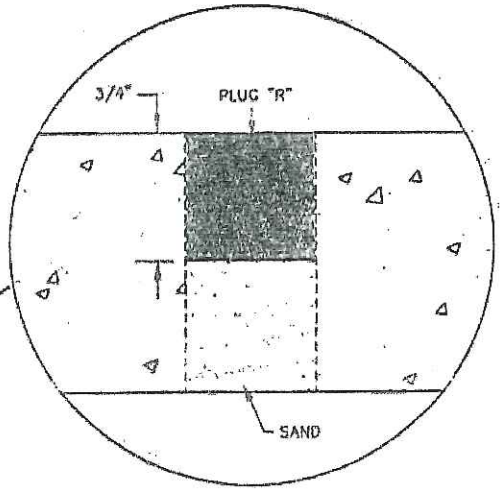

PROCEDURE FOR DRILLING HOLES FOR TESTING

TASK 1: DRILLING HOLES – DRILL A ⅞" HOLE THROUGH THE ASPHALT TO THE SUB GRADE. THE HOLES ARE DRILLED 10 FEET ON CENTERS OVER THE PIPELINE USING A PNEUMATIC DRILL WITH A ⅞" DRILL BIT.

TASK 2: CORROSION TESTING – A PROBE IS INSERTED INTO EACH HOLE. A PIPE TO SOILS POTENTIAL IS MEASURED AND RECORDED. THE PROBE IS REMOVED.

TASK 3: REPAIRING THE DRILLED HOLE – THE HOLES ARE FIRST FILLED WITH SAND SATURATED WITH WATER AND TAMPED WITH A ½" ROD TO PROVIDE A COMPACTED SOIL BASE TO ¾" BELOW A/C SURFACE. A "PLUG–R" SOLID PLUG IS THEN DRIVEN INTO HOLE UNTIL SECURE. THE PLUG IS MELTED TO GRADE MATCHING THE SURROUNDING ASPHALT COLOR LEAVING LITTLE TRACE THAT A HOLE WAS EVER DRILLED AT THE LOCATION.

DRILLING AND REPAIR PROCEDURE FOR ASPHALT/CONCRETE (A/C) DURING INDIRECT INSPECTION SURVEYS

Mears Group, Inc.

TYPICAL APPLICATION

Appendix C

QUIKRETE

MATERIAL SAFTEY DATA SHEET

CEMENT & CONCRETE PRODUCTS™

OSHA	Occupational Safety and Health Administration
PEL	Permissible Exposure Limit
RCRA	Resource Conservation and Recovery Act
SARA	Superfund Amendments and Reauthorization Act
TLV	Threshold Limit Value
TWA	Time-weighted Average
WHMIS	Workplace Hazardous Material Information System

Revision #07-01, supersedes all previous revisions.
Created: 10/25/2006
Last Updated: February 7, 2007

NOTE: The information and recommendations contained herein are based upon data believed to be correct. However, no guarantee or warranty of any kind, express or implied, is made with respect to the information contained herein. We accept no responsibility and disclaim all liability for any harmful effects which may be caused by exposure to silica contained in our products.

US OSHA 29CFR 1910.1200: Considered hazardous under this regulation and should be included in the employers hazard communication program
SARA (Title III) Sections 311 & 312: Qualifies as a hazardous substance with delayed health effects
SARA (Title III) Section 313: Not subject to reporting requirements
TSCA (May 1997): All components are on the TSCA inventory list
Federal Hazardous Substances Act: Is a hazardous substance subject to statues promulgated under the subject act
Canadian Environmental Protection Act: Not listed
Canadian WHMIS: Considered to be a hazardous material under the Hazardous Products Act as defined by the Controlled Products Regulations and subject to the requirements of Health Canada's Workplace Hazardous Material Information (WHMIS). This product has been classified according to the hazard criteria of the Controlled Products Regulation (CPR). This document complies with the WHMIS requirements of the Hazardous Products Act (HPA) and the CPR.

SECTION XVI – OTHER INFORMATION

HMIS-III:

Health –
- 0 = No significant health risk
- 1 = Irritation or minor reversible injury possible
- 2 = Temporary or minor injury possible
- 3 = Major injury possible unless prompt action is taken
- 4 = Life threatening, major or permanent damage possible

Flammability-
- 0 = Material will not burn
- 1 = Material must be preheated before ignition will occur
- 2 = Material must be exposed to high temperatures before ignition
- 3 = Material capable of ignition under normal temperatures
- 4 = Flammable gases or very volatile liquids; may ignite spontaneously

Physical Hazard-
- 0 = Material is normally stable, even under fire conditions
- 1 = Material normally stable but may become unstable at high temps
- 2 = Materials that are unstable and may undergo react at room temp
- 3 = Materials that may form explosive mixtures with water
- 4 = Materials that are readily capable of explosive water reaction

Abbreviations:

ACGIH	American Conference of Government Industrial Hygienists
CAS	Chemical Abstract Service
CERCLA	Comprehensive Environmental Response, Compensation & Liability Act
CFR	Code of Federal Regulations
CPR	Controlled Products Regulations (Canada)
DOT	Department of Transportation
IARC	International Agency for Research
MSHA	Mine Safety and Health Administration
NIOSH	National Institute for Occupational Safety and Health
NTP	National Toxicity Program

MATERIAL SAFTEY DATA SHEET

QUIKRETE

CEMENT & CONCRETE PRODUCTS™

Solubility In Water: Dilutable
Odor: slight ether and ammonia odor

SECTION X - REACTIVITY DATA

Stability: This material is considered stable. Avoid temperatures above 177°C (350°F), the onset of polymeric decomposition. Thermal decomposition is dependent on time and temperature.
Incompatibility (Materials to Avoid): Avoid contact with strong oxidizing agents or strong alkalis.
Hazardous Decomposition or By-products: Thermal decomposition may yield acrylic monomers
Hazardous Polymerization: Will Not Occur.
Condition to Avoid: Maintain storage temperature between 1°C (34°F) and 38°C (100°F) to retain product utility.

SECTION XI – TOXICOLOGICAL INFORMATION

Routes of Entry: Inhalation, Ingestion
Toxicity to Animals:
LD50: Not Available
LC50: Not Available
Chronic Effects on Humans: Not Available
Special Remarks on Toxicity: Not Available

SECTION XII – ECOLOGICAL INFORMATION

Ecotoxicity: Not Available
BOD5 and COD: Not Available
Products of Biodegradation: Not available
Toxicity of the Products of Biodegradation: Not available
Special Remarks on the Products of Biodegradation: Not available

SECTION XIII – DISPOSAL CONSIDERATIONS

Waste Disposal Method: The packaging and material may be land filled once hardened. This product is not classified as a hazardous waste under the authority of the RCRA (40CFR 261) or CERCLA (40CFR 117&302).

SECTION XIV – TRANSPORT INFORMATION

DOT/UN Shipping Name: Non-regulated
DOT Hazard Class: Non-regulated
Shipping Name: Non-regulated
Non-Hazardous under U.S. DOT and TDG Regulations

SECTION XV – OTHER REGULATORY INFORMATION

QUIKRETE

CEMENT & CONCRETE PRODUCTS™

MATERIAL SAFTEY DATA SHEET

SECTION IV – First Aid Measures

Eyes: Immediately flush eye thoroughly with water – do not rub eyes. Continue flushing eye for at least 15 minutes, including under lids, to remove all particles. Call physician immediately.
Skin: Wash skin with cool water and pH-neutral soap or a mild detergent. Seek medical treatment if irritation or inflammation develops or persists.
Inhalation: Remove person to fresh air. If coughing and other symptoms develop, seek medical attention.
Ingestion: If swallowed, give two glasses of water; if large amounts are ingested, induce vomiting. Never give anything by mouth to an unconscious person. Get medical attention.

SECTION V - FIRE AND EXPLOSION HAZARD DATA

Flammability: Noncombustible and not explosive.
Auto-ignition Temperature: Not Applicable
Flash Points: Product may contain less than 1% of a solvent with a Flash Point of 120°C (248°F)
Unusual Hazards: This water-based dispersion can splatter at temperatures above 100°C (212°F). Polymer film can burn once the water has evaporated.

SECTION VI – ACCIDENTAL RELEASE MEASURES

Contain spills immediately with inert materials (eg. Sand, earth). Scrape up and allow to harden before disposal. Use detergent and water to remove the remaining residue.

SECTION VII - PRECAUTIONS FOR SAFE HANDLING AND STORAGE

Keep from freezing; material may coagulate. The minimum recommended storage temperature for this material is 1°C (34°F). The maximum recommended storage temperature for this material is 38°C (100°F).

SECTION VIII – EXPOSURE CONTROL MEASURES

Engineering Controls: Not applicable

Personal Protection: The use of neoprene gloves is recommended.

Exposure Limits: Consult local authorities for acceptable exposure limits

SECTION IX - PHYSICAL/CHEMICAL CHARACTERISTICS

Appearance: White or tinted viscous liquid.
Boiling Point: ~100°C (212°F)

MATERIAL SAFTEY DATA SHEET

QUIKRETE

CEMENT & CONCRETE PRODUCTS™

ACRYLIC CRACK FILLERS

MATERIAL SAFETY DATA SHEET
(Complies with OSHA 29 CFR 1910.1200)

SECTION I: PRODUCT IDENTIFICATION

The QUIKRETE® Companies
One Securities Centre
3490 Piedmont Road, Suite 1300
Atlanta, GA 30329

Emergency Telephone Number
(770) 216-9580

Information Telephone Number
(770) 216-9580

MSDS W3
Revision: Feb-07

QUIKRETE® Product Name	Product #
BLACKTOP REPAIR	8630-10
MORTAR REPAIR	8620-09
CONCRETE REPAIR	8620-10

HEALTH	1
FLAMMABILITY	0
PHYSICAL HAZARD	0

PERSONAL PROTECTION
Safety Glasses, Gloves

PRODUCT USE: COSMETIC CRACK FILLER FOR CONCRETE OR ASPHALT

SECTION II - HAZARD IDENTIFICATION

Route(s) of Entry: Inhalation, ingestion, skin
Acute Exposure: Inhalation of vapor or mist can cause the following: headache, nausea, irritation of nose, throat and lungs. Direct contact with eyes can cause irritation and possible corneal injury.
Chronic Exposure: None known
Carcinogenicity: Not carcinogenic
Carcinogenicity Listings: Not applicable
Medical Conditions Generally Aggravated by Exposure: None known

SECTION III - HAZARDOUS INGREDIENTS/IDENTITY INFORMATION

Hazardous Components	CAS No.	PEL (OSHA) mg/M³	TLV (ACGIH) mg/M³
Limestone/Marble	1317-65-3	5	5
Acrylic Polymer	Not Hazardous	None	None
May contain:			
Titanium Dioxide	13463-67-7	15	10

QUIKRETE

Blacktop Repair

No. B630-10, B630-15

Product Description
Textured acrylic caulking material colored to match Blacktop. Used to fill ¼" to ½" wide cracks in asphalt driveways.

Limitations
Do not apply when temperatures are below 50 °F (10 °C) or if rain threatens or is predicted within 12 hours.

Sizes:
QUIKRETE® Acrylic Blacktop Repair is packaged in 10 fl-oz (296 ml) caulking tubes and 5.5 fl-oz. (163 ml) squeeze bottles.

Color:
QUIKRETE® Acrylic Blacktop Repair is black to match asphalt surfaces.

TECHNICAL DATA
QUIKRETE® Acrylic Blacktop Repair is a water-resistant acrylic formula that stays flexible. It is textured to blend with blacktop surfaces, has minimal shrinkage, excellent adhesion, and is non-flammable

Directions: Surface must be clean, dry, free of grease, dust, or loose particles. Remove all loose stones and chips from the crack before filling.

(1) Cut tip of spout on angle to make a 1/4" (6 mm) to 3/8" (9 mm) hole. (2) Use cartridge in standard caulking gun. Apply by pushing cartridge tip over surface and forcing bead of Blacktop Repair deep into the crack. Apply no thicker than 3/8" (9 mm) at a time. On horizontal surfaces, deep cracks can be partially filled with sand prior to application. (3) Blacktop Repair can be tooled to smooth the surface. (4) Excess Blacktop Repair can be wiped off with a damp cloth. (5) Wait at least 24 hours before painting. Use latex paints only. Air and surface temperature should be above 40°F/4°C for proper application. (6) Do not apply if rain threatens or is predicted within 12 hours.

Caution: May cause eye, skin and respiratory irritation. Avoid contact with eyes, skin and clothing. Avoid breathing vapor. Use only with adequate ventilation. Ingestion may cause irritation. Store between 35°F (2°C) and 100°F (38°C).

Warranty
The QUIKRETE® Companies warrant this product to be of merchantable quality when used or applied in accordance with the instructions or applied in accordance with the instructions herein. The product is not warranted as suitable for any purpose or use other than the general purpose for which it is intended. Liability under this warranty is limited to the replacement of its product (as purchased) found to be defective, or at the shipping companies' option, to refund the purchase price. In the event of a claim under this warranty, notice must be given to The QUIKRETE® Companies in writing at Atlanta, GA 30305. The limited warranty is issued and accepted in lieu of all other express warranties and expressly excludes liability for consequential damages.

The QUIKRETE® Companies, Inc.
One Securities Centre
3490 Piedmont Road, Suite 1300
Atlanta, GA 30305
404.634.9100

QUIKRETE

Concrete Repair

No. 8620-10, 8620-13

QUIKRETE® Concrete Repair is a superior acrylic latex formulation for crack repair in concrete, including concrete, stucco or masonry walls, sidewalks, patios, driveways.

- Dries quickly to a tough and flexible finish
- Helps prevent water and ice damage to concrete surfaces.
- weather resistant
- Excellent Adhesion
- Textured to blend with concrete surfaces
- Easy clean up with water before product dries

Uses: Repairs and fills cracks up to ½" (12 mm) wide in concrete, masonry, stucco, sidewalks, patios, and driveways.

Packaging: QUIKRETE® Concrete Repair is available in 10-fl. oz. (296 ml) caulking tubes and 5.5-fl. oz (163ml) squeeze tubes.

Coverage:

- 10 fl-oz. tubes yield about 24 lineal ft. (7.4 M) for 1/4" (6 mm) diameter bead or 12 lineal ft. (3.7 M) for a 3/8" (9 mm) diameter bead.
- 5.5 fl-oz. Tubes yield about 12 lineal feet (3.7 M) at a 1/4" (6 mm) diameter bead.

Directions: Surface must be clean, dry, free of grease, dust, or loose particles. Remove all loose stones and chips from the crack before filling.

(1) Cut tip of spout on angle to make a ¼" (6 mm) to 3/8" (9 mm) hole. (2) Use cartridge in standard caulking gun. Apply by pushing cartridge tip over surface and forcing bead of Concrete Repair deep into the crack. Apply no thicker than 3/8" (9 mm) at a time. On horizontal surfaces, deep cracks can be partially filled with sand prior to application. (3) Concrete Repair can be tooled to smooth the surface. (4) Excess Concrete Repair can be wiped off with a damp cloth. (5) Wait at least 24 hours before painting. Use latex paints only. Air and surface temperature should be above 40°F/4°C for proper application. (6) Do not apply if rain threatens or is predicted within 12 hours.

Caution: May cause eye, skin and respiratory irritation. Avoid contact with eyes, skin and clothing. Avoid breathing vapor. Use only with adequate ventilation. Ingestion may cause irritation. Store between 35 °F (2°C) and 100 °F (38°C).

Warranty

The QUIKRETE® Companies warrant this product to be of merchantable quality when used or applied in accordance with the instructions or applied in accordance with the instructions herein. The product is not warranted as suitable for any purpose or use other than the general purpose for which it is intended. Liability under this warranty is limited to the replacement of its product (as purchased) found to be defective, or at the shipping companies' option, to refund the purchase price. In the event of a claim under this warranty, notice must be given to The QUIKRETE® Companies in writing at Atlanta, GA 30305. The limited warranty is issued and accepted in lieu of all other express warranties and expressly excludes liability for consequential damages.

The QUIKRETE® Companies, Inc.
One Securities Centre
3490 Piedmont Road, Suite 1300
Atlanta, GA 30305
404.634.9100

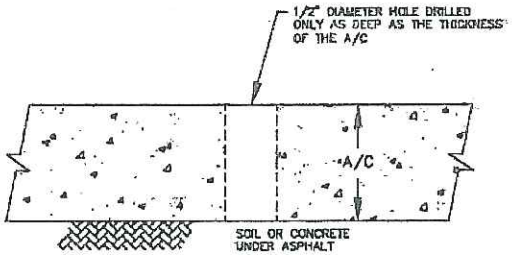

FIGURE 1: SCHEMATIC OF DRILLED HOLE

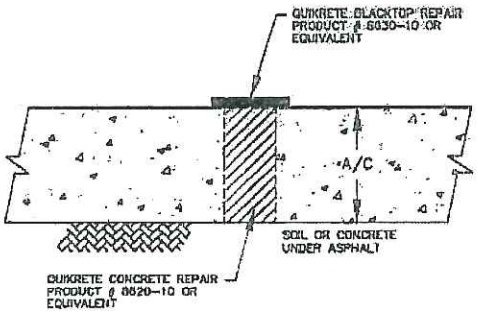

FIGURE 2: SCHEMATIC OF REPAIR AFTER TESTING

PROCEDURE FOR DRILLING HOLES FOR TESTING

TASK 1: DRILLING HOLES – A CREW DRILLS A ½ INCH DIAMETER HOLE JUST THROUGH THE A/C SO THAT A COPPER SULFATE HALF CELL CAN CONTACT THE TOP OF THE SOIL SURFACE JUST BELOW THE A/C. THE HOLES ARE DRILLED EVERY 10 FEET USING A PNUEMATIC OR ELECTRIC DRILL WITH A ½ INCH DIAMETER DRILL BIT.

TASK 2: CORROSION TESTING – THE "READER" PROCEEDS TO EACH HOLE USING A COPPER SULFATE HALF CELL SLIGHTLY SMALLER THAN ½ INCH DIAMETER OR EQUIVALENT, AND COLLECTS PIPE TO SOIL POTENTIAL MEASUREMENTS.

TASK 3: REPAIRING THE DRILLED HOLE – ONCE DATA HAS BEEN VALIDATED THE CREW WILL RETURN TO THE SITE TO PATCH THE HOLE AS SPECIFIED IN THE DRAWINGS ON THIS PAGE. QUIKRETE CONCRETE REPAIR 8620-10 IS USED TO FILL THE HOLE TO GRADE. QUIKRETE BLACKTOP REPAIR 8630-10 IS THEN USED TO SEAL THE HOLE AND MATCH THE SURROUNDING A/C.

DRILLING AND REPAIR PROCEDURE FOR A/C DURING INDIRECT INSPECTION SURVEYS

Mears Group, Inc.

TYPICAL APPLICATION

N.T.S.

1 OF 1

Appendix B

Section 313 Toxic Chemicals subject to the reporting requirements of that section and 40 CFR part 372 (EPCRA):

Ingredient	C.A.S. No	% by Wt
TOLUENE DIISOCYANATE	26471-62-5	01 - 10

STATE REGULATIONS

Contact 3M for more information.

CALIFORNIA PROPOSITION 65

Ingredient	C.A.S. No.	Classification
CARBON BLACK	1333-86-4	**Carcinogen
TOLUENE DIISOCYANATE	26471-62-5	**Carcinogen

** WARNING: contains a chemical which can cause cancer.

CHEMICAL INVENTORIES

The components of this product are in compliance with the chemical notification requirements of TSCA.

All applicable chemical ingredients in this material are listed on the European Inventory of Existing Chemical Substances (EINECS), or are exempt polymers whose monomers are listed on EINECS.

The components of this product are listed on the Australian Inventory of Chemical Substances.

The components of this product are listed on the Canadian Domestic Substances List.

Contact 3M for more information.

INTERNATIONAL REGULATIONS

Contact 3M for more information.

This MSDS has been prepared to meet the U.S. OSHA Hazard Communication Standard, 29 CFR 1910.1200.

SECTION 16: OTHER INFORMATION

NFPA Hazard Classification
Health: 2 Flammability: 2 Reactivity: 1 Special Hazards: Reacts with Water

National Fire Protection Association (NFPA) hazard ratings are designed for use by emergency response personnel to address the hazards that are presented by short-term, acute exposure to a material under conditions of fire, spill, or similar emergencies. Hazard ratings are primarily based on the inherent physical and toxic properties of the material but also include the toxic properties of combustion or decomposition products that are known to be generated in significant quantities.

HMIS Hazard Classification
Health: 2 Flammability: 2 Reactivity: 1 Protection: X - See PPE section.

Hazardous Material Identification System (HMIS®) hazard ratings are designed to inform employees of chemical hazards in the workplace. These ratings are based on the inherent properties of the material under expected conditions of normal use and are not intended for use in emergency situations. HMIS® ratings are to be used with a fully implemented HMIS® program. HMIS® is a registered mark of the National Paint and Coatings

Hydrogen Cyanide	During Combustion
Oxides of Nitrogen	During Combustion

SECTION 11: TOXICOLOGICAL INFORMATION

Please contact the address listed on the first page of the MSDS for Toxicological Information on this material and/or its components.

SECTION 12: ECOLOGICAL INFORMATION

ECOTOXICOLOGICAL INFORMATION

Not determined.

CHEMICAL FATE INFORMATION

Not determined.

SECTION 13: DISPOSAL CONSIDERATIONS

Waste Disposal Method: Incinerate in a permitted hazardous waste incinerator. As a disposal alternative, dispose of waste product in a permitted hazardous waste facility.

EPA Hazardous Waste Number (RCRA): D001 (Ignitable)

Since regulations vary, consult applicable regulations or authorities before disposal.

SECTION 14: TRANSPORT INFORMATION

ID Number(s):
78-8110-9503-9, 78-8110-9504-7

Please contact the emergency numbers listed on the first page of the MSDS for Transportation Information for this material.

SECTION 15: REGULATORY INFORMATION

US FEDERAL REGULATIONS

Contact 3M for more information.

311/312 Hazard Categories:
Fire Hazard - Yes Pressure Hazard - No Reactivity Hazard - No Immediate Hazard - Yes Delayed Hazard - Yes

* Substance(s) refer to the potential contribution to the overall exposure by the cutaneous route including mucous membrane and eye, either by airborne or, more particularly, by direct contact with the substance. Vehicles can alter skin absorption.

SOURCE OF EXPOSURE LIMIT DATA:
ACGIH: American Conference of Governmental Industrial Hygienists
CMRG: Chemical Manufacturer Recommended Guideline
OSHA: Occupational Safety and Health Administration
AIHA: American Industrial Hygiene Association Workplace Environmental Exposure Level (WEEL)

SECTION 9: PHYSICAL AND CHEMICAL PROPERTIES

Odor, Color, Grade:	Black caulk with mild odor.
General Physical Form:	Liquid
Autoignition temperature	*No Data Available*
Flash Point	Approximately 109 °F [*Test Method:* Tagliabue Closed Cup]
Flammable Limits - LEL	1.5 % volume
Flammable Limits - UEL	7 % volume
Boiling point	313 °F
Density	1.22 g/ml [@ 20 °C]
Vapor Density	4.60 [*Ref Std:* AIR=1]
Vapor Pressure	2 mmHg [@ 68 °C]
Specific Gravity	1.22 [*Ref Std:* WATER=1]
pH	*Not Applicable*
Melting point	*Not Applicable*
Solubility in Water	Nil
Evaporation rate	0.21 [*Ref Std:* BUOAC=1]
Volatile Organic Compounds	248 g/l
Percent volatile	20 %
VOC Less H2O & Exempt Solvents	248 g/l
Viscosity	25000 centipoise

SECTION 10: STABILITY AND REACTIVITY

Stability: Stable.

Materials and Conditions to Avoid: Amines

Hazardous Polymerization: Hazardous polymerization will not occur.

Hazardous Decomposition or By-Products

Substance	Condition
Aldehydes	During Combustion
Carbon monoxide	During Combustion
Carbon dioxide	During Combustion

Important Notice to Purchaser:

THE FOLLOWING IS MADE IN LIEU OF ALL WARRANTIES, EXPRESSED OR IMPLIED, INCLUDING ANY IMPLIED WARRANTY OF MERCHANTABILITY OR FITNESS FOR PARTICULAR PURPOSE. 3M shall replace or refund the purchase price of such quantity of product found to be defective in material or manufacture or not in conformance with 3M's written specifications. Except as herein provided, 3M shall not be liable in contract or in tort for any injury, loss or damage, whether direct, indirect, incidental, special or consequential, arising out of the use, misuse, or the inability to use the product for intended use. No statement of recommendation not contained herein shall have any force or effect unless in an agreement signed by officers of seller and manufacturer.

3M

3M Traffic Safety Systems Division
3M Center Building 225-5S-08
St. Paul, MN 55144-1000
1-800-553-1380
www.3M.com/tss

3M Canada Company
P.O. Box 5757
London, Ontario, Canada
N6A 4T1
1-800-3MHELPS

50% pre-consumer waste paper
10% post-consumer waste paper

Printed in USA
©3M, August 1997

75-0500-2244-3

Simple, fast and sure way to do the job right

Specifications

(Performance Properties*)

Cured Sealant

Hardness (Indentation)
Rx Type A
Model 1700 75

Tensile Strength ..... 800 psi (56.24 kg/cm²)

Elongation 600%

Weathering Resistance
XW-Weatherometer
(350 hours) ..... Slight cracking

Salt Spray Resistance
(28 days @ 100°F (38°C)
5% NaCl) ..... No significant change in tensile strength and elongation

ARC Resistance ..... 71 seconds

Dielectric Constant ..... 6.35 @ 50 Hz
4.33 @ 500,000 Hz

Wet Sealant

Weight ..... 10.0 lbs/gal. (1.258 kg/L)

Non Volatile Content
(by Weight) 80%

Viscosity Brookfield RVF #6
Spindle @ 20 RPM
80°F (27°C) ..... 30,000 cps

Tack Free Time
(Polyethylene Film) ..... 24 hours

Flash Point ..... 105°F (41°C)

*All results based on 3M laboratory testing

1. Cut the loop

2. Flush out debris and blow out standing water.

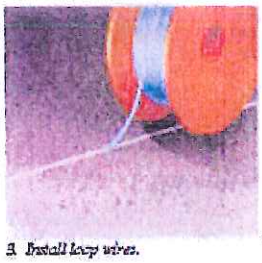

3. Install loop wires.

4. Fill saw cut with 3M™ Detector Loop Sealant.

3M™ Detector Loop Sealant... easy to use...superior protection

3M detector loop sealant encapsulates, insulates and protects the wires of a detector loop from the effects of the harsh roadway environment. In temperature extremes, it retains flexibility so the wires are continuously protected to prevent loop failure.

Some good reasons you should be using 3M detector loop sealant

Saves application time

3M loop sealant is ready to use. There is no need to measure, mix or heat and no smoothing is required. Sealant can be applied on crowned or sloped roadways. It will not run to low spots.

Outstanding protection

Loop wires are held in position and completely contained in a tough, yet flexible, rubber cocoon. Wires are protected against movement, road debris penetration and moisture, eliminating these causes of false calls.

Reduced maintenance

3M sealant will not shrink, so call-backs for refilling are eliminated. And sharp objects will not penetrate the tough rubber. Sealant cures with smooth surface so there is no need for finishing.

Natural curing

Sealant reacts with moisture in the environment to produce a rubber that is resistant to weather, oils, gasoline, antifreeze, brake fluid and road salt.

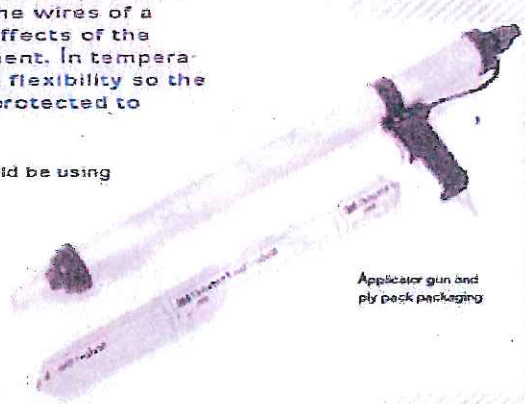

Applicator gun and ply pack packaging

Long lasting

The sealant will not become brittle with age or temperature extremes.

Temperature stable

The sealant won't degrade in high temperatures or fracture at temperatures as low as -40°F.

Roadway compatibility

3M sealant can be used with either concrete or asphalt, fresh or aged, wet or dry surfaces.

Fast, complete application

3M supplies special nozzles that help you fill the sawcut from the bottom to the top.

New, more convenient application

3M's new ply pack is especially well suited for customers who use applicator guns to apply sealant. Dispensing rate is improved by up to 300%. Disposable packaging waste is reduced by over 90% at the work site.

3M

Detector Loop Sealant

5000

Loop sealant designed specifically for the job

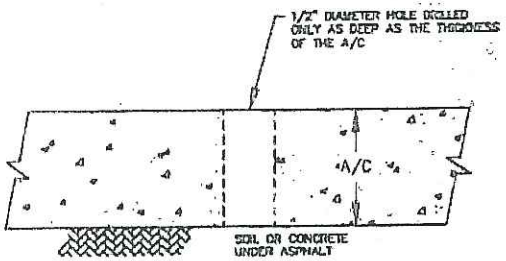

FIGURE 1: SCHEMATIC OF DRILLED HOLE

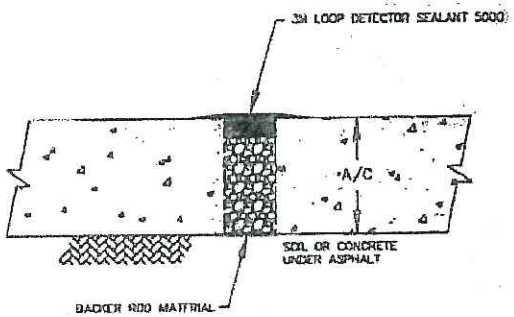

FIGURE 2: SCHEMATIC OF REPAIR AFTER TESTING

PROCEDURE FOR DRILLING HOLES FOR TESTING

TASK 1: DRILLING HOLES – A CREW DRILLS A ½ INCH DIAMETER HOLE JUST THROUGH THE A/C SO THAT A COPPER SULFATE HALF CELL CAN CONTACT THE TOP OF THE SOIL SURFACE JUST BELOW THE A/C. THE HOLES ARE DRILLED EVERY 10 FEET USING A PNEUMATIC OR ELECTRIC DRILL WITH A ½ INCH DIAMETER DRILL BIT.

TASK 2: CORROSION TESTING – THE "READER" PROCEEDS TO EACH HOLE USING A COPPER SULFATE HALF CELL SLIGHTLY SMALLER THAN ½ INCH DIAMETER OR EQUIVALENT, AND COLLECTS PIPE TO SOIL POTENTIAL MEASUREMENTS.

TASK 3: REPAIRING THE DRILLED HOLE – ONCE DATA HAS BEEN VALIDATED THE CREW WILL RETURN TO THE SITE TO PATCH THE HOLE AS SPECIFIED IN THE DRAWINGS ON THIS PAGE. 3M LOOP DETECTOR SEALANT 5000 IS USED TO FILL THE HOLE TO GRADE AND MATCH THE SURROUNDING A/C.

DRILLING AND REPAIR PROCEDURE FOR A/C
DURING INDIRECT INSPECTION SURVEYS

Mears Group, Inc.
TYPICAL APPLICATION

Appendix A

Below is a picture of a typically repaired hole. Both products are similar in visual and physical appearance.

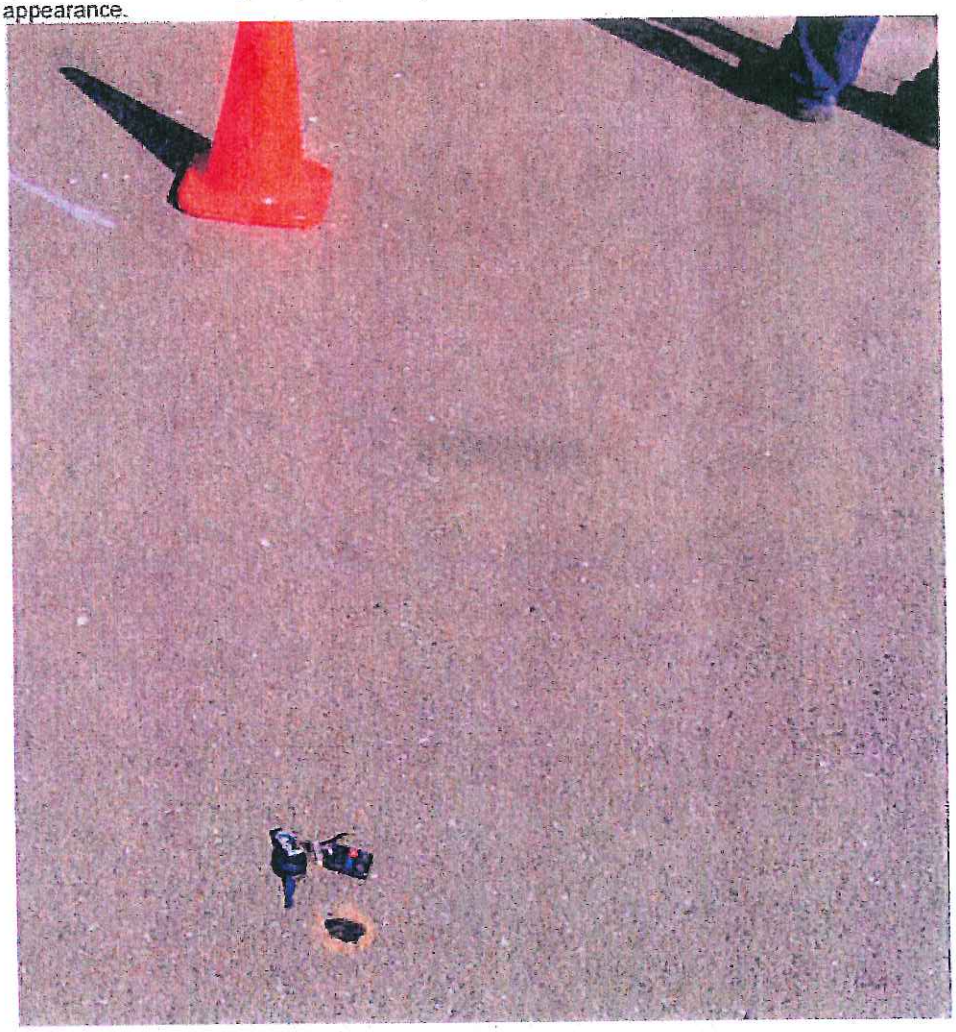

This work is routinely performed across the nation over the last six (6) years, including major cities such as San Francisco, California; Charlotte, North Carolina; Phoenix, Arizona; and New York, New York.

The drilled hole repair is completed using one of three options;

1. 3M Loop Detector Sealant 5000 in combination with a polyfoam backer rod material. The Backer rod is cut into 6-inch lengths and then inserted and tamped into the hole so that the top of the backer rod is approximately 2-inches below asphalt grade. The 3M Loop Detector Sealant 5000 is then applied to the top of the backer rod with enough volume to fill the remaining void of the hole until it is flush with the roadway asphalt. This type of repair is the preferred method used ½ inch diameter holes.

   The product and process has been historically used as a sealant for wires installed at traffic loop detector signals. The 3M detector loop sealant encapsulates, insulates and protects the wires of a detector loop from the effects of the harsh roadway environment.

   The MSDS and product data specification sheets for this product can be found in Appendix A of this document. Additionally, a schematic of the hole repair can be found in Appendix A.

2. Quikrete 8620 Concrete Repair as a base for the hole and Quikrete 8630 Asphalt Repair for the top of the hole. This type of repair is an alternate method for ½ inch holes.

   The MSDS & Specification for these products can be found in Appendix B of this document. Additionally, a schematic of the hole repair can be found in Appendix B.

3. Compacted sand is used as a base for the hole and a Plug-R for the top of the hole. The plug is melted to grade matching the surrounding asphalt. This type of repair is typically used for 7/8 inch diameter holes.

   The MSDS & Specification for these products can be found in Appendix C of this document. Additionally, a schematic of the hole repair can be found in Appendix C.

To maintain pipeline integrity and public safety, indirect inspection techniques such as Close Interval Pipe-to-Soil Potential Surveys (CIS) and Direct Current voltage Gradient (DCVG) Surveys are performed over pipeline right-of-ways at approximately ten (10) foot intervals. The techniques are above ground surveys which verify that the corrosion control systems in place are protecting the pipelines.

Since these surveys require electrolytic contact, dielectrics such as asphalt require drilling to road base for soil contact. Typically, a ½" or ⅞" diameter hole is used to complete these surveys in paved areas. Below is a picture of a drilled hole adjacent to a pen sized device that is used to take the measurements: