COUNTY OF SAN JOAQUIN

DEPARTMENT OF PUBLIC WORKS
P.0. BOX 1810-1810 E. HAZELTON AVENUE
STOCKTON, CALIFORNIA 95201
(209) 468-3000
FAX # (209) 468-9324

Permit No: **PS-1201142**
Date Issued: 05/18/2012
Exp. Date: 08/01/2012
Project No: PWP110005
Quad: NW

ENCROACHMENT PERMIT

To: CALTRANS - RHODEL DECLARO
1976 E. DR. MARTIN LUTHER KING BLVD.
STOCKTON, CA 95205

Encroachment Type:

FLAGGERS AND SIGNAGE			

Location:
WOODBRIDGE RD., ACAMPO RD. AND ST. RT. 99 W. FRONTAGE RD.

In compliance with your request of **05/18/2012** , permission is hereby granted to do work in County right-of-way as shown on attached application and subject to all the terms, conditions and restrictions written below or printed as general or special provisions on any part of this form. See reverse side and attached sheet, if any.

Trench excavations for service connections will not be permitted within ten feet (10') of pavement centerline unless otherwise approved by the Director. Surface of trench patches shall match in kind and be smooth and even with that of abutting surface. Special attention shall be given to depth of utilities through roadside area in anticipation of future drainage facilities, road profile and/or frontage development. All underground utility facilities are to be established and accurately dimensioned on sketches from surveyed centerline of road right of way, or from right of way (border) lines.

Permittee shall call the Department of Public Works, Field Engineering Division (Permit Inspections) at (209)953-7421 at least forty-eight hours prior to beginning any work within the County right of way. All work performed under this permit shall conform to the rules and regulations pertaining to safety established by the California Division of Industrial Safety and Cal-OSHA.

The jobsite shall be kept in a safe condition at all times by the daily removal of any excess dirt or debris which might be a hazard to either pedestrian or automobile traffic. All necessary traffic convenience and warning devices and personnel shall be provided, placed and maintained by and at the sole expense of the Permittee in accordance with the latest edition of the CALTRANS Manual of Traffic Control.

After completion of the work permitted herein, all debris, lumber, barricades, or any excess material shall be removed and the jobsite left in a neat workmanlike manner. Immediately following completion of construction permitted herein, Permittee shall fill out and mail notice of completion (see attached post card) provided by Grantor.

Special Comments:

Traffic Control Per MUTCD

FORMS:

SS/WW, R-29		

Est. Permit Fee: $0.00

THOMAS M. GAU, Director
Department of Public Works

By: _____
Permit Section

WHITE	-Permitee
GOLDENROD	-PWD Central File
YELLOW	-Field Inspection
PINK	-Permit Section

ENCROACHMENT PERMIT

GENERAL PROVISIONS

12-1

1. This permit is issued under and subject to a11 1aws and ordinances of agencies governing the encroachment herein permitted. See the following references:
   STREETS AND HIGHWAYS CODE
   1. Division 1, Chapter 3
   2. Division 2, Chapter 2, Section 942
   3. Division 2, Chapter 4, Section 1126
   4. Division 2, Chapter 5.5 and Chapter 6

   SAN JOAQUIN COUNTY ORDINANCES NUMBERED: 324, 441, 648, 662, 672, 695, 700, 860, and 892.

2. It is understood and agreed by the Permittee that the doing of any work under this permit shall constitute an acceptance of all the provisions contained herein and failure on the Permittee's part to comply with any provision will be cause for revocation of this permit. Except as otherwise provided for public agencies and franchise holders, this permit is revocable on five days notice.

3. All work shall be done subject to the supervision of and the satisfaction of the grantor. The Permittee shall at all times during the progress of the work keep the County Highway in as neat and clean a condition as is possible and upon completion of the work granted herein, shall leave the County Highway in a thoroughly neat, clean and usable condition.

4. The Permittee also agrees by the acceptance of this permit to properly maintain any encroachment structure placed by the Permittee on any part of the County Highway and to immediately repair any injury to any portion of the highway, which occurs as a result of the maintenance of the said encroachment structure, until such time as the Permittee may be relieved of the responsibility of such maintenance of the encroachment structure by the County of San Joaquin.

5. The Permittee also agrees by the acceptance of this permit to make, at its own expense, such repairs as may be deemed necessary by the County Director of Public Works or his representative.

6. It is further agreed by the Permittee that whenever construction, reconstruction or maintenance work upon the highway is necessary, the installation provided for herein shall, upon request of the County Department of Public Works, be immediately moved or removed by and at the sole expense of the Permittee.

7. No material used for fill or backfill in the construction of the encroachment shall be borrowed or taken from within the County right of way.

8. All work shall be planned and carried out so that there will be as little inconvenience as possible to the traveling public. No material shall be stacked within eight feet (8') of the edge of the pavement or traveled way unless otherwise provided herein. Adequate provision shall be made for the protection of the traveling public. Barricades shall be placed, With approved Signs and lights at light, and flagmen shall be employed, all as may be required by the particular work in progress.

9. The Permittee, by the acceptance of this permit, shall assume full responsibility for all liability for personal injury or damage to property which may arise out of the work herein permitted or which may arise out of the failure of the part of the Permittee to do the work provided for under this permit. In the event any .claim of such liability is made against the County of San Joaquin or any department, official or employee thereof, the Permittee shall defend, indemnify, and hold them and each of them harmless for such claim.

10. All backfill material is to be moistened as necessary and thoroughly compacted with mechanical means. If required by the County Director of Public Works, such backfill shall consist of gravel or crushed rock. The Permittee shall maintain the surface over structures placed hereunder as may be necessary to insure the return of the roadway to a completely stable condition and until relieved of such responsibility by the County Department of Public Works. Wherever a gravel, crushed rock or asphalt surfacing is cut or damaged in the work of placing an encroachment structure, such material shall either be separately stored and replaced in the roadway as nearly as possible.in its original state or shall be replaced in kind, and the roadway shall be left in at least as good a condition as It was before the commencement of operations of placing the encroachment structure.

11. Whenever necessary to, secure permission from abutting property owners, such authority must be secured by the Permittee prior to starting work.

12. The future safety and convenience of the traveling public shall be given every consideration in the location and type of construction.

APPLICATION FOR ENCROACHMENT PERMIT

PLEASE PRINT:

Date 5/23/2011

To: San Joaquin County
Department of Public Works

RHODEL DE CLARO - CALTRANS
(Applicant Name)

1976 E. DR. MARTIN LUTHER KING BLVD.
(Mailing Address)

STOCKTON, CA 95205
(City, State, Zip Code)

(209) 942-6048
(Area Code - Telephone Number)

OFFICE USE ONLY

JOB # PWP110005 REF #
APN CR #
EXP. DATE 8-1-2012
VALID 5-28-2012 TO 8-1-2012 DRIVEWAYS:
STREET Woodbridge Rd, ACampo Rd,* ST. RT. 99 W. Frontage R
AREA Lodi QUAD NW *
TYPE Signage & Flaggers *
FORMS
NOTES

Sketch (Detailed plans may be submitted)

PLEASE SEE ATTACHED:

1) TRAFFIC HANDLING PLANS
2) RAMP CLOSURE CHARTS

PROJECT EA: 10-0V5601

The undersigned hereby applies for permission to excavate, construct and/or otherwise encroach on County Highway Right-of-Way on the _____ side of _____ approximately _____ feet/mile _____ of the "West" Frontage Rd between Acampo Woodbridge Rd at Route 99. To be used as a detour while SB Route 99 is closed to repair damaged girder on Woodbridge Overcrossing. Acampo Road On-Ramp (SB) and Woodbridge Road Off-ramp (SB) will also be closed during construction hours.

Work will commence on or about ~~Summer 2012~~ 5-28-2012 for approximately ~~TBD~~ 8-1-2012 days.

I, the undersigned, certify that I am the owner of the respective property, or am qualified to represent the owner and agree to do the work described above in accordance with the rules and regulations of San Joaquin County and subject to inspection and approval.

Rhodel DeClaro - CalTrans TE 5/23/11
Signature of Applicant - Title **Date**

E:\PUB-SV WK\MASTER PS\ENCROACHMENT PERMIT APPLICATION.DOC (01/05)

William Lawson

From: Quan H Trinh <quan_h_trinh@dot.ca.gov>
Sent: Wednesday, May 16, 2012 3:28 PM
To: William Lawson
Cc: Paul Elliott
Subject: Fw: 10-0v560 Flagger Pland Sheet
Attachments: 10-0V560 Flagger Plan.pdf

Dear Bill,

Please see the attached plan sheet below provided by Rhodel. Please note that the State will make sure necessary flaggers stationed at every intersection of the detoured routes to better handle traffic flows. Also, I mentioned on the phone conversation this morning that once the contractor provides their work schedule, I'll forward it to you for review. Please contact me if you have any questions.

Quan H. Trinh
Resident Engineer
Waterfront Construction Office
611 San Juan Ave.
Stockton, CA 95203
Cell:(209)471-4008
Fax:(209)948-7215

----- Forwarded by Quan H Trinh/D10/Caltrans/CAGov on 05/16/2012 03:14 PM -----

Rhodel De Claro/D10/Caltrans/CAGov

05/16/2012 01:18 PM

To Quan H Trinh/D10/Caltrans/CAGov@DOT
cc
Subject 10-0v560 Flagger Pland Sheet

Hi Quan,
Attached is what SJ County is asking for. Thanks.

Thank you,

Rhodel De Claro, P.E.
CalTrans-District 10
Waterfront Construction Office

NOT FOR CONSTRUCTION
FOR TEMPORARY DETOUR ROUTE ONLY

Heat Straighten Girder- Woodbridge Road OC
Contract 10-0V5604
Project Schedule

American Civil Constructors

Bridge Location	Contractor	Week 1							Week 2						
		5/13 SU	5/14 M	5/15 T	5/16 W	5/17 TH	5/18 F	5/19 S	5/20 SU	5/21 M	5/22 T	5/23 W	5/24 TH	5/25 F	5/26 S
Woodbridge Road OC															
Submit/Review Sign Stucture Shop Drawings	ACC/CT		x	x	x	x	x			x	x	x	x	x	
Submit/Review Structure Steel Shop Drawings	ACC/CT		x	x	x	x	x			x	x	x	x	x	
Install CAS	Farwest														
Heat Straighten Girder	Dalton Inc.														
Furnish Structural Steel	Ulmer														
Spot Blast and Clean and Paint Undercoat	Jeffco														
Install Structural Steel Angle	ACC														
Remove & Replace Grout Pads	ACC														
Clean and Paint Structural Steel	Jeffco														
Furnish Sign Structure	Coral														
De-energize Sign	Mike Brown														
Remove Bridge Mounted Sign	Coral														
Install Sign Structure and Panel	Coral														
Install Sign Lighting	Mike Brown														
Reset Roadside Sign	Farwest														
Remove CAS	Farwest														

Bridge Location	Week 3							Week 4						
	5/27 SU	5/28 M	5/29 T	5/30 W	5/31 TH	6/1 F	6/2 S	6/3 SU	6/4 M	6/5 T	6/6 W	6/7 TH	6/8 F	6/9 S
Woodbridge Road OC														
Submit/Review Sign Stucture Shop Drawings														
Submit/Review Structure Steel Shop Drawings														
Install CAS					x									
Heat Straighten Girder									x	x	x	x	x	
Furnish Structural Steel		x	x	x	x	x	x	x	x	x	x	x	x	x
Spot Blast and Clean and Paint Undercoat														
Install Structural Steel Angle														
Remove & Replace Grout Pads														
Clean and Paint Structural Steel														
Furnish Sign Structure		x	x	x	x	x	x	x	x	x	x	x	x	x
De-energize Sign														
Remove Bridge Mounted Sign														
Install Sign Structure and Panel														
Install Sign Lighting														
Reset Roadside Sign														
Remove CAS														

Bridge Location	Week 5							Week 6						
	6/10 SU	6/11 M	6/12 T	6/13 W	6/14 TH	6/15 F	6/16 S	6/17 SU	6/18 M	6/19 T	6/20 W	6/21 TH	6/22 F	6/23 S
Woodbridge Road OC														
Submit/Review Sign Stucture Shop Drawings														
Submit/Review Structure Steel Shop Drawings														
Install CAS														
Heat Straighten Girder														
Furnish Structural Steel	x	x	x	x	x	x	x	x						
Spot Blast and Clean and Paint Undercoat				x	x	x								
Install Structural Steel Angle									x	x				
Remove & Replace Grout Pads											x	x	x	
Clean and Paint Structural Steel											x	x	x	
Furnish Sign Structure	x	x	x	x	x	x	x	x	x	x	x	x	x	x
De-energize Sign														
Remove Bridge Mounted Sign														
Install Sign Structure and Panel														
Install Sign Lighting														
Reset Roadside Sign														
Remove CAS														

Bridge Location	Week 6							Week 7						
	6/24 SU	6/25 M	6/26 T	6/27 W	6/28 TH	6/29 F	6/30 S	7/1 SU	7/2 M	7/3 T	7/4 W	7/5 TH	7/6 F	7/7 S
Woodbridge Road OC														
Submit/Review Sign Stucture Shop Drawings														
Submit/Review Structure Steel Shop Drawings														
Install CAS														
Heat Straighten Girder														
Furnish Structural Steel														
Spot Blast and Clean and Paint Undercoat														
Install Structural Steel Angle														
Remove & Replace Grout Pads		x												
Clean and Paint Structural Steel		x	x	x	x									
Furnish Sign Structure	x	x	x	x	x	x	x	x	x	x	x	x	x	x
De-energize Sign														
Remove Bridge Mounted Sign														
Install Sign Structure and Panel														
Install Sign Lighting														
Reset Roadside Sign														
Remove CAS														

Bridge Location	Week 8							Week 9						
	7/8 SU	7/9 M	7/10 T	7/11 W	7/12 TH	7/13 F	7/14 S	7/15 SU	7/16 M	7/17 T	7/18 W	7/19 TH	7/20 F	7/21 S
Woodbridge Road OC														
Submit/Review Sign Stucture Shop Drawings														
Submit/Review Structure Steel Shop Drawings														
Install CAS														
Heat Straighten Girder														
Furnish Structural Steel														
Spot Blast and Clean and Paint Undercoat														
Install Structural Steel Angle														
Remove & Replace Grout Pads														
Clean and Paint Structural Steel														
Furnish Sign Structure	x													
De-energize Sign		x												
Remove Bridge Mounted Sign		x												
Install Sign Structure and Panel			x	x										
Install Sign Lighting					x	x								
Reset Roadside Sign									x					
Remove CAS										x				

Bridge Location	Week 10						
	7/22 SU	7/23 M	7/24 T	7/25 W	7/26 TH	7/27 F	7/28 S
Woodbridge Road OC							
Submit/Review Sign Stucture Shop Drawings							
Submit/Review Structure Steel Shop Drawings							
Install CAS							
Heat Straighten Girder							
Furnish Structural Steel							
Spot Blast and Clean and Paint Undercoat							
Install Structural Steel Angle							
Remove & Replace Grout Pads							
Clean and Paint Structural Steel							
Furnish Sign Structure							
De-energize Sign							
Remove Bridge Mounted Sign							
Install Sign Structure and Panel							
Install Sign Lighting							
Reset Roadside Sign							
Remove CAS							

Dist	COUNTY	ROUTE	POST MILES TOTAL PROJECT	SHEET No.	TOTAL SHEETS
10	SJ	99	32.6	1	15

INDEX OF PLANS

SHEET No.	DESCRIPTION
1	TITLE AND LOCATION MAP
2	TRAFFIC HANDLING PLAN
3	CONSTRUCTION AREA SIGNS AND SUMMARY OF QUANTITIES
4	SIGN DETAILS AND QUANTITIES
5	ELECTRICAL PLANS
6-11	REVISED STANDARD PLANS

STRUCTURE PLANS

12-15	WOODBRIDGE ROAD OC-HEAT STRENGTHEN Br No. 29-0145

THE STANDARD PLANS LIST APPLICABLE TO THIS CONTRACT IS INCLUDED IN THE NOTICE TO BIDDERS AND SPECIAL PROVISIONS BOOK.

STATE OF CALIFORNIA

DEPARTMENT OF TRANSPORTATION

PROJECT PLANS FOR CONSTRUCTION ON

STATE HIGHWAY

IN SAN JOAQUIN COUNTY
NEAR LODI
AT WOODBRIDGE ROAD OVERCROSSING

TO BE SUPPLEMENTED BY STANDARD PLANS DATED MAY 2006

LOCATION MAP

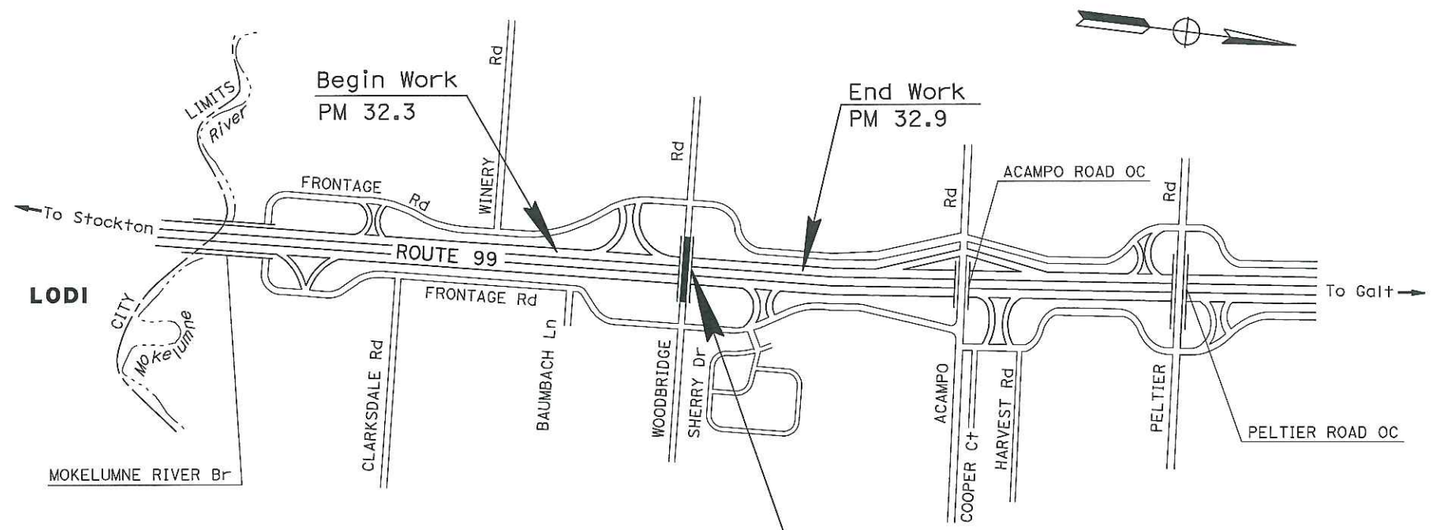

LOCATION OF CONSTRUCTION

WOODBRIDGE ROAD OC
Br No. 29-0145 PM 32.6

NO SCALE

Rhodel De Claro 9/19/11
PROJECT ENGINEER DATE
REGISTERED CIVIL ENGINEER

REGISTERED PROFESSIONAL ENGINEER
RHODEL De CLARO
No. 74058
Exp. 6/30/13
CIVIL
STATE OF CALIFORNIA

December 12, 2011
PLANS APPROVAL DATE

THE STATE OF CALIFORNIA OR ITS OFFICERS OR AGENTS SHALL NOT BE RESPONSIBLE FOR THE ACCURACY OR COMPLETENESS OF SCANNED COPIES OF THIS PLAN SHEET.

PROJECT MANAGER ALVIN MANGINDIN

DESIGN ENGINEER ALVIN MANGINDIN

THE CONTRACTOR SHALL POSSESS THE CLASS (OR CLASSES) OF LICENSE AS SPECIFIED IN THE "NOTICE TO BIDDERS."

CONTRACT No.	10-0V5604
PROJECT ID	1000020472

LAST REVISION 00-00-00

DATE PLOTTED => 14-DEC-2011
TIME PLOTTED => 13:54

Dist	COUNTY	ROUTE	POST MILES TOTAL PROJECT	SHEET No.	TOTAL SHEETS
10	SJ	99	32.6		

REGISTERED CIVIL ENGINEER — DATE 5-16-12

PLANS APPROVAL DATE 5-16-12

REGISTERED PROFESSIONAL ENGINEER RHODEL De CLARO No. 74058 Exp. 6/30/13 CIVIL STATE OF CALIFORNIA

THE STATE OF CALIFORNIA OR ITS OFFICERS OR AGENTS SHALL NOT BE RESPONSIBLE FOR THE ACCURACY OR COMPLETENESS OF SCANNED COPIES OF THIS PLAN SHEET.

NOTES:

1. EXACT SIGN LOCATIONS TO BE DETERMINED BY ENGINEER.
2. * ADVANCED SPECIAL MESSAGE ADVISORY SIGN AT RAMPS.
3. THE STOP SIGN AND MOUNTING BASE SHALL BE REMOVED DURING DETOUR AND REPLACED WITH A TEMPORARY SIGN.
4. WHEN DETOUR IS NOT IN USE, COVER ALL CONFLICTING ROADSIDE SIGNS EXCEPT SC6-4.
5. ALL TEMPORARY SIGNS SHALL COMPLEMENT STANDARD PLANS T10A, T13 AND T14.
6. DURING THE SB ROUTE 99 CLOSURE,

THE PCMS MESSAGE AT (G) SHOULD READ:

1ST FRAME	→	2ND FRAME
ROAD WORK AHEAD	→	FWY CLOSED AHEAD

THE PCMS MESSAGE AT (H) SHOULD READ:

1ST FRAME	→	2ND FRAME
FWY CLOSED AHEAD	→	FOLLOW DETOUR

LEGEND

- FLAGGER
- SIGN No.
- CONSTRUCTION AREA SIGNS (PORTABLE)
- DIRECTION OF TRAFFIC
- PORTABLE CHANGEABLE MESSAGE SIGN

CONSTRUCTION AREA SIGNS (PORTABLE)

SIGN No.	SIGN CODE	PANEL SIZE	No. OF SIGNS	No. OF POSTS AND SIZE	SIGN MESSAGE
(A)*	SC6-4(CA)	48" x 60"	2	1 - 6" x 6"	"RAMP CLOSED INFO"
(B)	M4-10(R↑)	48" x 18"	2	1 - 4" x 4"	DETOUR (ARROW)
(C)	M4-10(L↑)	48" x 18"	2	1 - 4" x 4"	DETOUR (ARROW)
(D)	M4-8	24" x 12"	4	1 - 4" x 4"	DETOUR
	G28-1(4)	24" x 24"	4		"99" SHIELD
	M3-1	30" x 15"	4		SOUTH
(E)	SC3 (CA)	36" x 12"	1	1 - 4" x 4"	DETOUR WITH ARROW
(F)	M4-8a	24" x 12"	1	1 - 4" x 4"	END DETOUR

TRAFFIC DETOUR PLAN

1. SB ROUTE 99 CLOSED
2. TAKE ACAMPO Rd OFF-RAMP
3. TURN RIGHT ON ACAMPO Rd
4. TURN LEFT ONTO FRONTAGE Rd
5. CONTINUE ON FRONTAGE Rd PAST WOODBRIDGE Rd
6. TURN LEFT ONTO SB ROUTE 99

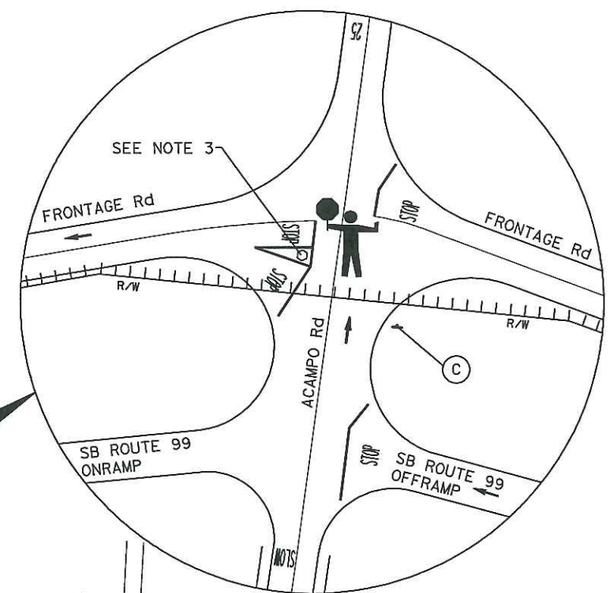

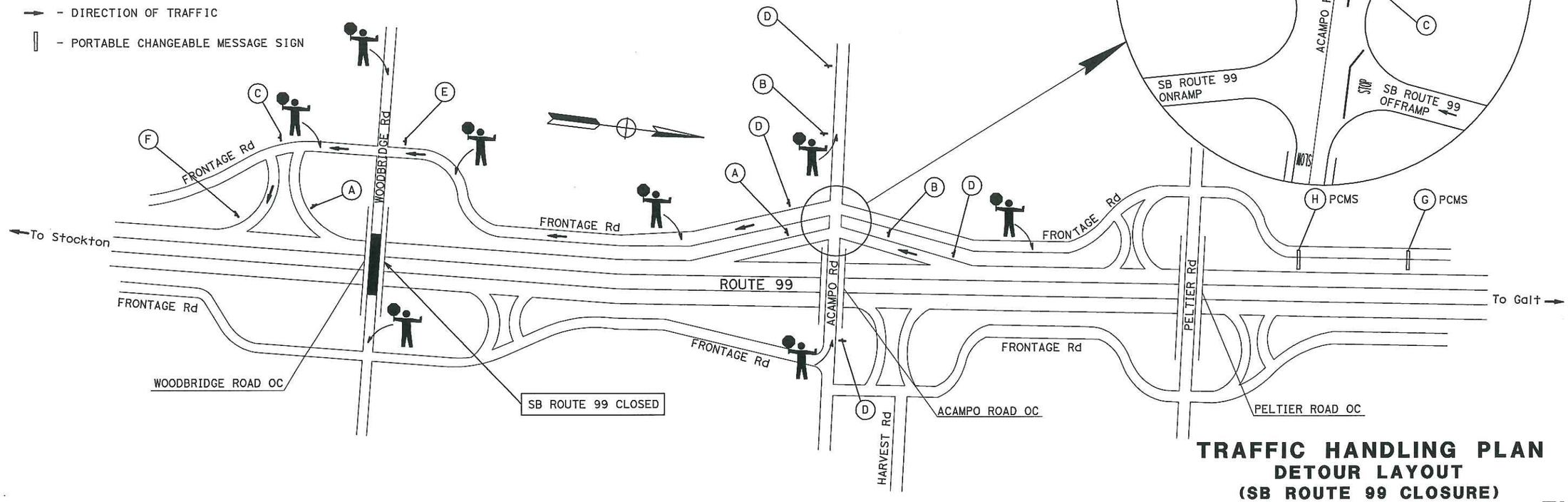

TRAFFIC HANDLING PLAN
DETOUR LAYOUT
(SB ROUTE 99 CLOSURE)

NO SCALE

TH-1

APPROVED FOR SJ COUNTY PERMIT ONLY

STATE OF CALIFORNIA - DEPARTMENT OF TRANSPORTATION
Caltrans MAINTENANCE

FUNCTIONAL SUPERVISOR: ALVIN MANGINDIN
CALCULATED-DESIGNED BY: RHODEL De CLARO
CHECKED BY: QUAN H TRINH
REVISED BY: RDC
DATE REVISED: 5/16/12

LAST REVISION 00-00-00
DATE PLOTTED => 16-MAY-2012
TIME PLOTTED => 13:16

Dist	COUNTY	ROUTE	POST MILES TOTAL PROJECT	SHEET No.	TOTAL SHEETS
10	SJ	99	32.6	2	15

REGISTERED CIVIL ENGINEER 9/17/11 DATE

12-12-11
PLANS APPROVAL DATE

REGISTERED PROFESSIONAL ENGINEER RHODEL De CLARO No. 74058 Exp. 6/30/13 CIVIL STATE OF CALIFORNIA

THE STATE OF CALIFORNIA OR ITS OFFICERS OR AGENTS SHALL NOT BE RESPONSIBLE FOR THE ACCURACY OR COMPLETENESS OF SCANNED COPIES OF THIS PLAN SHEET.

NOTES:

1. EXACT SIGN LOCATIONS TO BE DETERMINED BY ENGINEER.
2. * ADVANCED SPECIAL MESSAGE ADVISORY SIGN AT RAMPS.
3. THE STOP SIGN AND MOUNTING BASE SHALL BE REMOVED DURING DETOUR AND REPLACED WITH A TEMPORARY SIGN.
4. WHEN DETOUR IS NOT IN USE, COVER ALL CONFLICTING ROADSIDE SIGNS EXCEPT SC6-4.
5. ALL TEMPORARY SIGNS SHALL COMPLEMENT STANDARD PLANS T10A, T13 AND T14.
6. DURING THE SB ROUTE 99 CLOSURE,

THE PCMS MESSAGE AT (G) SHOULD READ:

ROAD WORK AHEAD	→	FWY CLOSED AHEAD
1ST FRAME		2ND FRAME

THE PCMS MESSAGE AT (H) SHOULD READ:

FWY CLOSED AHEAD	→	FOLLOW DETOUR
1ST FRAME		2ND FRAME

LEGEND

- ◯ - SIGN No.
- ⊣ - CONSTRUCTION AREA SIGNS (PORTABLE)
- → - DIRECTION OF TRAFFIC
- ▯ - PORTABLE CHANGEABLE MESSAGE SIGN

CONSTRUCTION AREA SIGNS (PORTABLE)

SIGN No.	SIGN CODE	PANEL SIZE	No. OF SIGNS	No. OF POSTS AND SIZE	SIGN MESSAGE
(A)*	SC6-4(CA)	48" x 60"	2	1 - 6" x 6"	"RAMP CLOSED INFO"
(B)	M4-10(R+)	48" x 18"	2	1 - 4" x 4"	DETOUR (ARROW)
(C)	M4-10(L+)	48" x 18"	2	1 - 4" x 4"	DETOUR (ARROW)
(D)	M4-8	24" x 12"	4	1 - 4" x 4"	DETOUR
	G28-1(4)	24" x 24"	4		"99" SHIELD
	M3-1	30" x 15"	4		SOUTH
(E)	SC3 (CA)	36" x 12"	1	1 - 4" x 4"	DETOUR WITH ARROW
(F)	M4-8a	24" x 12"	1	1 - 4" x 4"	END DETOUR

TRAFFIC DETOUR PLAN

1. SB ROUTE 99 CLOSED
2. TAKE ACAMPO Rd OFF-RAMP
3. TURN RIGHT ON ACAMPO Rd
4. TURN LEFT ONTO FRONTAGE Rd
5. CONTINUE ON FRONTAGE Rd PAST WOODBRIDGE Rd
6. TURN LEFT ONTO SB ROUTE 99

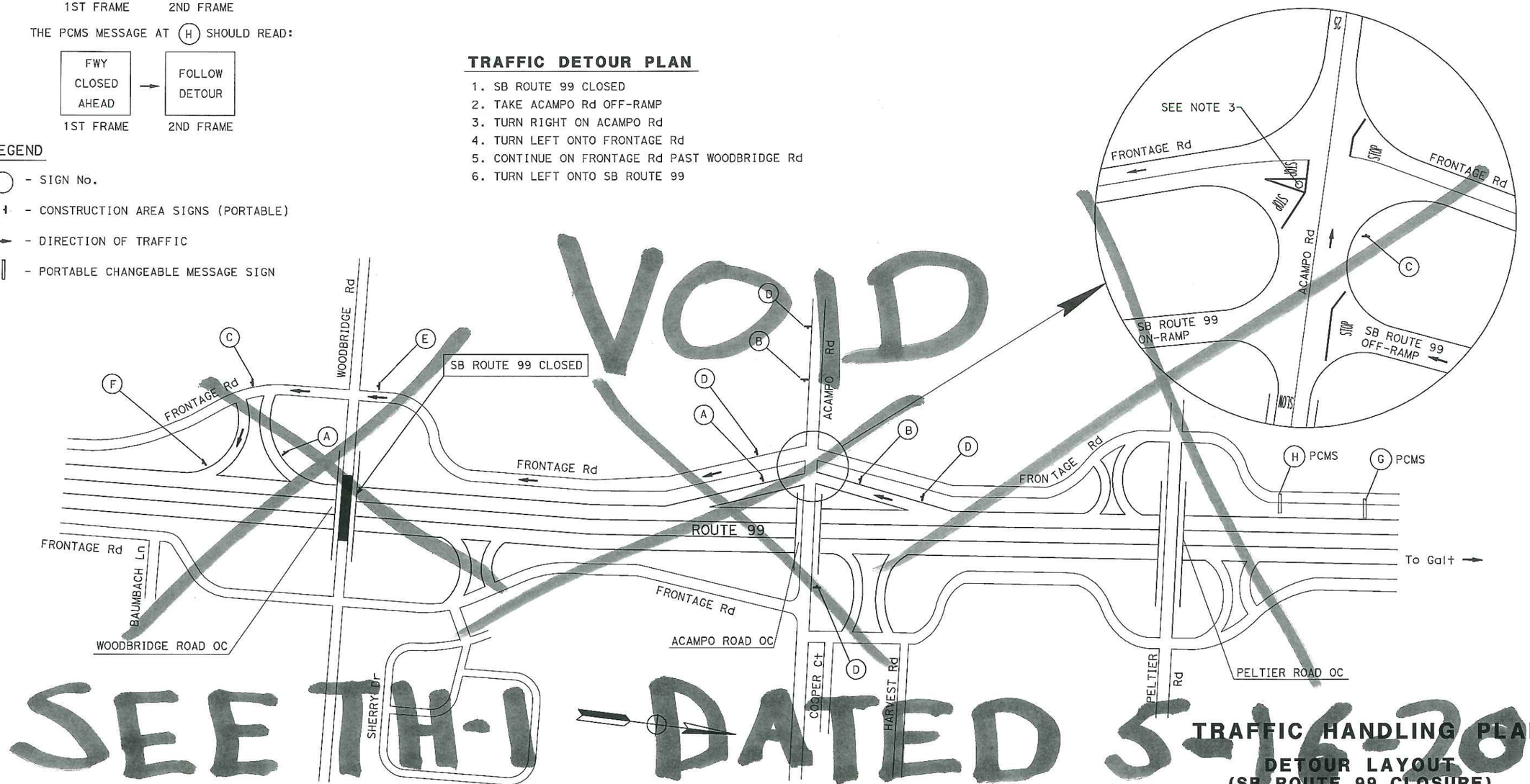

VOID

SEE TH-1 - DATED 5-16-2012

APPROVED FOR TRAFFIC HANDLING WORK ONLY

TRAFFIC HANDLING PLAN
DETOUR LAYOUT
(SB ROUTE 99 CLOSURE)

NO SCALE

TH-1

STATE OF CALIFORNIA - DEPARTMENT OF TRANSPORTATION	Caltrans MAINTENANCE
FUNCTIONAL SUPERVISOR	ALVIN MANGINDIN
CALCULATED-DESIGNED BY	RHODEL De CLARO
CHECKED BY	JOSE A ALICEA II
REVISED BY	RDC
DATE REVISED	9/16/11

LAST REVISION 00-00-00 | DATE PLOTTED => 14-DEC-2011 | TIME PLOTTED => 13:18

Dist	COUNTY	ROUTE	POST MILES TOTAL PROJECT	SHEET No.	TOTAL SHEETS
10	SJ	99	32.6	3	15

Rhodel De Claro 9/17/11
REGISTERED CIVIL ENGINEER DATE

12-12-11
PLANS APPROVAL DATE

REGISTERED PROFESSIONAL ENGINEER RHODEL De CLARO No. 74058 Exp 6/30/13 CIVIL STATE OF CALIFORNIA

THE STATE OF CALIFORNIA OR ITS OFFICERS OR AGENTS SHALL NOT BE RESPONSIBLE FOR THE ACCURACY OR COMPLETENESS OF SCANNED COPIES OF THIS PLAN SHEET.

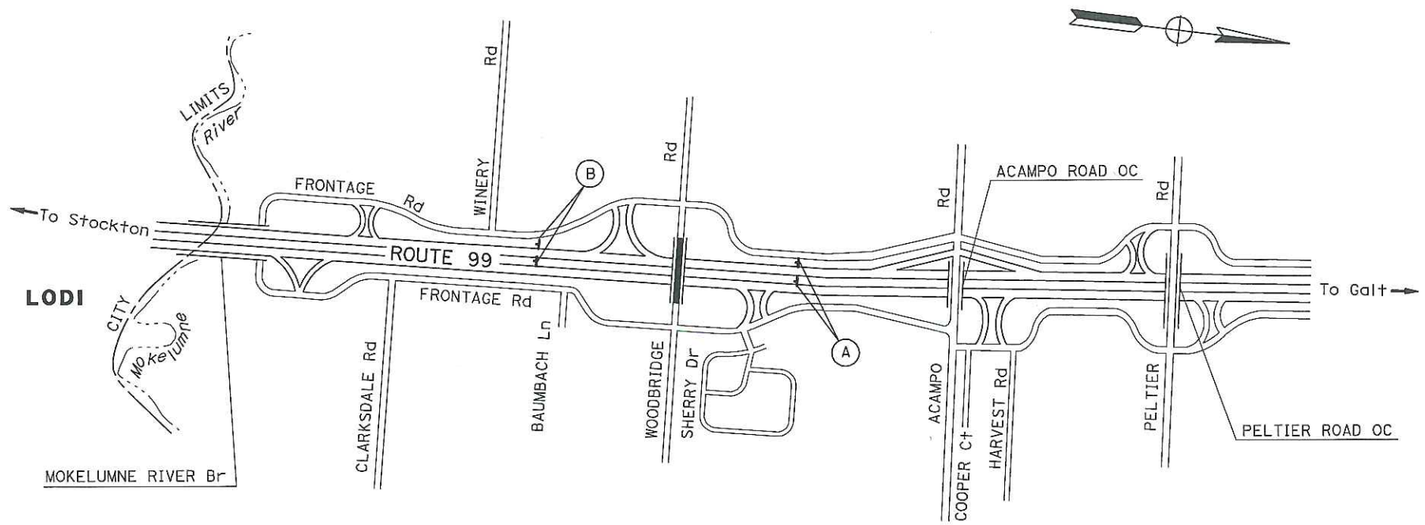

STATIONARY MOUNTED CONSTRUCTION AREA SIGNS

SIGN	SIGN CODE	PANEL SIZE	No. OF POSTS AND SIZE	No. OF SIGNS	SIGN MESSAGE
A	W20-1	48" X 48"	1 - 4" x 6"	2	ROAD WORK AHEAD
B	G20-2	48" x 24"	1 - 4" x 4"	2	END ROAD WORK

NOTE: EXACT SIGN LOCATIONS TO BE DETERMINED BY THE ENGINEER.

SIGN QUANTITIES

LOCATION	RESET ROADSIDE SIGN
	EA
FRONTAGE ROAD	1
TOTAL	1

TRAFFIC MANAGEMENT SYSTEM ELEMENTS (EXISTING)

LOCATION	PM	SIDE	TYPE	DESCRIPTION
ROUTE 99	32.50	NB	LOOP	TRAFFIC MONITORING STATION
ROUTE 99	32.50	SB	LOOP	TRAFFIC MONITORING STATION

APPROVED FOR CONSTRUCTION AREA SIGN WORK ONLY

CONSTRUCTION AREA SIGNS AND SUMMARY OF QUANTITIES

NO SCALE

CS-1

STATE OF CALIFORNIA - DEPARTMENT OF TRANSPORTATION
Caltrans® MAINTENANCE

CALCULATED-DESIGNED BY	RHODEL De CLARO	REVISED BY	RDC
CHECKED BY	JOSE A ALICEA II	DATE REVISED	9/16/11
FUNCTIONAL SUPERVISOR	ALVIN MANGINDIN		

LAST REVISION 00-00-00 | DATE PLOTTED => 14-DEC-2011 | TIME PLOTTED => 13:18

Dist	COUNTY	ROUTE	POST MILES TOTAL PROJECT	SHEET No.	TOTAL SHEETS
10	SJ	99	32.6	4	15

REGISTERED CIVIL ENGINEER 9/19/11 DATE

12-12-11
PLANS APPROVAL DATE

REGISTERED PROFESSIONAL ENGINEER HUE NGUYEN No. 74484 Exp. 12/31/13 CIVIL STATE OF CALIFORNIA

THE STATE OF CALIFORNIA OR ITS OFFICERS OR AGENTS SHALL NOT BE RESPONSIBLE FOR THE ACCURACY OR COMPLETENESS OF SCANNED COPIES OF THIS PLAN SHEET.

NOTES:

FOR LOCATION AND BRIDGE MOUNTED SIGN DETAILS SEE STRUCTURE SHEET.

Ⓐ G83-4(CA)

NO BORDER, WHITE ON GREEN;
3.0" RADIUS, 2.0" BORDER, WHITE ON GREEN;
[EXIT] E; [267A] E;
12.0" RADIUS, 2.0" BORDER, WHITE ON GREEN;
[Lodi] E Mod; [Turner Rd] E Mod; [EXIT 3/4] E Mod; [MILE] E;

SIGN A

Ⓑ G85-10(CA)

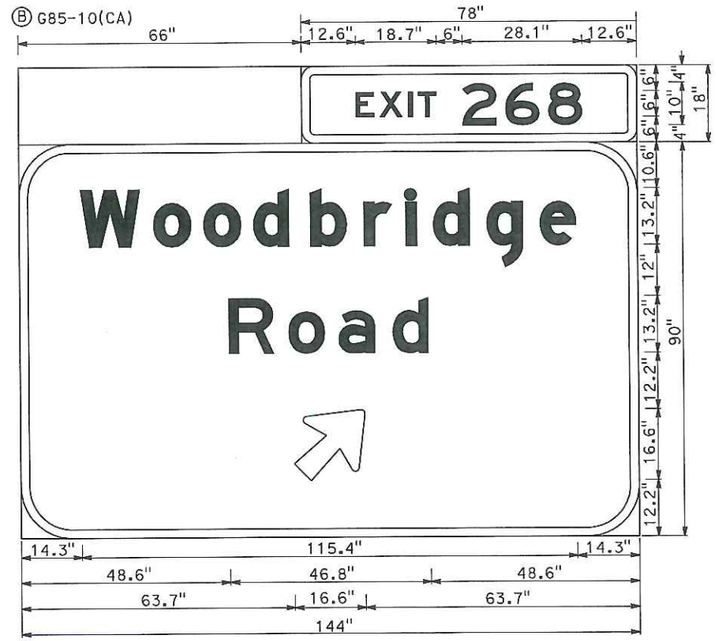

NO BORDER, WHITE ON GREEN;
3.0" RADIUS, 2.0" BORDER, WHITE ON GREEN;
[EXIT] E; [268] E;
G85-10(CA); 12.0" RADIUS, 2.0" BORDER, WHITE ON GREEN;
[Woodbridge] E Mod; [Road] E; Arrow 13.33UC-1L - 20.3" 45°;

SIGN B

SIGN ITEMS

SIGN	SIGN CODE	LOCATION	PANEL SIZE	SIGN PANEL: SINGLE FACED	SIGN PANEL: DOUBLE FACED	SIGN PANEL: BACKGROUND SHEETING COLOR	SIGN PANEL: BACKGROUND RETROREFLECTIVITY ASTM TYPE	SIGN PANEL: LEGEND SHEETING COLOR	SIGN PANEL: LEGEND RETROREFLECTIVITY ASTM TYPE	SIGN PANEL: GRAFFITI FLOW STANDARD	SIGN PANEL: GRAFFITI FLOW PREMIUM	FURNISH LAMINATED SIGN PANEL (1"-TYPE A)	REMOVE SIGN PANEL	REMOVE ROADSIDE SIGN
												SQFT	EA	EA
Ⓐ	G83-1(CA) G83-4(CA)	FSBT PM 32.57	144" x 108"	X		GREEN	VII	WHITE	VII		X	108	1	
Ⓑ	G85-11(CA) G85-10(CA)	FSBT PM 32.57	144" x 108"	X		GREEN	XI	WHITE	XI		X	108		1
TOTAL												216	1	1

SIGN DETAILS AND QUANTITIES

SD-1

STATE OF CALIFORNIA - DEPARTMENT OF TRANSPORTATION
Caltrans® TRAFFIC DESIGN

FUNCTIONAL SUPERVISOR: MOHAMMED QATAMI
CALCULATED-DESIGNED BY: HUE NGUYEN
CHECKED BY: FERNANDO LOPEZ
REVISED BY: HN
DATE REVISED: 9/19/11

LAST REVISION 00-00-00
DATE PLOTTED => 14-DEC-2011
TIME PLOTTED => 13:18

Dist	COUNTY	ROUTE	POST MILES TOTAL PROJECT	SHEET No.	TOTAL SHEETS
10	SJ	99	32.6	5	15

REGISTERED ELECTRICAL ENGINEER 9/19/11 DATE

12-12-11
PLANS APPROVAL DATE

REGISTERED PROFESSIONAL ENGINEER Jaspal Singh No. E16657 Exp. 9/30/12 ELECTRICAL STATE OF CALIFORNIA

THE STATE OF CALIFORNIA OR ITS OFFICERS OR AGENTS SHALL NOT BE RESPONSIBLE FOR THE ACCURACY OR COMPLETENESS OF SCANNED COPIES OF THIS PLAN SHEET.

LEGEND:

1 Exist TYPE A SERVICE.

2 INSTALL 240 V, 1-85 W ISL.

3 Exist OH ILLUMINATED SIGN, RS Exist mv LAMP FIXTURE AND FITTINGS TO THE DSE. INSTALL 240 V, 1-85 W ISL.

4 Exist MODIFIED tdc CABINET FOR mvds.

ABBREVIATIONS:

DSE - DISCONNECTING SWITCH ENCLOSURE

PG&E - PACIFIC GAS AND ELECTRIC COMPANY

MVDS - MICROWAVE VEHICLE DETECTION SYSTEM

NOTES:

1. FOR SIGN DETAIL, SEE SHEET SD-1.
2. FOR ACCURATE RIGHT OF WAY DATA, CONTACT RIGHT OF WAY ENGINEERING AT THE DISTRICT OFFICE.

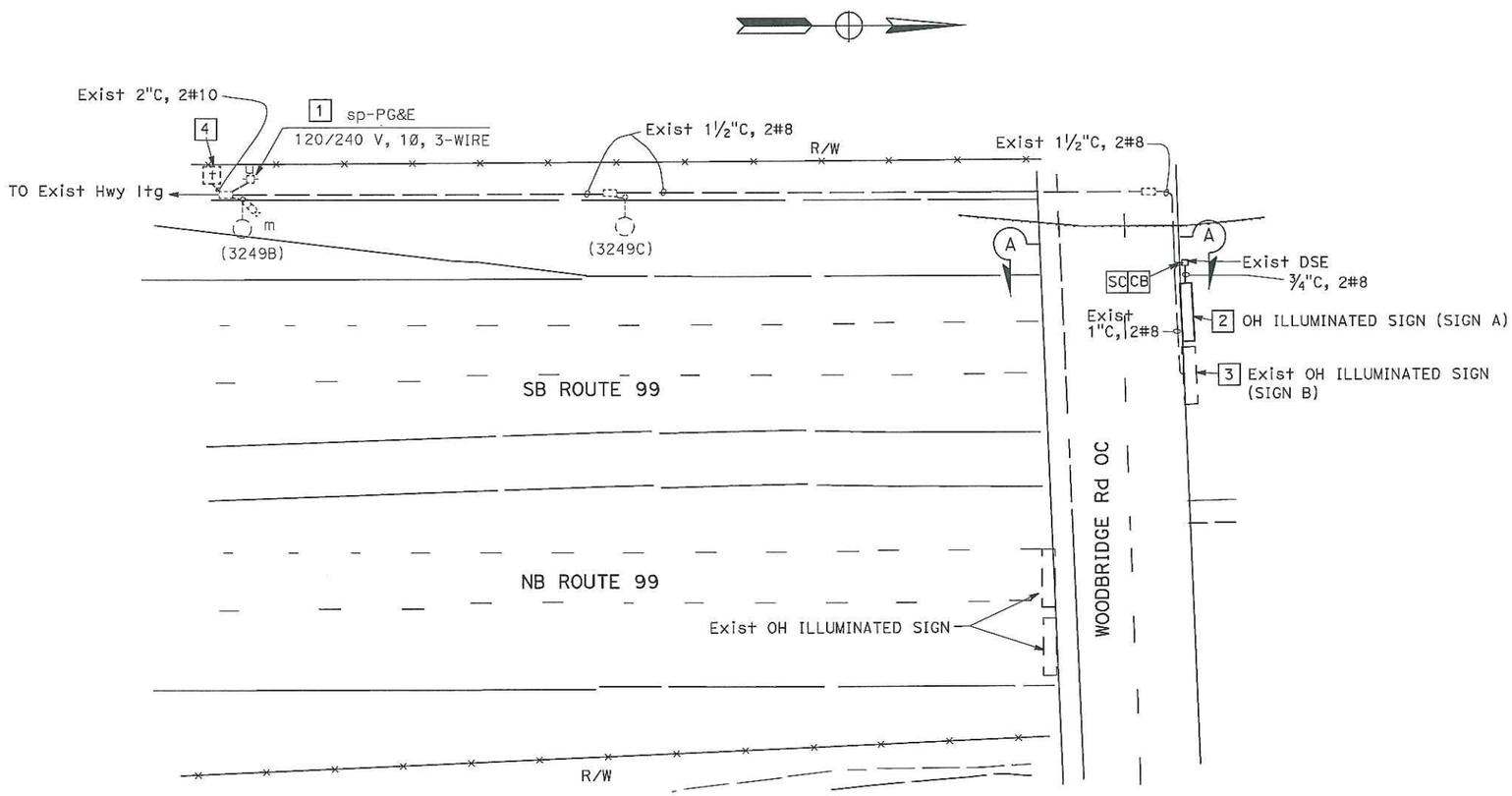

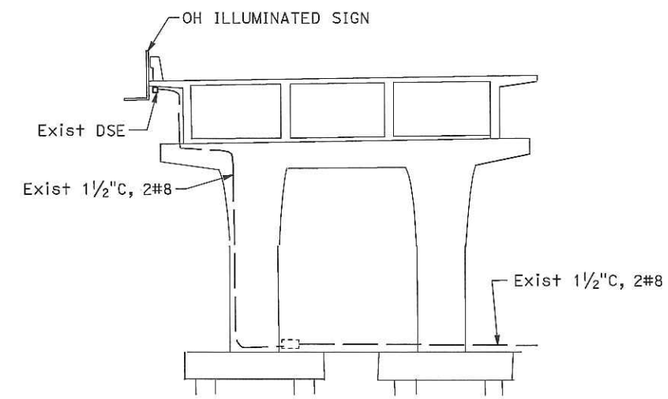

WOODBRIDGE Rd OC
SECTION A-A

APPROVED FOR ELECTRICAL WORK ONLY

MODIFY SIGN ILLUMINATION

NO SCALE

E-1

REVISED BY	JS
DATE REVISED	9/19/11
JASPAL SINGH	
FRED IYASERE	
CALCULATED-DESIGNED BY	
CHECKED BY	
FUNCTIONAL SUPERVISOR	
ALI BAKHDOUD	

STATE OF CALIFORNIA - DEPARTMENT OF TRANSPORTATION
Caltrans® **ELECTRICAL DESIGN**

LAST REVISION 07-25-11
DATE PLOTTED => 14-DEC-2011
TIME PLOTTED => 14:09

DIST	COUNTY	ROUTE	POST MILES TOTAL PROJECT	SHEET NO.	TOTAL SHEETS
10	SJ	99	32.6	6	15

Randell D. Hiatt
REGISTERED CIVIL ENGINEER

June 6, 2008
PLANS APPROVAL DATE

REGISTERED PROFESSIONAL ENGINEER Randell D. Hiatt No. C50200 Exp. 6-30-09 CIVIL STATE OF CALIFORNIA

The State of California or its officers or agents shall not be responsible for the accuracy or completeness of electronic copies of this plan sheet.

To accompany plans dated 12-12-11

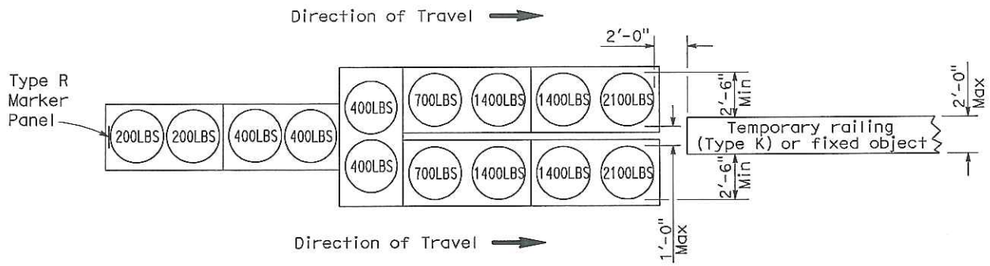

ARRAY 'TU14'

Approach speed 45 mph or more

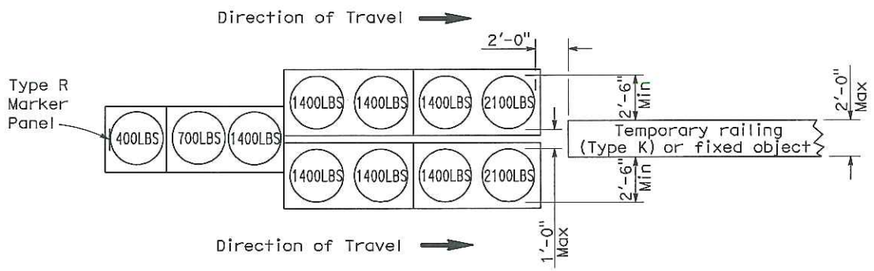

ARRAY 'TU11'

Approach speed less than 45 mph

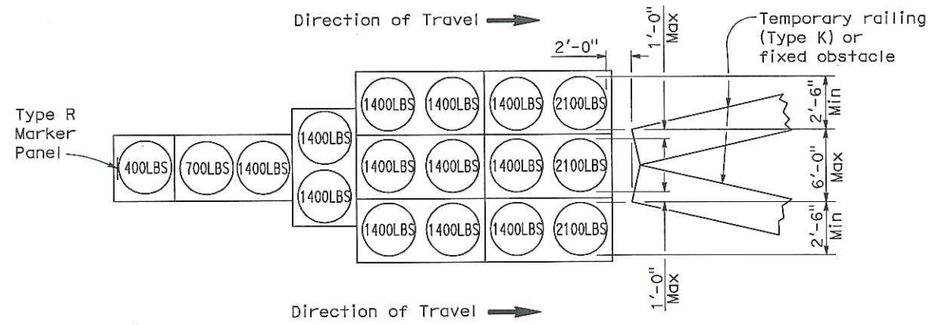

ARRAY 'TU17'

Approach speed less than 45 mph

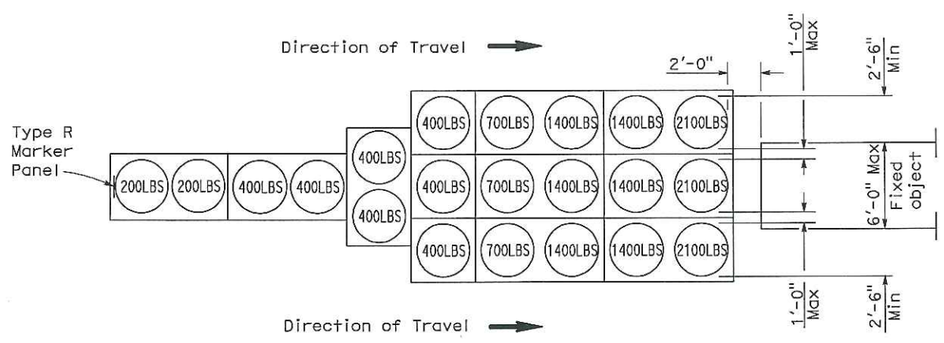

ARRAY 'TU21'

Approach speed 45 mph or more

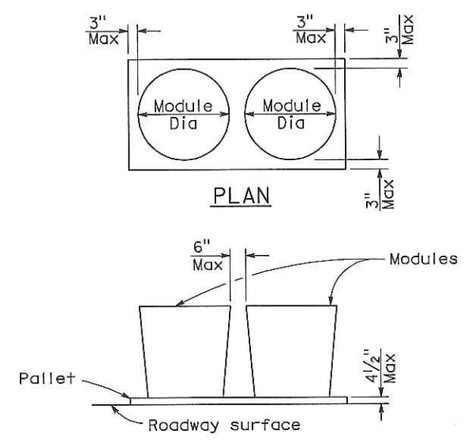

CRASH CUSHION PALLET DETAIL

See Note 7

NOTES:

1. (XXX) Indicates sand filled module location and weight of sand in pounds for each module. Module spacing is based on the greater diameter of the module.
2. All sand weights are nominal.
3. Temporary crash cushion arrays shall not encroach on the traveled way.
4. Place the top of Type R marker panel 1" below the module lid.
5. Refer to Standard Plan A73B for marker details.
6. Approach speeds indicated conform to NCHRP 350 Report criteria.
7. Use of pallets is optional.

STATE OF CALIFORNIA
DEPARTMENT OF TRANSPORTATION

TEMPORARY CRASH CUSHION, SAND FILLED (UNIDIRECTIONAL)

NO SCALE

RSP T1A DATED JUNE 6, 2008 SUPERSEDES STANDARD PLAN T1A
DATED MAY 1, 2006 - PAGE 211 OF THE STANDARD PLANS BOOK DATED MAY 2006.

REVISED STANDARD PLAN RSP T1A

2006 REVISED STANDARD PLAN RSP T1A

5-15-08

DIST	COUNTY	ROUTE	POST MILES TOTAL PROJECT	SHEET NO.	TOTAL SHEETS
10	SJ	99	32.6	7	15

Randell D. Hiatt
REGISTERED CIVIL ENGINEER

June 6, 2008
PLANS APPROVAL DATE

REGISTERED PROFESSIONAL ENGINEER
Randell D. Hiatt
No. C50200
Exp. 6-30-09
CIVIL
STATE OF CALIFORNIA

The State of California or its officers or agents shall not be responsible for the accuracy or completeness of electronic copies of this plan sheet.

To accompany plans dated 12-12-11

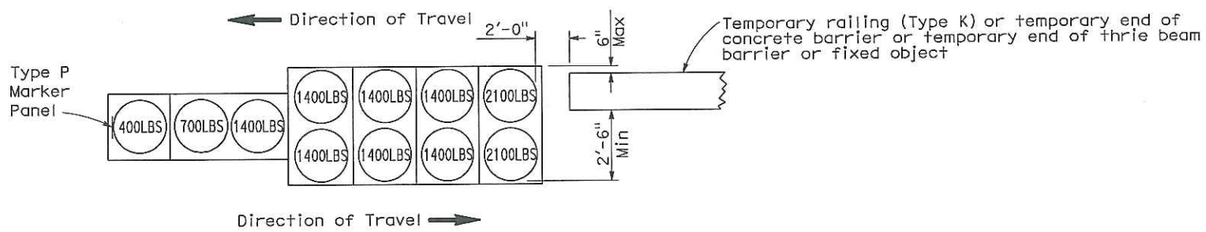

ARRAY 'TB11'

Approach speed less than 45 mph

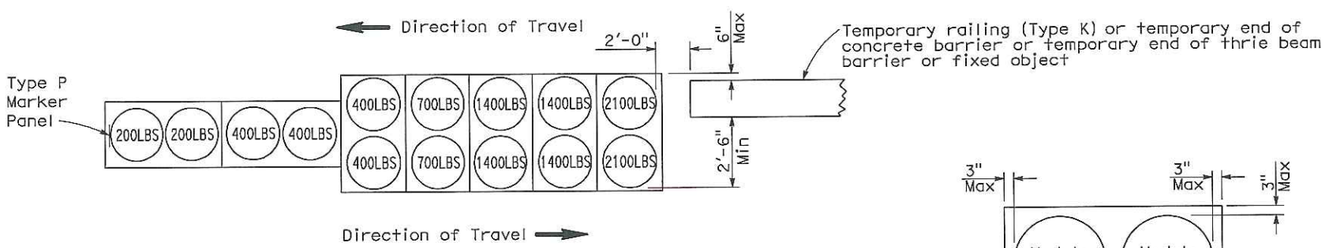

ARRAY 'TB14'

Approach speed 45 mph or more

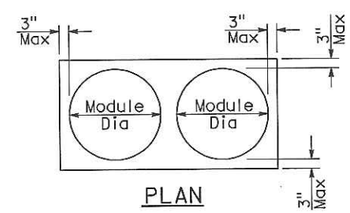

PLAN

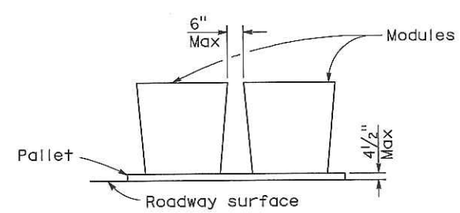

ELEVATION

CRASH CUSHION PALLET DETAIL

See Note 7

NOTES:

1. (XXX) Indicates sand filled module location and weight of sand in pounds for each module. Module spacing is based on the greater diameter of the module.
2. All sand weights are nominal.
3. Temporary crash cushion arrays shall not encroach on the traveled way.
4. Place the Type P marker panel so that the bottom of the panel rests upon the pallet.
5. Refer to Standard Plan A73B for marker details.
6. Approach speeds indicated conform to NCHRP 350 Report criteria.
7. Use of pallets is optional.

STATE OF CALIFORNIA
DEPARTMENT OF TRANSPORTATION

TEMPORARY CRASH CUSHION, SAND FILLED (BIDIRECTIONAL)

NO SCALE

RSP T1B DATED JUNE 6, 2008 SUPERSEDES STANDARD PLAN T1B
DATED MAY 1, 2006 - PAGE 212 OF THE STANDARD PLANS BOOK DATED MAY 2006.

REVISED STANDARD PLAN RSP T1B

2006 REVISED STANDARD PLAN RSP T1B

5-15-08

DIST	COUNTY	ROUTE	POST MILES TOTAL PROJECT	SHEET NO.	TOTAL SHEETS
10	SJ	99	32.6	8	15

Randell D. Hiatt
REGISTERED CIVIL ENGINEER

June 6, 2008
PLANS APPROVAL DATE

REGISTERED PROFESSIONAL ENGINEER Randell D. Hiatt No. C50200 Exp. 6-30-09 CIVIL STATE OF CALIFORNIA

The State of California or its officers or agents shall not be responsible for the accuracy or completeness of electronic copies of this plan sheet.

To accompany plans dated 12-12-11

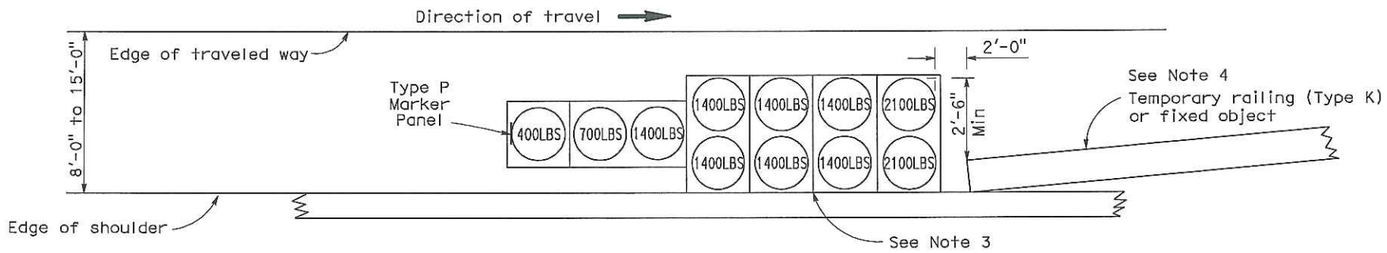

ARRAY 'TS11'

Approach speed less than 45 mph
See Note 9

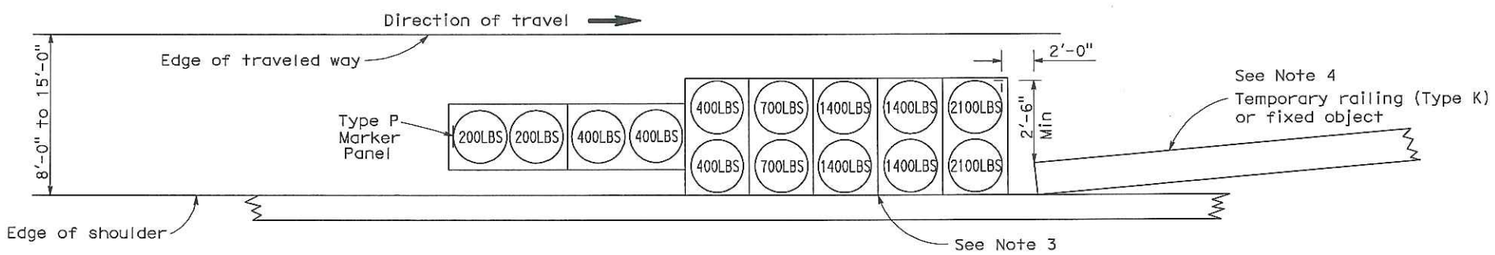

ARRAY 'TS14'

Approach speed 45 mph or more
See Note 9

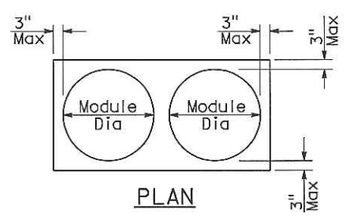

PLAN

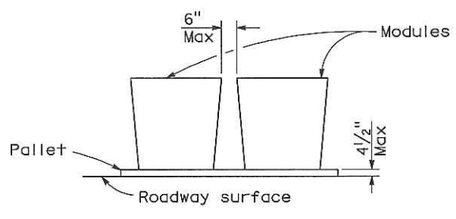

ELEVATION

CRASH CUSHION PALLET DETAIL

See Note 11

NOTES:

1. (XXX) Indicates sand filled module location and weight of sand in pounds for each module. Module spacing is based on the greater diameter of the module.
2. All sand weights are nominal.
3. The temporary crash cushion arrays shown on this plan shall be used only in locations where there will be traffic on one side of the temporary crash cushion array.
4. If the fixed object or approach end of the temporary railing is less than 15'-0" from the edge of traveled way, a temporary crash cushion is required in a construction or work zone.
5. Temporary crash cushion arrays shall not encroach on the traveled way.
6. Arrays for median shoulders shall conform to details shown on this plan for outside shoulders.
7. Place the Type P marker panel so that the bottom of the panel rests upon the pallet and faces traffic.
8. Refer to Standard Plan A73B for marker details.
9. For shoulder widths less than 8'-0", appropriate approved crash cushion protection, other than sand filled modules, shall be provided at fixed objects and at approach ends of temporary railing. The specific type of crash cushion shall be as shown on the project plans or as specified in the Special Provisions, or if not shown on the project plans or specified in the Special Provisions, shall be as approved by the Engineer.
10. Approach speeds indicated conform to NCHRP 350 Report criteria.
11. Use of pallets is optional.

STATE OF CALIFORNIA
DEPARTMENT OF TRANSPORTATION

TEMPORARY CRASH CUSHION, SAND FILLED (SHOULDER INSTALLATIONS)

NO SCALE

RSP T2 DATED JUNE 6, 2008 SUPERSEDES STANDARD PLAN T2
DATED MAY 1, 2006 - PAGE 213 OF THE STANDARD PLANS BOOK DATED MAY 2006.

REVISED STANDARD PLAN RSP T2

2006 REVISED STANDARD PLAN RSP T2

5-15-08

DIST	COUNTY	ROUTE	POST MILES TOTAL PROJECT	SHEET NO.	TOTAL SHEETS
10	SJ	99	32.6	9	15

REGISTERED ELECTRICAL ENGINEER

October 5, 2007
PLANS APPROVAL DATE

REGISTERED PROFESSIONAL ENGINEER Jeffery G. McRae No. E14512 Exp. 6-30-08 ELECTRICAL STATE OF CALIFORNIA

The State of California or its officers or agents shall not be responsible for the accuracy or completeness of electronic copies of this plan sheet.

To accompany plans dated 12-12-11

ELECTROLIERS

STANDARD TYPES
15, 15D
15 STRUCTURE
21, 21D STRUCTURE
30
31
32
35
36-20A

High mast light pole

Double Arm lighting standard

Existing electrolier

Electrolier foundation (Future installation)

NOTES:

1. Luminaires shall be 310 W HPS when installed on Type 21, 21D, 30, 31, 32, 35 and 36-20A Standards, unless otherwise specified. Luminaires shall be 200 W HPS when installed on other type standards or poles, unless otherwise specified.
2. Luminaires shall be the cutoff type, ANSI Type III medium cutoff lighting distribution, unless otherwise specified.
3. Variations noted adjacent to symbol on project plans.

Electrolier (see project notes or project plans)

Luminaire on wood pole

STANDARD NOTES:

- AB Abandon. If applied to conduit, remove conductors.
- BC Install pull box in existing conduit run.
- BP Pedestrian barricade, type as indicated on plan.
- CB Install conduit into existing pull box.
- CC Connect new and existing conduit. Remove existing conductors and install conductors as indicated.
- CF Conduit to remain for future use. Remove conductors. Install pull wire or rope.
- DH Detector handhole.
- FA Foundation to be abandoned.
- IS Install sign on signal mast arm.
- NS No slip base on standard.
- PEC Photoelectric control.
- PEU Photoelectric unit.
- RC Equipment or material to be removed and become the property of the Contractor.
- RE Remove electrolier, fuses and ballast. Tape ends of conductors.
- RL Relocate equipment.
- RR Remove and reuse equipment.
- RS Remove and salvage equipment.
- SC Splice new to existing conductors.
- SD Service disconnect.
- SF Standard to remain for future use. Remove luminaire, pole conductors, fuses and ballast.
- TSP Telephone service point.

ABBREVIATIONS AND EQUIPMENT DESIGNATIONS

PROPOSED	EXISTING	
BBS	bbs	Battery backup system
BC	bc	Bolt circle
C	C	Conduit
CCTV	cctv	Closed circuit television
CKT	ckt	Circuit
CMS	cms	Changeable message sign
DLC	dlc	Loop detector lead-in cable
EMS	ems	Extinguishable message sign
EVC	evc	Emergency vehicle cable
EVD	evd	Emergency vehicle detector
FB	fb	Flashing beacon
FBCA	fbca	Flashing beacon control assembly
FBS	fbs	Flashing beacon with slip base
FO	fo	Fiber optic
G	G	Ground (Equipment Grounding Conductor)
GFCI	GFCI	Ground fault circuit interrupt
HAR	har	Highway advisory radio
HEX	hex	Hexagonal
HPS	hps	High pressure sodium
IISNS	iisns	Internally illuminated street name sign
ISL	isl	Induction sign lighting
LED	led	Light emitting diode
LMA	lma	Luminaire mast arm
LPS	lps	Low pressure sodium
LTG	ltg	Lighting
LUM	lum	Luminaire
MAT	mat	Mast arm mounting vehicle signal faces, top attachment
MAS	mas	Mast arm mounting vehicle signal faces, side attachment
MAS-4A MAS-4B MAS-4C	mas-4A mas-4B mas-4C	Mast arm mounting vehicle signal faces, side attachment - 4 signal section
MAS-5A MAS-5B	mas-5A mas-5B	Mast arm mounting vehicle signal faces, side attachment - 5 signal section
MC	mc	Mercury contactor
M/M	m/m	Multiple to multiple transformer
MT	mt	Conduit with pull wire or rope only
MTG	mtg	Mounting
	mv	Mercury vapor lighting fixture
N	N	Neutral (Grounded Conductor)
NC	NC	Normally closed
NO	NO	Normally open
PB	pb	Pull box
PEC	pec	Photoelectric control (Type I, II, III, IV or V as shown)
PED	ped	Pedestrian
PEU	peu	Photoelectric unit
PPB	ppb	Pedestrian push button
RL		Relocated equipment
RM	rm	Ramp metering
SB	sb	Slip base
SIC	sic	Signal interconnect cable
SIG	sig	Signal
SMA	sma	Signal mast arm
SNS	sns	Street name sign
SP	sp	Service point
TDC	tdc	Telephone demarcation cabinet
TMS	tms	Traffic monitoring station
TOS	tos	Traffic Operations System
VEH	veh	Vehicle
XFMR	xfmr	Transformer
COMM	comm	Communication
RWIS	rwis	Roadway weather information system

SOFFIT AND WALL MOUNTED LUMINAIRES

Pendant, 70 W HPS unless otherwise specified.

Flush, 70 W HPS unless otherwise specified.

Wall surface, 70 W HPS unless otherwise specified.

Existing soffit or wall luminaire to remain unmodified.

Existing soffit or wall luminaire to be modified as specified.

NOTE:

Arrow indicates "street side" of luminaire.

STATE OF CALIFORNIA
DEPARTMENT OF TRANSPORTATION

ELECTRICAL SYSTEMS (SYMBOLS AND ABBREVIATIONS)

NO SCALE

RSP ES-1A DATED OCTOBER 5, 2007 SUPERSEDES STANDARD PLAN ES-1A DATED MAY 1, 2006 - PAGE 400 OF THE STANDARD PLANS BOOK DATED MAY 2006.

REVISED STANDARD PLAN RSP ES-1A

2006 REVISED STANDARD PLAN RSP ES-1A

7-10-07

DIST	COUNTY	ROUTE	POST MILES TOTAL PROJECT	SHEET NO.	TOTAL SHEETS
10	SJ	99	32.6	10	15

REGISTERED ELECTRICAL ENGINEER

October 5, 2007
PLANS APPROVAL DATE

REGISTERED PROFESSIONAL ENGINEER Jeffery G. McRae No. E14512 Exp. 6-30-08 ELECTRICAL STATE OF CALIFORNIA

The State of California or its officers or agents shall not be responsible for the accuracy or completeness of electronic copies of this plan sheet.

To accompany plans dated 12-12-11

CONDUIT

PROPOSED	EXISTING	
		Lighting Conduit, unless otherwise indicated or noted
		Traffic signal conduit
—C—	—c—	Communication conduit
—T—	—t—	Telephone conduit
—F—	—f—	Fire alarm conduit
—FO—	—fo—	Fiber optic conduit
		Conduit termination (RSP ES-9A C)
R	r	Conduit riser in/on structure or service pole

SERVICE EQUIPMENT

PROPOSED	EXISTING	
OH	oh	Overhead lines
U	U	Wood pole "U" indicates utility owned
		Pole guy with anchor
		Utility transformer - ground mounted
III		Service equipment enclosure type
		Service equipment enclosure door indicates front of enclosure
T	t	Telephone demarcation cabinet

POLE-MOUNTED SERVICE DESIGNATION

Type of installation

TYPE H SERVICE - 28'-10" ← Pole height above grade

ILLUMINATED OVERHEAD SIGN

PROPOSED	EXISTING	
		Overhead sign - Single post
		Overhead sign - Two post
		Overhead sign - Mounted on structure
		Overhead sign with electrolier

SIGNAL EQUIPMENT

PROPOSED	EXISTING	
		Pedestrian signal face
		Pedestrian push button post
		Pedestrian barricade
		Vehicle signal face (with backplate, 3-Section: red, yellow and green)
		Vehicle signal face with angle visors
PV	PV	Modifications of basic symbols: "L" indicates all non-arrow sections louvered "LG" indicates louvered green section only "PV" indicates 12" programmed visibility sections "8" indicates all 8" sections (only when specified)
		Type 15TS and Vehicle signal face
		Vehicle signal face with red, yellow and green left arrow sections
		Vehicle signal face with red and yellow sections and up green arrow
		Vehicle signal face (5 Section) with red, yellow and green sections and yellow and green right arrows
		Type 1 Standard and attached vehicle signal faces
		Standard with signal mast arm only and attached vehicle signal faces and internally illuminated street name sign
		Type 33 Standard, Left-turn vehicle signal face and sign
		Standard with luminaire and signal mast arms and attached vehicle signal faces
		Cantilever flashing beacon Type 9 Frame, with a sign unless otherwise specified or indicated
		Type 15-FBS Standard with two vehicle signal face sections with lens, backplate and visor with a sign
R	Y	Flashing beacon. One vehicle signal face section with lens, backplate and visor. "R" indicates red indication, "Y" indicates yellow indication
		Controller assembly. Door indicates front of cabinet

SIGNAL EQUIPMENT Cont

PROPOSED	EXISTING	
		Guard post
		Type 1 Standard with "Meter On" sign
		Emergency Vehicle detector

NOTES:

1. All signal sections shall be 12" unless shown otherwise.
2. Signal heads shall be provided with backplates unless shown otherwise.
3. Signal indication shall be LED.

STATE OF CALIFORNIA
DEPARTMENT OF TRANSPORTATION

ELECTRICAL SYSTEMS (SYMBOLS AND ABBREVIATIONS)

NO SCALE

RSP ES-1B DATED OCTOBER 5, 2007 SUPERCEDES STANDARD PLAN ES-1B DATED MAY 1, 2006 - PAGE 401 OF THE STANDARD PLANS BOOK DATED MAY 2006.

REVISED STANDARD PLAN RSP ES-1B

2006 REVISED STANDARD PLAN RSP ES-1B

7-10-07

DIST	COUNTY	ROUTE	POST MILES TOTAL PROJECT	SHEET NO.	TOTAL SHEETS
10	SJ	99	32.6	11	15

REGISTERED ELECTRICAL ENGINEER

October 5, 2007
PLANS APPROVAL DATE

REGISTERED PROFESSIONAL ENGINEER Jeffery G. McRae No. E14512 Exp. 6-30-08 ELECTRICAL STATE OF CALIFORNIA

The State of California or its officers or agents shall not be responsible for the accuracy or completeness of electronic copies of this plan sheet.

To accompany plans dated 12-12-11

EQUIPMENT IDENTIFICATION

ILLUMINATED SIGN IDENTIFICATION NUMBER:

Sign No. 12345
10 ISL SCI 1.0

- Sign number - Place on post or structure
- Transformer rating (kVA)
- Lighting control type
- Number and type of fixtures

} Do NOT place on standard or structure

ELECTROLIER OR EQUIPMENT IDENTIFICATION NUMBER:

12345 - 15'-0"

- Mast arm length, if shown. Do not place on standard or structure.
- Equipment number - Place on standard or structure. Existing equipment numbers are shown in parenthesis

CONDUIT AND CONDUCTOR IDENTIFICATION:

1½"C, 2#10, 15#14, 2 DLC

- Number and size of conductors and cables
- Size of conduit in inches

Ø1, Ø2, Ø2P, etc.	Traffic phase identification for signal faces, detectors and phase diagrams
1 2 3	Project note numbers
A B C	Equipment description, installation or item numbers
1 2 3	Conduit run numbers

SIGNAL AND LIGHTING STANDARD (TYPICAL DESIGNATION):

19A - 3 - 100

- Wind velocity = 100 mph
- Case 3 arm loading
- Standard type
- Standard Plan sheet number
- Detail number or letter

MISCELLANEOUS EQUIPMENT

PROPOSED	EXISTING	
CMS	cms	Changeable message sign
		Closed circuit television camera
		Highway advisory radio pole and antenna
EMS	ems	Extinguishable message sign
M V	m v	Detection device M = Microwave sensor V = Video image sensor

WIRING DIAGRAM LEGEND

P	Pole
CB	Circuit breaker
A	Ampere
V	Volt
M	Metered
UM	Unmetered
NB	Neutral bus
GB	Ground bus
G	Equipment grounding conductor
N	Grounded conductor (Neutral)

- External conductor
- Conductor or bus
- Tie point
- Contactor coil
- Contactor, Contact NO
- Terminal blocks
- Contactor, Contact NC
- Enclosure bond
- Grounding electrode
- Circuit breaker
- Receptacle

PULL BOXES

PROPOSED	EXISTING	
		Pull box-No. 5 unless otherwise indicated or noted.
3	9A(21)	Pull box-Additional designations or descriptions

3 = No. 3½ pull box
5 = No. 5 pull box
6 = No. 6 pull box
7 = No. 7 (Ceiling pull box)
8 = No. 8 (Pendant soffit pull box)
9 = No. 9 pull box
9A = No. 9A pull box

(C) = Communications pull box
(E) = Pull box with extension
(S) = Sprinkler control pull box
(21) = Anchor bolts and conduit for future installation of Type 21 Standard
(T) = Traffic pull box

VEHICLE DETECTORS

5 J 9 U

- Vehicle detector designation
- U = Upper
  L = Lower
- Slot number in input file
- Input file (I or J)
- Phase

PROPOSED	EXISTING	
		Type A detector loop. Outline of sawcut shown.
		Type B detector loop. Outline of sawcut shown.
		Type C detector loop. Outline of sawcut shown.
		Type D detector loop. Outline of sawcut shown.
		Type E detector loop. Outline of sawcut shown.
		Type Q detector loop. Outline of sawcut shown.
		Magnetic detector
DH	dh	Detector handhole
		Microwave or video detection zone

STATE OF CALIFORNIA
DEPARTMENT OF TRANSPORTATION

ELECTRICAL SYSTEMS (SYMBOLS AND ABBREVIATIONS)

NO SCALE

RSP ES-1C DATED OCTOBER 5, 2007 SUPERCEDES STANDARD PLAN ES-1C DATED MAY 1, 2006 - PAGE 402 OF THE STANDARD PLANS BOOK DATED MAY 2006.

REVISED STANDARD PLAN RSP ES-1C

2006 REVISED STANDARD PLAN RSP ES-1C

7-10-07

DIST	COUNTY	ROUTE	POST MILES TOTAL PROJECT	SHEET No.	TOTAL SHEETS
10	SJ	99	32.6	12	15

Heidi Kuntz 9-22-11
REGISTERED CIVIL ENGINEER DATE

12-12-11
PLANS APPROVAL DATE

REGISTERED PROFESSIONAL ENGINEER Heidi Kuntz No. C62489 Exp. 9-30-13 CIVIL STATE OF CALIFORNIA

The State of California or its officers or agents shall not be responsible for the accuracy or completeness of electronic copies of this plan sheet.

STANDARD PLANS DATED MAY 2006

SHEET NO.	TITLE
A10A	ACRONYMS AND ABBREVIATIONS (SHEET 1 OF 2)
A10B	ACRONYMS AND ABBREVIATIONS (SHEET 2 OF 2)
S16	OVERHEAD SIGNS WALKWAY DETAILS No. 1
S17	OVERHEAD SIGNS WALKWAY DETAILS No. 2
S17A	OVERHEAD SIGNS WALKWAY DETAILS No. 3
S18	OVERHEAD SIGNS WALKWAY SAFETY RAILING DETAILS
S19	OVERHEAD SIGNS - TRUSS SIGN MOUNTING DETAILS LAMINATED PANEL - TYPE A

INDEX TO PLANS

SHEET NO.	TITLE
1	GENERAL PLAN
2	REPAIR DETAILS NO.1
3	BRIDGE MOUNTED SIGN DETAILS NO. 1
4	BRIDGE MOUNTED SIGN DETAILS NO. 2

NOTES:

-·-·-·-·- Indicates existing.

(1) Indicates limits of repair and heat straighten damaged girder. Remove existing paint prior to heat straightened operation.

✳ Remove and Replace existing sign and mounts. Replacement sign mount bolts to be placed minimum 9" upstation from existing sign mount bolts. Also maintain 1' clear distance between signs. See "BRIDGE MOUNTED SIGN DETAILS NO. 1" and "BRIDGE MOUNTED SIGN DETAILS NO. 2" sheets.

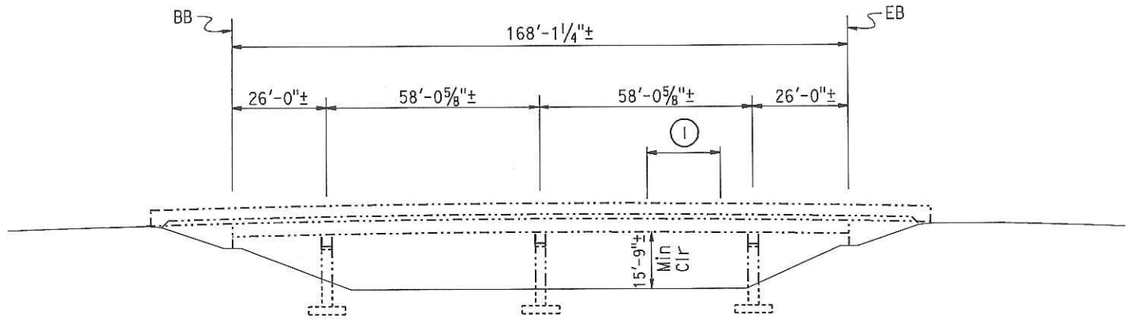

ELEVATION

1" = 20'

QUANTITIES

WOODBRIDGE ROAD OC BRIDGE NO. 29-0145

REMOVE BRIDGE MOUNTED SIGN	2	EA
REMOVE GROUT PAD	4	CF
SALVAGE SIGN MOUNTS	LUMP	SUM
PLACE GROUT PAD	4	CF
STRUCTURAL STEEL (BRIDGE)	444	LB
HEAT STRAIGHTEN STEEL GIRDER	LUMP	SUM
FURNISH SIGN STRUCTURE (BRIDGE MOUNTED WITH WALKWAY)	3,900	LB
INSTALL SIGN STRUCTURE (BRIDGE MOUNTED WITH WALKWAY)	3,900	LB
CLEAN AND PAINT STRUCTURAL STEEL	LUMP	SUM
SPOT BLAST CLEAN AND PAINT UNDERCOAT	101	SQFT

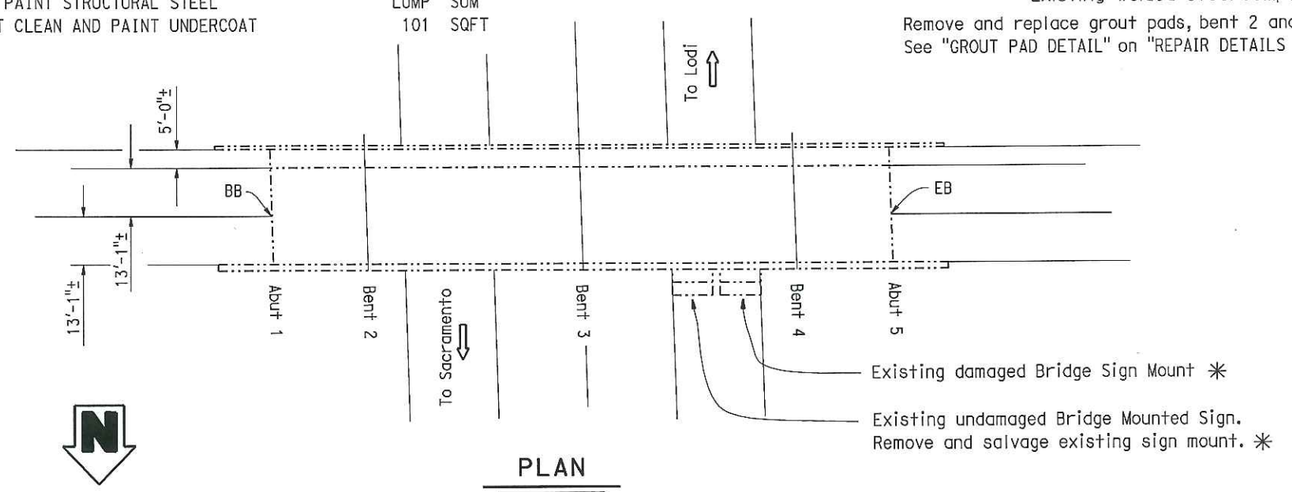

PLAN

1" = 20'

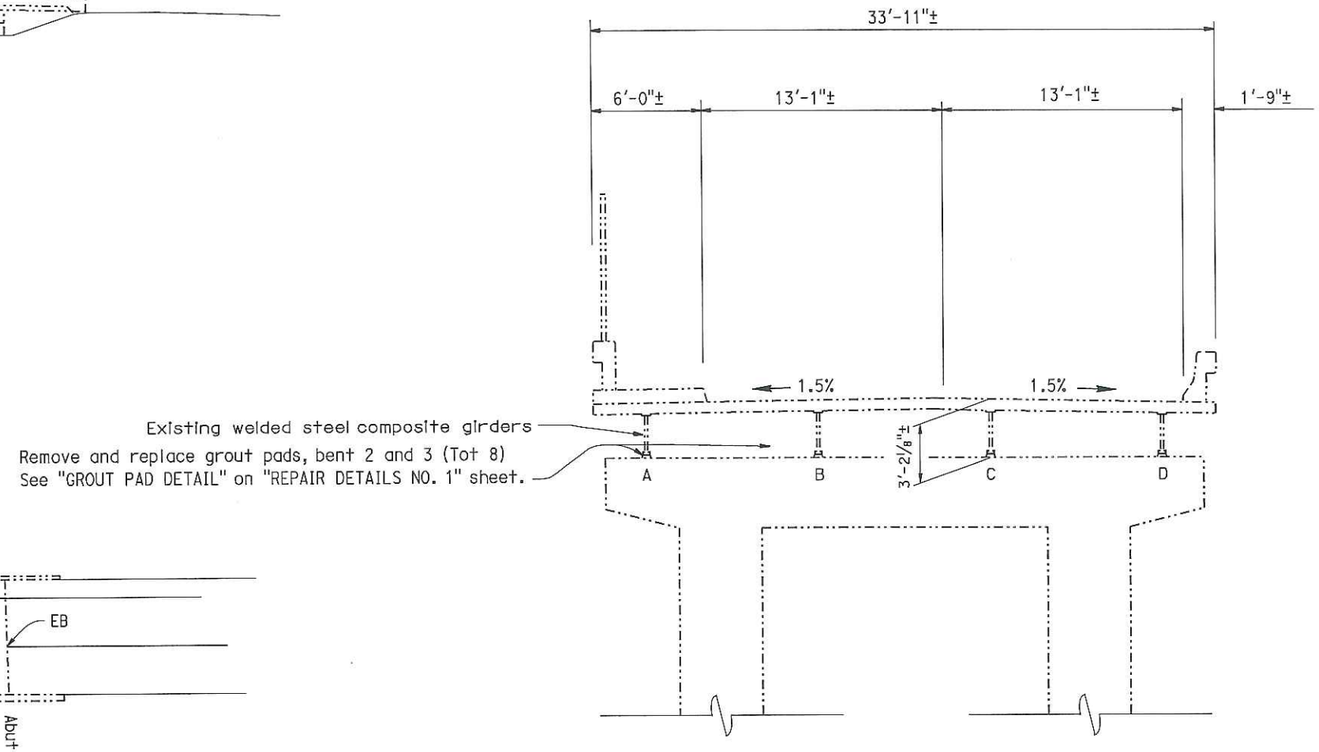

TYPICAL SECTION

¼" = 1'

Matthew W. Lee 9-22-11 DESIGN ENGINEER	DESIGN	BY Heidi Kuntz	CHECKED A. Frank	LOAD FACTOR DESIGN	LIVE LOADING: HS20-44 AND ALTERNATIVE AND PERMIT DESIGN LOAD	
	DETAILS	BY David Kish	CHECKED A. Frank	LAYOUT	BY David Kish	CHECKED A. Frank
	QUANTITIES	BY Heidi Kuntz	CHECKED A. Frank	SPECIFICATIONS	BY Erwin Ruffino	PLANS AND SPECS COMPARED Erwin Ruffino

STATE OF CALIFORNIA DEPARTMENT OF TRANSPORTATION

DIVISION OF MAINTENANCE STRUCTURE MAINTENANCE DESIGN

BRIDGE NO. 29-0145 POST MILE 32.57

WOODBRIDGE ROAD OVERCROSSING-HEAT STRAIGHTEN

GENERAL PLAN

STRUCTURES MAINTENANCE GENERAL PLAN SHEET (ENGLISH) (REV. 09-01-10)

ORIGINAL SCALE IN INCHES FOR REDUCED PLANS 0 1 2 3

UNIT: 3488
PROJECT NUMBER & PHASE: 1000020472
CONTRACT NO.: 10-0V5601

DISREGARD PRINTS BEARING EARLIER REVISION DATES

REVISION DATES 4-11-11 4-12-11 5-18-11

SHEET 1 OF 4

FILE => 10-0v5601_01gp.dgn

USERNAME => s128843 DATE PLOTTED => 14-DEC-2011 TIME PLOTTED => 12:46

DIST	COUNTY	ROUTE	POST MILES TOTAL PROJECT	SHEET No.	TOTAL SHEETS
10	SJ	99	32.6	13	15

Heidi Kuntz 9-22-11
REGISTERED CIVIL ENGINEER DATE

12-12-11
PLANS APPROVAL DATE

REGISTERED PROFESSIONAL ENGINEER Heidi Kuntz No. C62489 Exp. 9-30-13 CIVIL STATE OF CALIFORNIA

The State of California or its officers or agents shall not be responsible for the accuracy or completeness of electronic copies of this plan sheet.

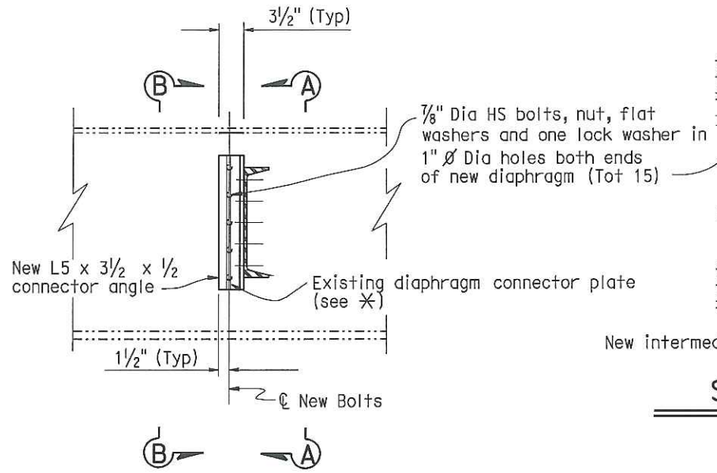

PARTIAL GIRDER "D" ELEVATION

1" = 1'

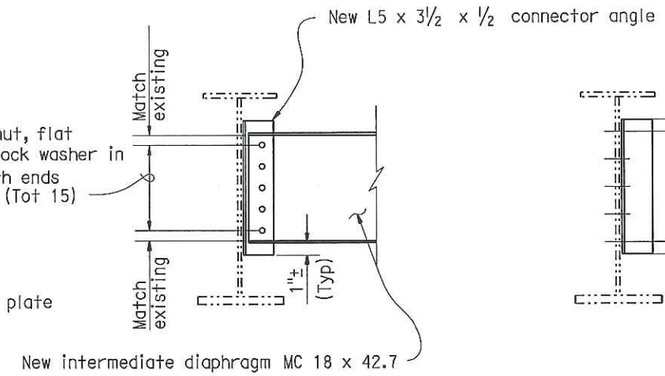

SECTION A-A

1" = 1'

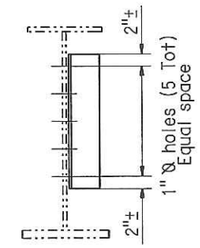

SECTION B-B

1" = 1'

GENERAL NOTES
LOAD FACTOR DESIGN

DESIGN:	BRIDGE DESIGN SPECIFICATIONS (1996 AASHTO with Interims and Revisions by CALTRANS)
DEAD LOAD:	Includes 35 psf for future wearing surface.
LIVE LOADING:	HS20-44 and alternative
STRUCTURAL STEEL:	f_y = 50,000 psi
HS THREADED BOLTS :	ASTM A325, Type I

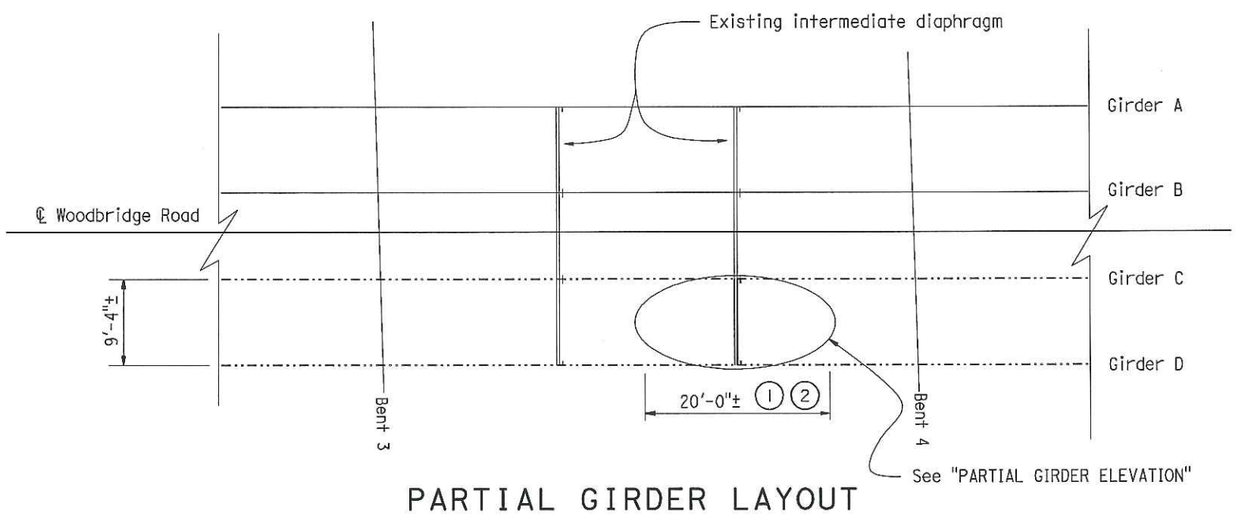

PARTIAL GIRDER LAYOUT

⅛" = 1'

NOTES:

-·-·-·-·- Indicates existing.

THE CONTRACTOR SHALL VERIFY ALL CONTROLLING FIELD DIMENSIONS BEFORE ORDERING OR FABRICATING ANY MATERIAL.

① Indicates limits of repair and heat straighten damaged girder. Remove existing paint prior to heat straightened operation.

② Existing damaged intermediate diaphragm and partial-height diaphragm connector plate total (1 each) to be replaced. Connector plate at girder C to remain and be reused. Replace ⅞" Dia HS bolts , nut, flat washer and one lock washer.

✳ Approximate location - weld lengths to be ground flush without damage to the existing girder. All areas ground flush shall have 2 undercoats of paint applied before finished coats.

All bolted connections between stiffeners and girder shall be bearing type connection

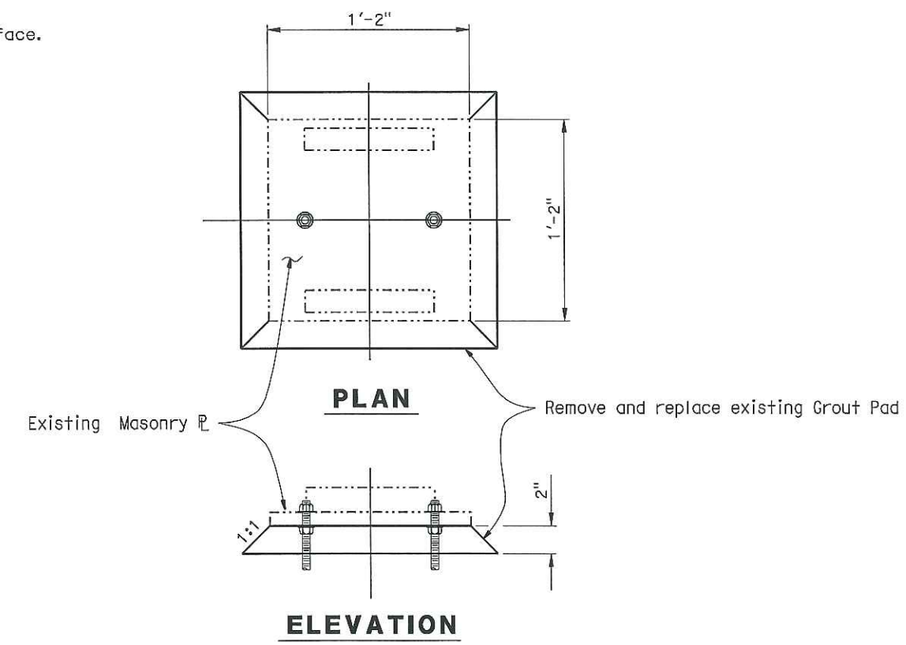

GROUT PAD DETAIL

3" = 1'-0"

DESIGN	BY Heidi Kuntz	CHECKED A. Frank	
DETAILS	BY David Kish	CHECKED A. Frank	
QUANTITIES	BY Heidi Kuntz	CHECKED A. Frank	

STATE OF CALIFORNIA DEPARTMENT OF TRANSPORTATION

DIVISION OF MAINTENANCE STRUCTURE MAINTENANCE DESIGN

BRIDGE NO. 29-0145
POST MILE 32.57

WOODBRIDGE ROAD OVERCROSSING-HEAT STRAIGHTEN

REPAIR DETAILS NO.1

STRUCTURES MAINTENANCE DETAIL SHEET (ENGLISH) (REV. 09-01-10)

ORIGINAL SCALE IN INCHES FOR REDUCED PLANS 0 1 2 3

UNIT: 3488
PROJECT NUMBER & PHASE: 1000020472
CONTRACT NO.: 10-0V5601

DISREGARD PRINTS BEARING EARLIER REVISION DATES → REVISION DATES 4-14-11 4-18-11 5-18-11

SHEET 2 OF 4

FILE => 10-0v5601_02det.dgn

USERNAME => s121614 DATE PLOTTED => 14-DEC-2011 TIME PLOTTED => 13:58

DIST	COUNTY	ROUTE	POST MILES TOTAL PROJECT	SHEET No.	TOTAL SHEETS
10	SJ	99	32.6	14	15

Heidi Kuntz 9-22-11
REGISTERED CIVIL ENGINEER DATE

12-12-11
PLANS APPROVAL DATE

REGISTERED PROFESSIONAL ENGINEER Heidi Kuntz No. C62489 Exp. 9-30-13 CIVIL STATE OF CALIFORNIA

The State of California or its officers or agents shall not be responsible for the accuracy or completeness of electronic copies of this plan sheet.

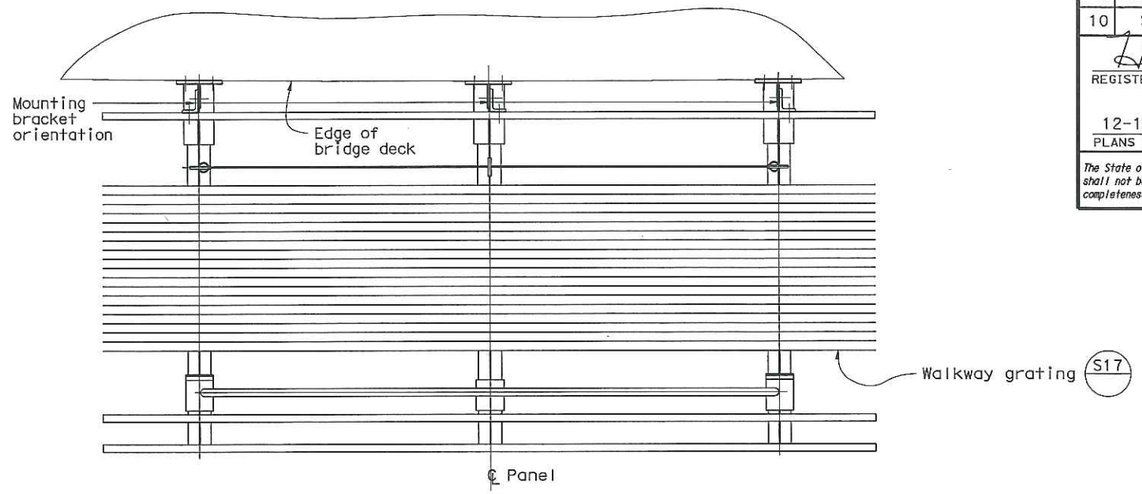

PLAN VIEW

SCALE ¾"= 1'

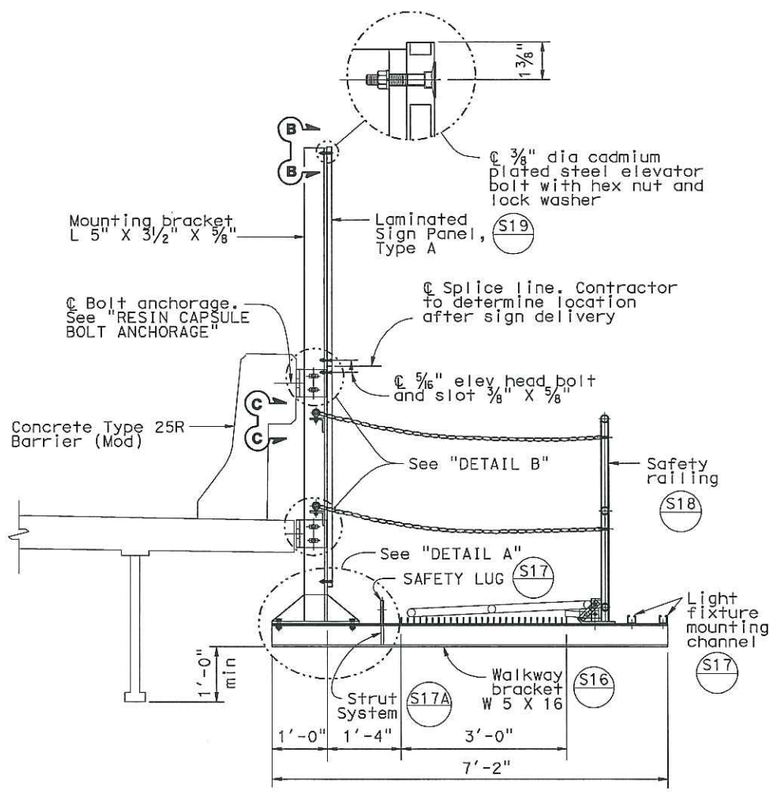

TYPICAL SECTION

SCALE ¾"= 1'

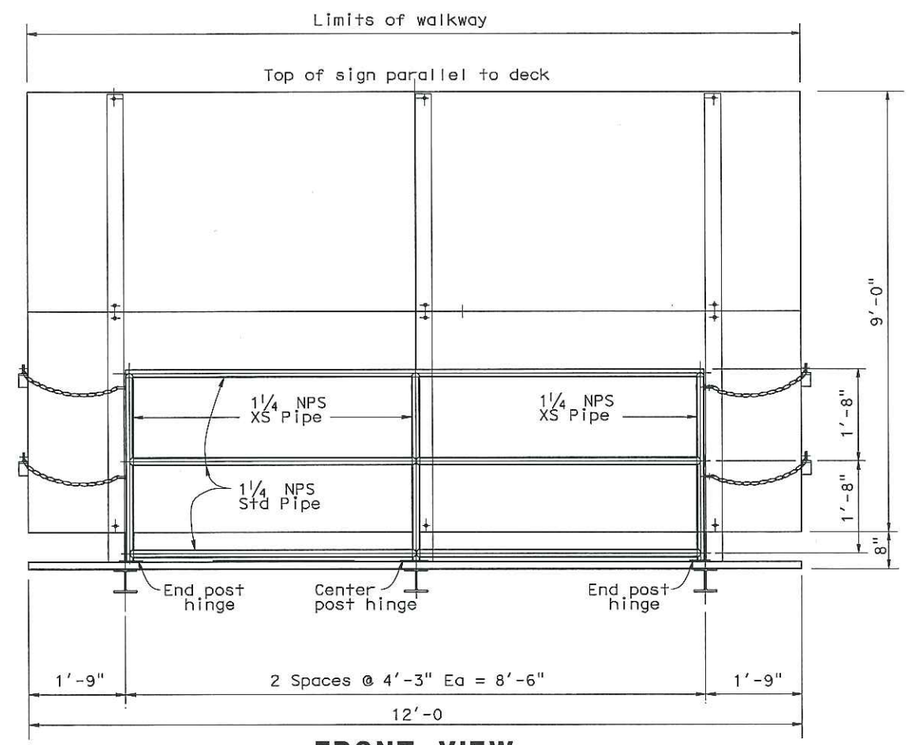

FRONT VIEW

SCALE ¾"= 1'
(Note: Strut system not shown)

NOTES:

1. For details not shown, see 2006 "STANDARD PLANS".
2. All high strength (HS) bolts shall be snug tightened.
3. Min size fillet weld is ¼" or thickness of thinner part unless noted otherwise.
4. Exterior mounting bracket to face outward to accommodate walkway chain angle.
5. For "DETAIL A", "DETAIL B", "SECTION B-B", and "SECTION C-C" see "BRIDGE MOUNTED SIGN DETAILS No. 2" sheet.
6. All steel shall be galvanized after fabrication.
7. For sign location, see "GENERAL PLAN" sheet.

STANDARD PLAN SHEET NO.
DETAIL NO.

	BY	CHECKED
DESIGN	Heidi Kuntz	A. Frank
DETAILS	David Kish	A. Frank
QUANTITIES	Heidi Kuntz	A. Frank

STATE OF CALIFORNIA
DEPARTMENT OF TRANSPORTATION

DIVISION OF MAINTENANCE
STRUCTURE MAINTENANCE DESIGN

BRIDGE NO. 29-0145
POST MILE 32.57

WOODBRIDGE ROAD OVERCROSSING-HEAT STRAIGHTEN
BRIDGE MOUNTED SIGN DETAILS NO.1

STRUCTURES MAINTENANCE DETAIL SHEET (ENGLISH) (REV. 09-01-10)

ORIGINAL SCALE IN INCHES FOR REDUCED PLANS 0 1 2 3

UNIT: 3488
PROJECT NUMBER & PHASE: 1000020472
CONTRACT NO.: 10-0V5601

DISREGARD PRINTS BEARING EARLIER REVISION DATES → REVISION DATES 4-12-11 4-14-11 4-29-11

SHEET 3 OF 4

FILE => 10-0v5601_03det.dgn

USERNAME => s121614 DATE PLOTTED => 14-DEC-2011 TIME PLOTTED => 13:58

DIST	COUNTY	ROUTE	POST MILES TOTAL PROJECT	SHEET No.	TOTAL SHEETS
10	SJ	99	32.6	15	15

Heidi Kuntz 9-22-11
REGISTERED CIVIL ENGINEER DATE

12-12-11
PLANS APPROVAL DATE

REGISTERED PROFESSIONAL ENGINEER Heidi Kuntz No. C62489 Exp. 9-30-13 CIVIL STATE OF CALIFORNIA

The State of California or its officers or agents shall not be responsible for the accuracy or completeness of electronic copies of this plan sheet.

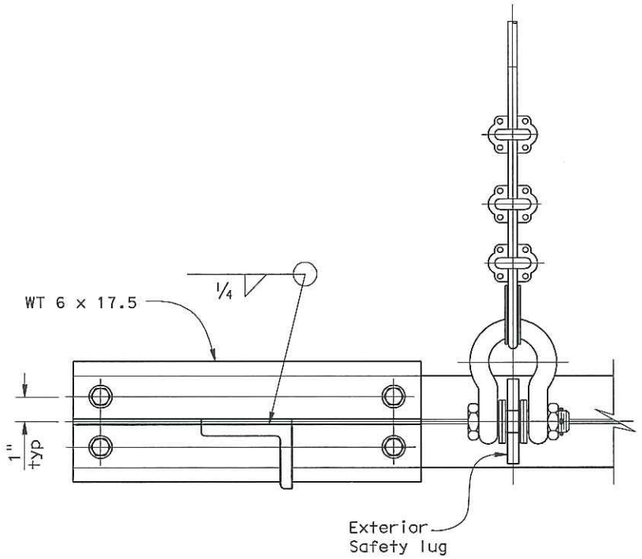

SECTION A-A
Scale 3"=1'

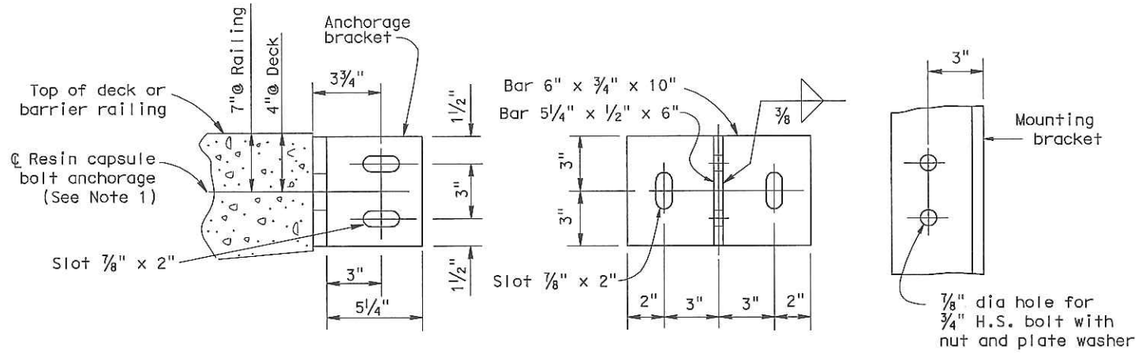

DETAIL B
Scale 3" = 1'

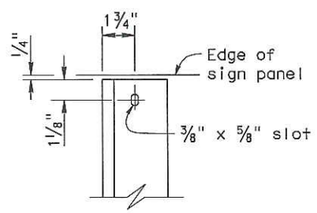

SECTION B-B
Scale 3" = 1'

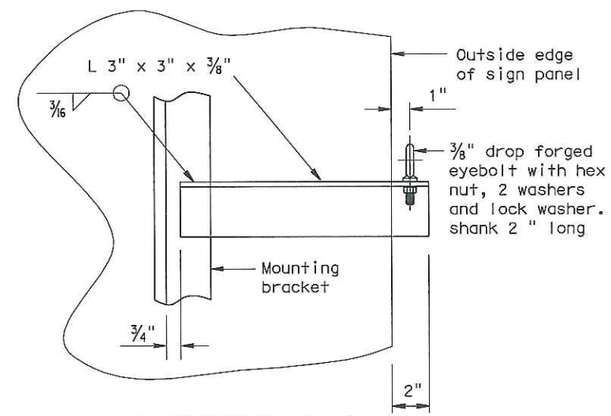

SECTION C-C
Scale 3" = 1'

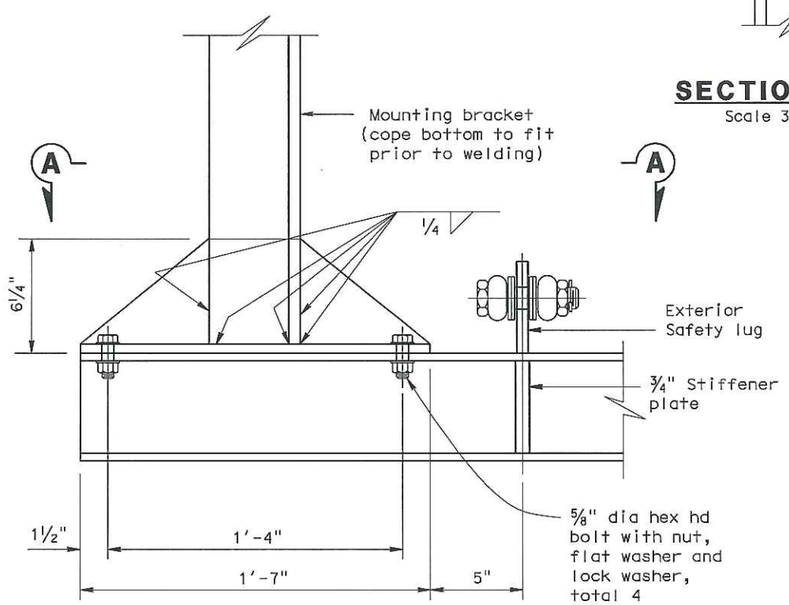

DETAIL A
Scale 3"=1'

NOTES:

1. Contractor to provide anchor bolt layout before anchor bolts are placed. Resin capsule bolt locations to be a minimum of 9" upstation from existing bolts and shall be approved by the Engineer.
2. Resin capsule anchorage is subject to approval of engineer. Installation procedure shall comply with manufacturer's instructions.
3. Resin capsule bolt anchors shall be installed in sound concrete free of cracks or delamination.

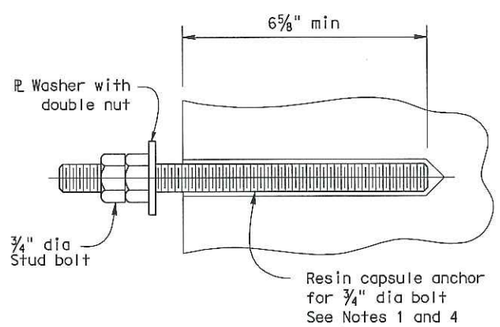

RESIN CAPSULE BOLT ANCHORAGE
Scale 6"=1'

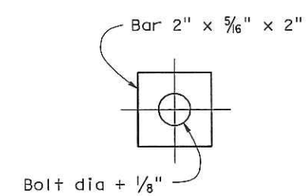

PLATE WASHER
Scale 6"=1'
FOR ALL SLOTTED HOLES

DESIGN	BY Heidi Kuntz	CHECKED A. Frank	
DETAILS	BY David Kish	CHECKED A. Frank	
QUANTITIES	BY Heidi Kuntz	CHECKED A. Frank	

STATE OF CALIFORNIA
DEPARTMENT OF TRANSPORTATION

DIVISION OF MAINTENANCE
STRUCTURE MAINTENANCE DESIGN

BRIDGE NO. 29-0145
POST MILE 32.57

WOODBRIDGE ROAD OVERCROSSING-HEAT STRAIGHTEN
BRIDGE MOUNTED SIGN DETAILS NO.2

STRUCTURES MAINTENANCE DETAIL SHEET (ENGLISH) (REV. 09-01-10)

ORIGINAL SCALE IN INCHES FOR REDUCED PLANS 0 1 2 3

UNIT: 3488
PROJECT NUMBER & PHASE: 1000020472
CONTRACT NO.: 10-0V5601

DISREGARD PRINTS BEARING EARLIER REVISION DATES 4-12-11 4-14-11

SHEET 4 OF 4

FILE => 10-0v5601_04det.dgn

USERNAME => s121614 DATE PLOTTED => 14-DEC-2011 TIME PLOTTED => 13:58