PS-1201629

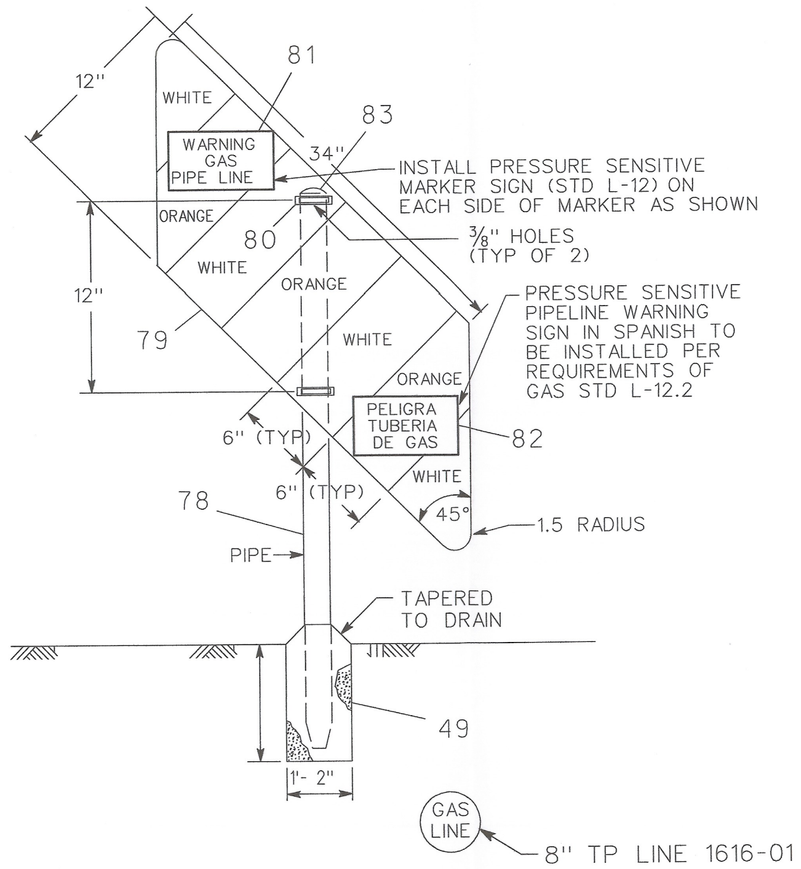

LINE MARKER			
LOCATION		LINE/DFM	SHEET
H STA 01+34.54	1 PADDLE	1616-01	3
H STA 02+03.07	2 PADDLE	1616-04	3
H STA 02+61.41	2 PADDLE	1616-01	3

DETAIL 10/3 G.S. L-10 PIPELINE MARKER
NOT TO SCALE

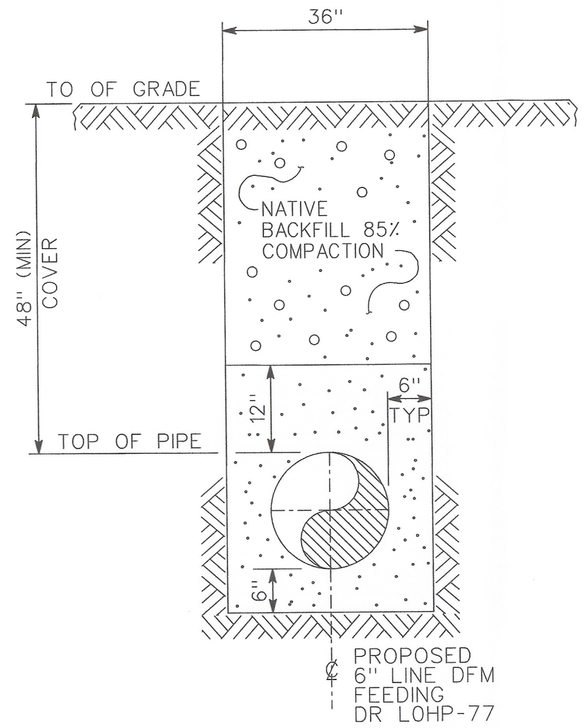

TYP TRENCH
NON PAVED AREA

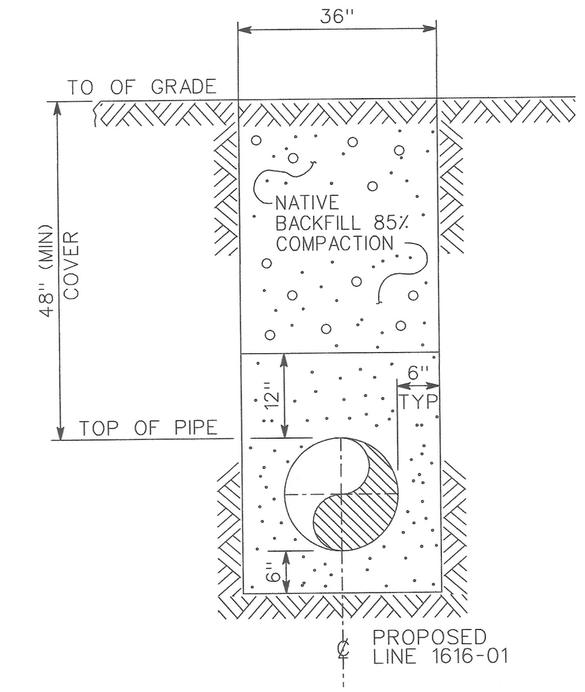

TYP TRENCH
NON PAVED AREA

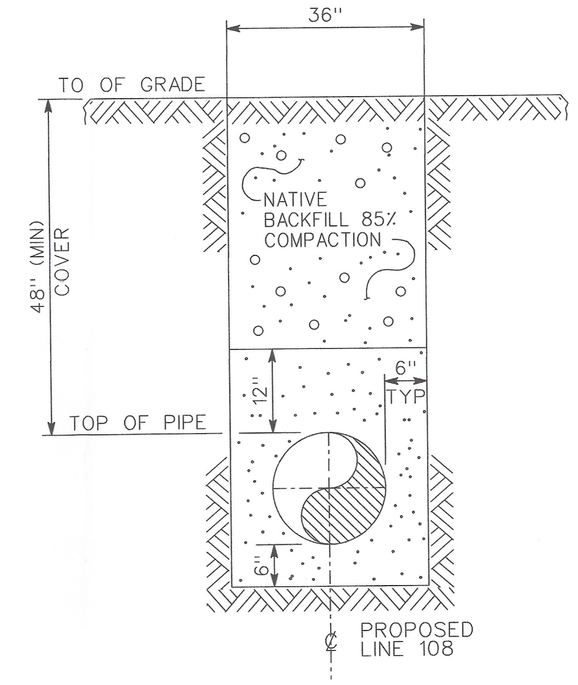

TYP TRENCH
NON PAVED AREA

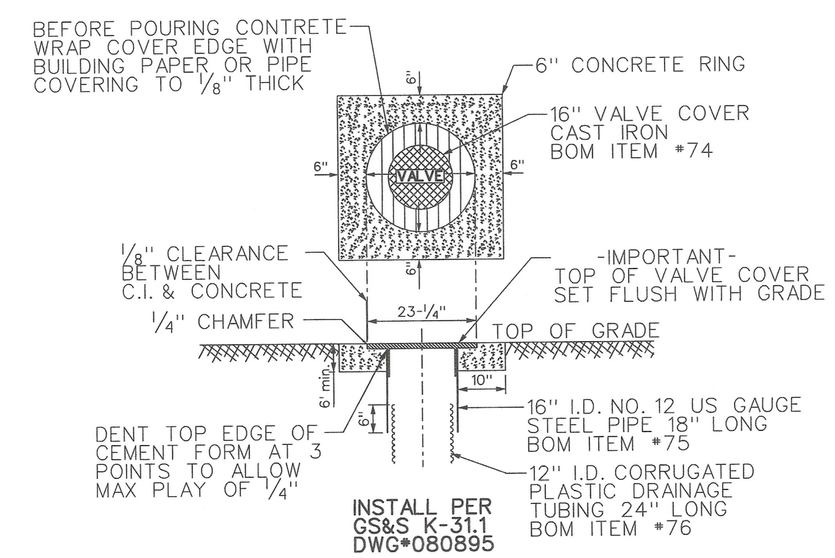

16" FRAME AND COVER DETAIL

DETAIL 6/4
SCALE: 1/2"=1'

TYPICAL WELD DETAIL
PIPE TO PIPE

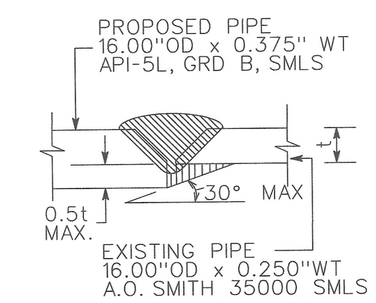

DETAIL 12/4 G.S. D-22
NOT TO SCALE

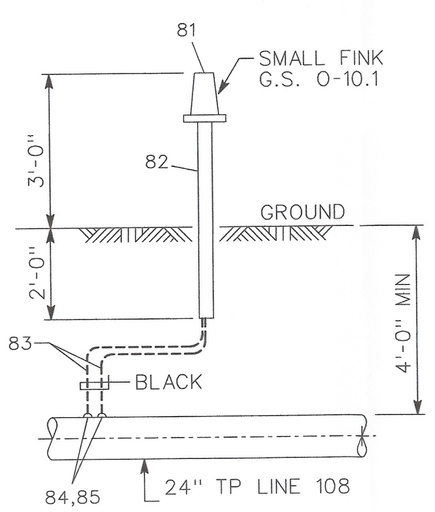

ETS MARKER			
LOCATION		LINE/DFM	SHEET
NEAR V-1	LITTLE FINK	L-108	4

DETAIL 11/3 SMALL FINK INSTALL TYPE "A" ETS PER GAS STD 0-10.1
NOT TO SCALE

SAFETY

SAFETY PLEDGE

I ALWAYS PUT SAFETY FIRST.
I LOOK FOR AND ACT TO RESOLVE UNSAFE SITUATIONS.
I HELP AND ENCOURAGE OTHERS TO ACT SAFELY.

REGISTERED PROFESSIONAL ENGINEER
GEORGE TASSO KARKALIS
No. M27357
EXP.
MECHANICAL
STATE OF CALIFORNIA

PSRS# 27156

NO.	DATE	DESCRIPTION	GM/SPEC	DWN	CHKD	SUPV	APVD BY
0	- -	ISSUE FOR CONSTRUCTION	30919862	D5BZ	SEW6		

REVISIONS

APPROVED BY	
JN	30919862
SUPV	
DSGN	D. BREWER
DWN	D BREWER
CHKD	S. WATERS
OK	
DATE	05/30/12
SCALES	AS SHOWN

PIPING - SECTIONS & DETAILS
INSTALL MLV 38.17 AND BRIDLE SET ON L-108 AND 385' OF 8" PIPE TO DFM 1616-01.
LODI, SAN JOAQUIN COUNTY
PACIFIC GAS AND ELECTRIC COMPANY
WALNUT CREEK , CALIFORNIA

MICROFILM
BILL OF MATL SHT 10
DWG LIST
SUPSDS
SUPSD BY
SHEET NO. 9 OF 10 SHEETS
30919862 0

30919862-FINAL.dgn 7/11/2012 3:06:05 PM