PS-1201629

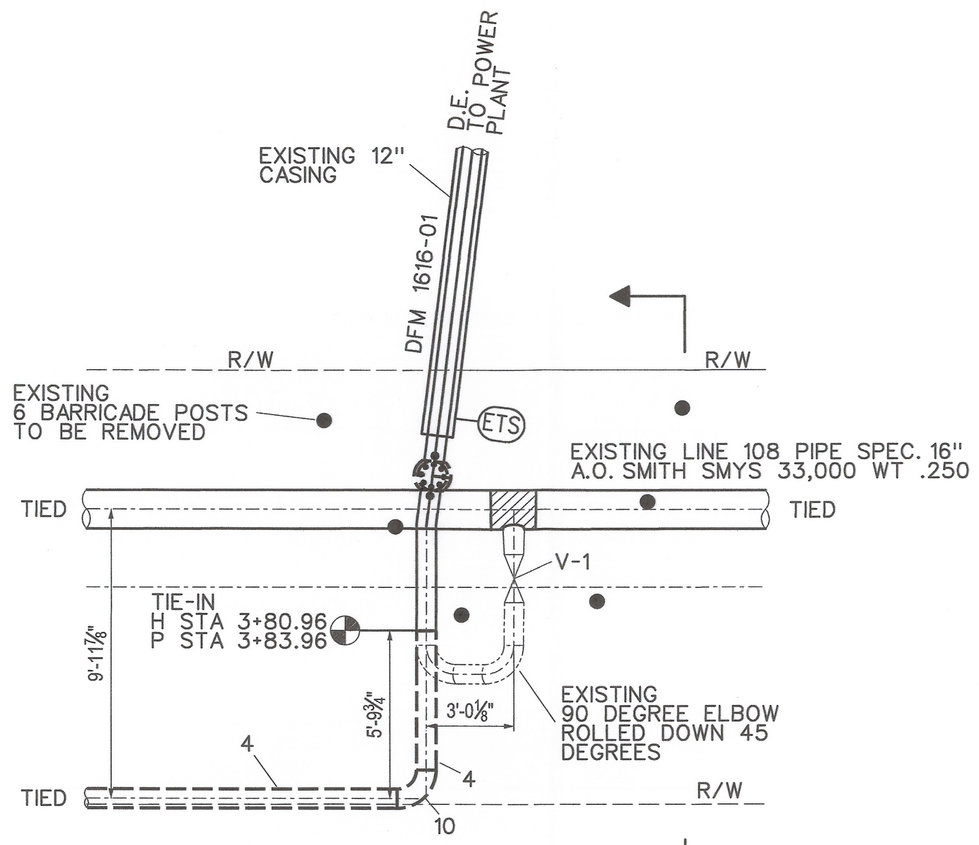

DETAIL 2 / 3
SCALE: 3/8" = 1'

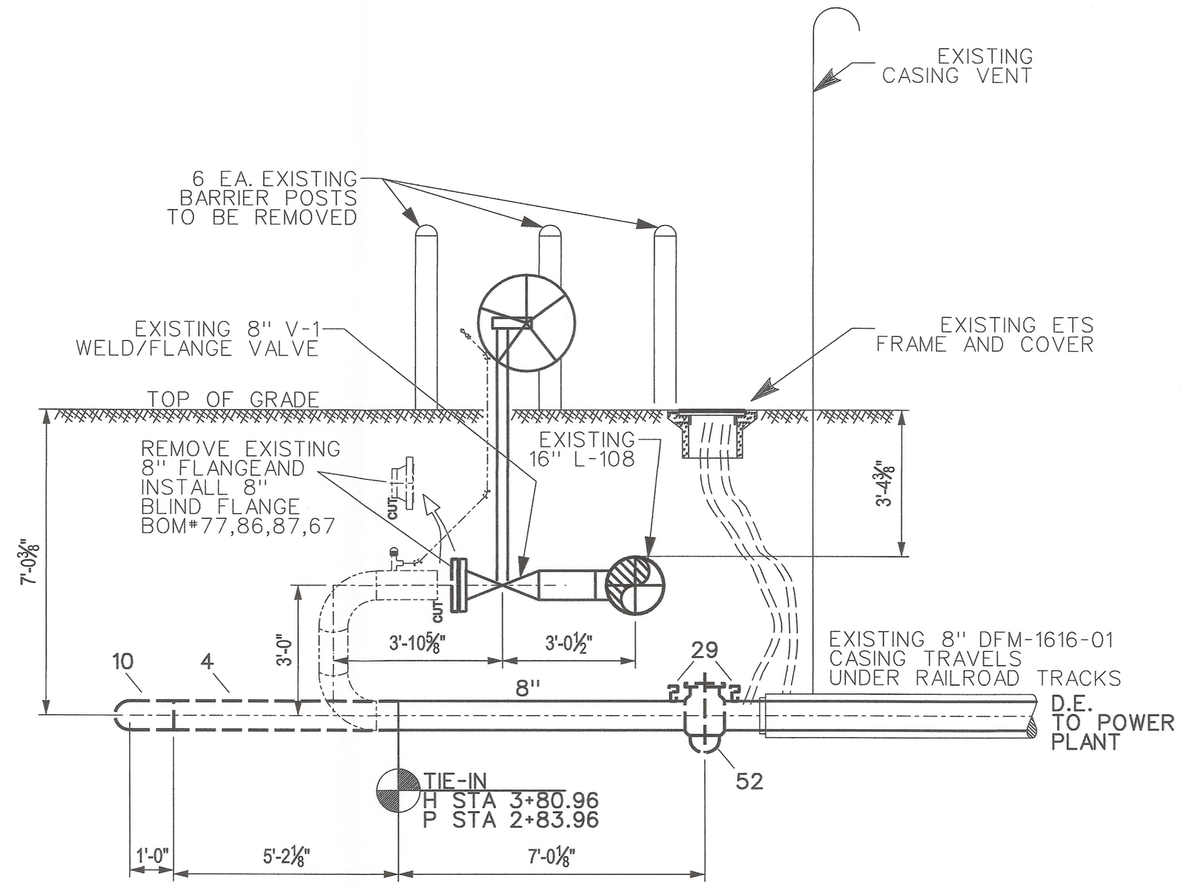

ELEVATION G / ~
SCALE: 3/8" = 1'

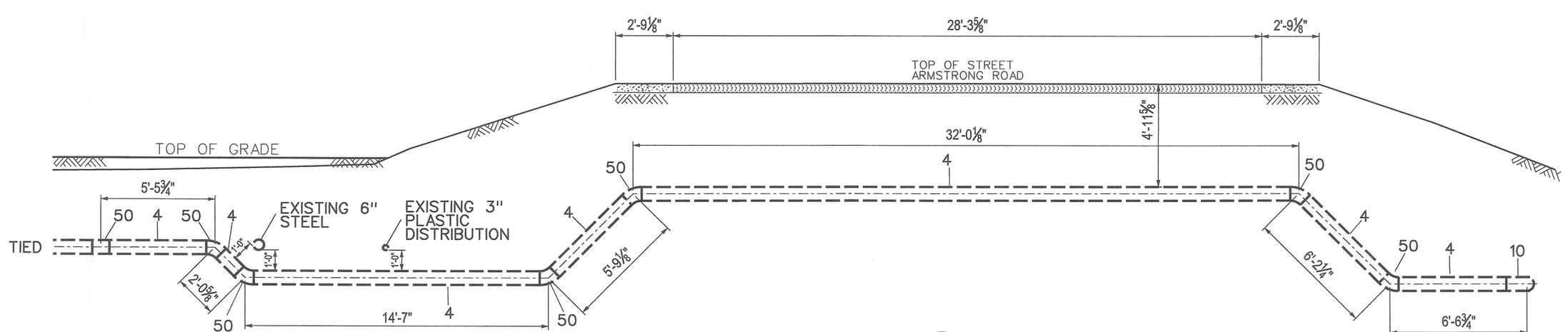

DETAIL 7 / 3
SCALE: 1/4" = 1'

WELDING INSPECTED PER PG&E GAS STANDARD D-40

VISUAL _____ ☐
MAGNETIC PARTICLE _____ ☐

INSPECTOR _____
DATE _____

CIRCLE OF SAFETY

SAFETY PLEDGE

I ALWAYS PUT SAFETY FIRST.
I LOOK FOR AND ACT TO
RESOLVE UNSAFE SITUATIONS.
I HELP AND ENCOURAGE
OTHERS TO ACT SAFELY.

REGISTERED PROFESSIONAL ENGINEER
GEORGE TASSO KARKAZIS
No. M27357
EXP.
MECHANICAL
STATE OF CALIFORNIA

STPR TEST #2
8" LINE DFM 1616-01

JOB NO. 30919862
B/M ITEM NO. 4
DESIGN CRITERIA
LOCATION CLASS 3
DESIGN FACTOR 0.5
FDP 720 PSIG 27.55 % SMYS
MAOP 720 PSIG 27.55 % SMYS
STRENGTH TEST PRESSURE
MAX. 1280 PSIG 48.98 % SMYS
MIN. 1080 PSIG 41.33 % SMYS
2352 PSIG=90% SMYS
TEST MEDIUM WATER
PIPE SPEC API 5L GR B SMLS
O.D. 8.625"
W.T. 0.322"
WELD INSPECTION (GAS STD.D-40)*
☐RADIOGRAPHIC:
☐20% MIN. (% OF EACH WELDER'S DAILY WORK)
☐100%
*VISUALLY INSPECT 100% OF ALL WELDS THAT ARE NOT RADIOGRAPHICALLY INSPECTED. (THIS REQUIREMENT APPLIES EVEN IF NO RADIOGRAPHIC INSPECTION IS REQUIRED.)

INSTALLED ON GM:38100 YR:1930	INSTALLED ON GM:4946646 YR:1994
EXIST PIPE SPECS	EXIST PIPE SPECS
HEADER SIZE: 16.000"	HEADER SIZE: 8.625"
PIPE SPECS: A.O. SMITH	PIPE SPECS: API 5L, GR-X42, ERW
WALL THICKNESS: 0.250	WALL THICKNESS: 0.188"
PRESENT MAOP: 412 (GIS)	PRESENT MAOP: 720 ASBUILT DWG
% SMYS @ MAOP: 39.95	% SMYS @ MAOP: 39.32
MAXIMUM ALLOWABLE PRESSURE DURING WELDING (G.S.&S. D-22)	MAXIMUM ALLOWABLE PRESSURE DURING WELDING (G.S.&S. D-22)
EVALUATE THE FOLLOWING OPERATING PRESSURE LIMITATIONS TO DETERMINE THE MAXIMUM OPERATING PRESSURE PERMITTED DURING WELDING	EVALUATE THE FOLLOWING OPERATING PRESSURE LIMITATIONS TO DETERMINE THE MAXIMUM OPERATING PRESSURE PERMITTED DURING WELDING
A) (PSIG) WHEN WELDING ON BODY OF THE PIPE. UNLESS,	A) (PSIG) WHEN WELDING ON BODY OF THE PIPE. UNLESS,
B) (PSIG) WHEN WELDING WITHIN 3" OF THE LONGITUDINAL SEAM (EXCEPT DSAW PIPE), THE CIRCUMFERENTIAL, AND ANY BRANCH WELD, OR WITHIN 3" OF ANY DEFECT (GOUGES, CORROSION, LAMINATIONS, ETC.) IN THE PIPE WHICH EXCEEDS 1/3 OF THE NOMINAL WALL THICKNESS IN DEPTH AND/OR 1/4 OF THE NOMINAL PIPE DIAMETER IN LENGTH.	B) (PSIG) WHEN WELDING WITHIN 3" OF THE LONGITUDINAL SEAM (EXCEPT DSAW PIPE), THE CIRCUMFERENTIAL, AND ANY BRANCH WELD, OR WITHIN 3" OF ANY DEFECT (GOUGES, CORROSION, LAMINATIONS, ETC.) IN THE PIPE WHICH EXCEEDS 1/3 OF THE NOMINAL WALL THICKNESS IN DEPTH AND/OR 1/4 OF THE NOMINAL PIPE DIAMETER IN LENGTH.

NTS08

PSRS# 27156

NO.	DATE	DESCRIPTION	GM/SPEC	DWN	CHKD	SUPV	APVD	BY
0	- -	ISSUE FOR CONSTRUCTION	30919862	D5BZ	SEW6			

REVISIONS

APPROVED BY	
JN	30919862
SUPV	
DSGN	D. BREWER
DWN	D. BREWER
CHKD	S. WATERS
OK	
DATE	05/30/12
SCALES	AS SHOWN

PIPING - SECTIONS & DETAILS
INSTALL MLV 38.17 AND BRIDLE SET ON L-108 AND 385' OF 8" PIPE TO DFM 1616-01.
LODI, SAN JOAQUIN COUNTY
PACIFIC GAS AND ELECTRIC COMPANY
WALNUT CREEK , CALIFORNIA

MICROFILM
BILL OF MATL SHT 10
DWG LIST
SUPSDS
SUPSD BY
SHEET NO. 5 OF 10 SHEETS
30919862 0

30919862-FINAL.dgn 7/11/2012 3:13:30 PM