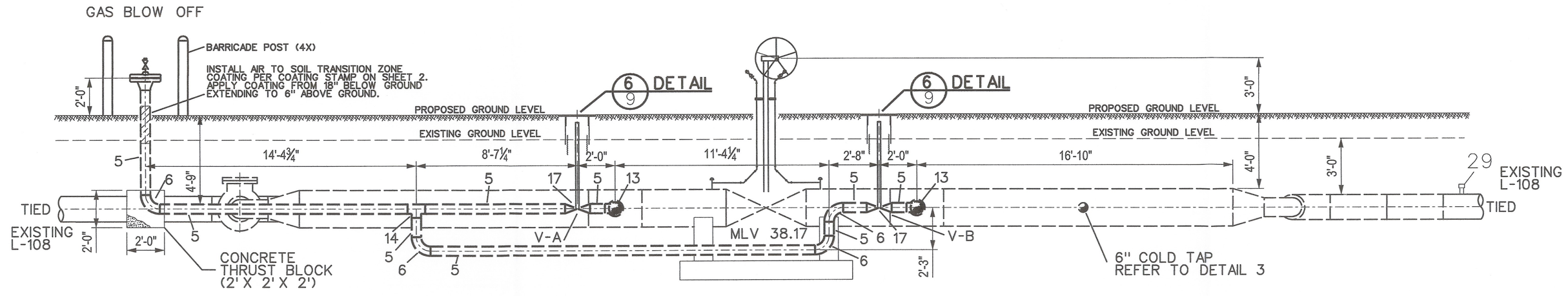

ELEVATION D
SCALE: 3/16"=1'

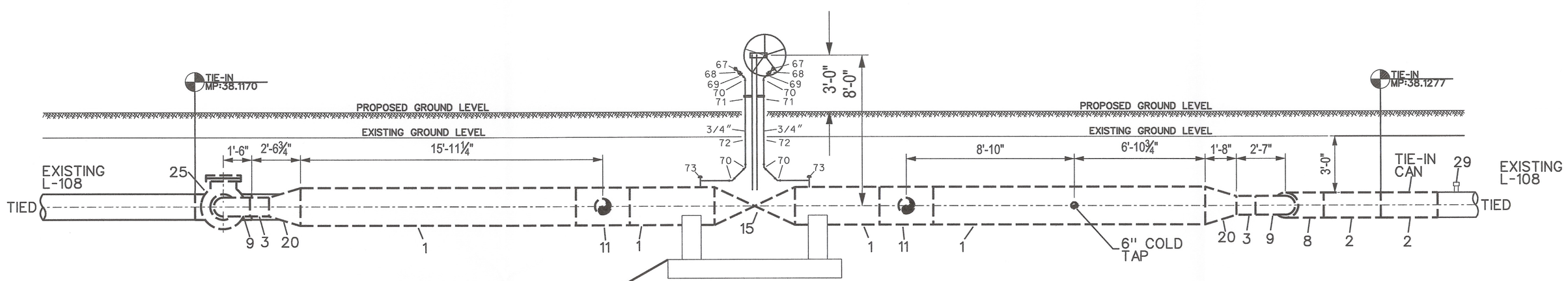

DETAIL 7
SCALE: 1/4"=1'

ELEVATION E
SCALE: 3/16"=1'

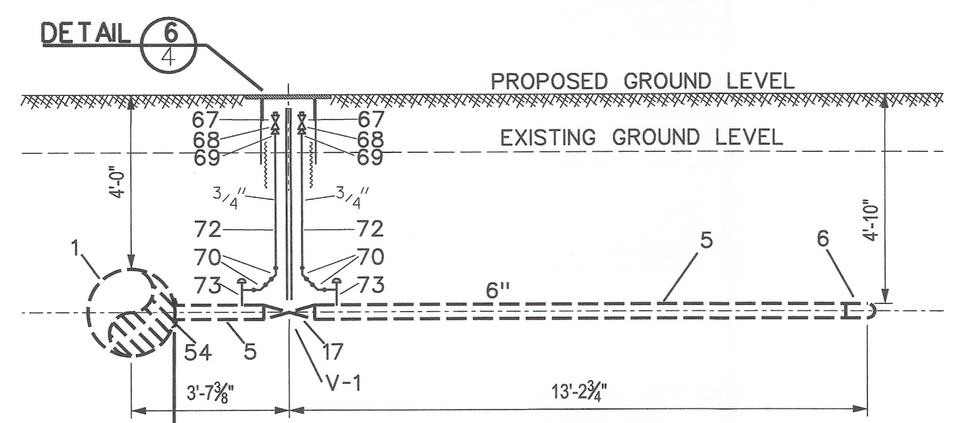

ELEVATION F
SCALE: 3/8"=1'

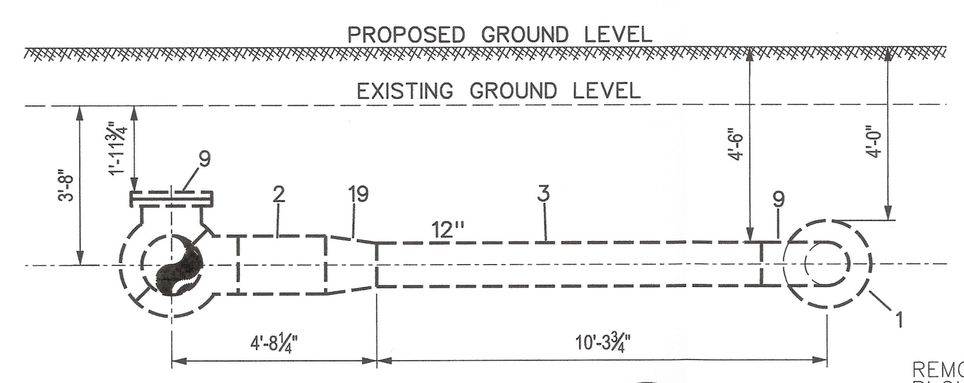

ELEVATION A
SCALE: 3/8"=1'

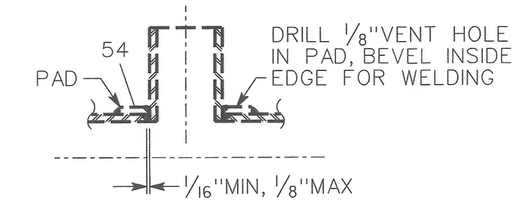

DETAIL 3 COLD TAP G.S. A-50
SCALE: 1-½"=1'

INSTALLED ON GM:38100 YR:1930

EXIST PIPE SPECS
HEADER SIZE: 16.000"
PIPE SPECS: A.O. SMITH
WALL THICKNESS: 0.250
PRESENT MAOP: 412 (GIS)
% SMYS @ MAOP: 39.95
MAXIMUM ALLOWABLE PRESSURE DURING WELDING (G.S.&S. D-22)

EVALUATE THE FOLLOWING OPERATING PRESSURE LIMITATIONS TO DETERMINE THE MAXIMUM OPERATING PRESSURE PERMITTED DURING WELDING

A) (PSIG) WHEN WELDING ON BODY OF THE PIPE. UNLESS,

B) (PSIG) WHEN WELDING WITHIN 3" OF THE LONGITUDINAL SEAM (EXCEPT DSAW PIPE),THE CIRCUMFERENTIAL, AND ANY BRANCH WELD, OR WITHIN 3" OF ANY DEFECT (GOUGES, CORROSION, LAMINATIONS, ETC.) IN THE PIPE WHICH EXCEEDS 1/3 OF THE NOMINAL WALL THICKNESS IN DEPTH AND/OR 1/4 OF THE NOMINAL PIPE DIAMETER IN LENGTH.

PS-120/629

MANUALLY OPERATED VALVE DATA STAMP
BOM* 15
TECH ID (VALVE *) MLV 38.17
VALVE TYPE 24" BALL
MANUFACTURE
MODEL *
SERIAL*

COMMISSIONING
VALVE TO BE COMMISSIONED BY GAS T&R OR DISTRICT PRIOR TO ANYTHING BEING WELDED OR BOLTED TO THE VALVE ASSEMBLY
COMMISSIONED BY
DATE
NUMBER OF TURNS

MANUALLY OPERATED VALVE DATA STAMP
BOM* 17
TECH ID (VALVE *) 1
VALVE TYPE 6" BALL
MANUFACTURE
MODEL *
SERIAL*

COMMISSIONING
VALVE TO BE COMMISSIONED BY GAS T&R OR DISTRICT PRIOR TO ANYTHING BEING WELDED OR BOLTED TO THE VALVE ASSEMBLY
COMMISSIONED BY
DATE
NUMBER OF TURNS

MANUALLY OPERATED VALVE DATA STAMP
BOM* 17
TECH ID (VALVE *) A
VALVE TYPE 6" BALL
MANUFACTURE
MODEL *
SERIAL*

COMMISSIONING
VALVE TO BE COMMISSIONED BY GAS T&R OR DISTRICT PRIOR TO ANYTHING BEING WELDED OR BOLTED TO THE VALVE ASSEMBLY
COMMISSIONED BY
DATE
NUMBER OF TURNS

MANUALLY OPERATED VALVE DATA STAMP
BOM* 17
TECH ID (VALVE *) B
VALVE TYPE 6" BALL
MANUFACTURE
MODEL *
SERIAL*

COMMISSIONING
VALVE TO BE COMMISSIONED BY GAS T&R OR DISTRICT PRIOR TO ANYTHING BEING WELDED OR BOLTED TO THE VALVE ASSEMBLY
COMMISSIONED BY
DATE
NUMBER OF TURNS

WELDING INSPECTED PER PG&E GAS STANDARD D-40
VISUAL ☐
MAGNETIC PARTICLE ☐
INSPECTOR
DATE

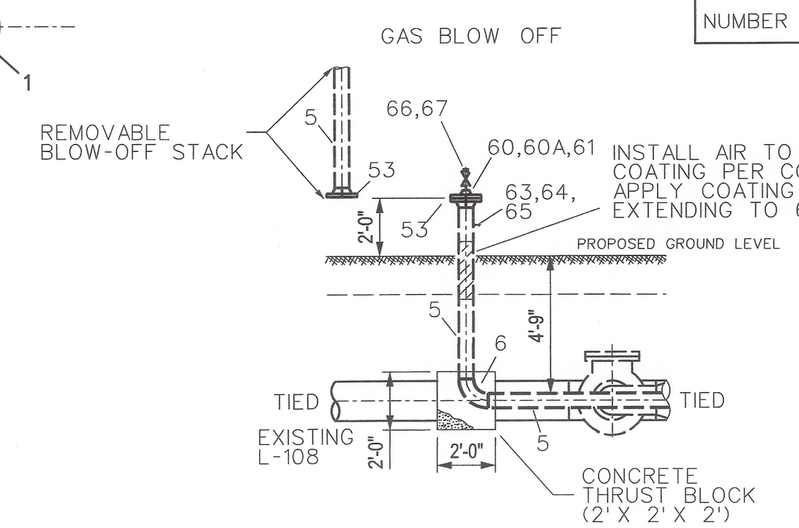

DETAIL 9
SCALE: 3/16"=1'

STPR TEST #1 MAIN LINE VALVE CHECK VALVE

JOB NO. 30919862
B/M ITEM NO. 1
DESIGN CRITERIA
LOCATION CLASS 3
DESIGN FACTOR 0.5
FDP 720 PSIG 38.40 % SMYS
MAOP 720 PSIG 38.40 % SMYS
STRENGTH TEST PRESSURE
MAX. 1125 PSIG 60.00 % SMYS
MIN. 1080 PSIG 57.60 % SMYS
1687 PSIG•90% SMYS
TEST MEDIUM WATER
PIPE SPEC API 5L X-60 SAWL
O.D. 24.000"
W.T. 0.375"
WELD INSPECTION (GAS STD.D-40)*
☐RADIOGRAPHIC:
☐20% MIN. (% OF EACH WELDER'S DAILY WORK)
☐100%
*VISUALLY INSPECT 100% OF ALL WELDS THAT ARE NOT RADIOGRAPHICALLY INSPECTED. (THIS REQUIREMENT APPLIES EVEN IF NO RADIOGRAPHIC INSPECTION IS REQUIRED.)

JOB NO. 30919862
B/M ITEM NO. 2
DESIGN CRITERIA
LOCATION CLASS 3
DESIGN FACTOR 0.5
FDP 720 PSIG 43.89 % SMYS
MAOP 720 PSIG 43.89 % SMYS
STRENGTH TEST PRESSURE
MAX. 1125 PSIG 68.57 % SMYS
MIN. 1080 PSIG 65.83 % SMYS
1476 PSIG•90% SMYS
TEST MEDIUM WATER
PIPE SPEC API 5L GR B SMLS
O.D. 16.000"
W.T. 0.375"
WELD INSPECTION (GAS STD.D-40)*
☐RADIOGRAPHIC:
☐20% MIN. (% OF EACH WELDER'S DAILY WORK)
☐100%
*VISUALLY INSPECT 100% OF ALL WELDS THAT ARE NOT RADIOGRAPHICALLY INSPECTED. (THIS REQUIREMENT APPLIES EVEN IF NO RADIOGRAPHIC INSPECTION IS REQUIRED.)

JOB NO. 30919862
B/M ITEM NO. 3
DESIGN CRITERIA
LOCATION CLASS 3
DESIGN FACTOR 0.5
FDP 720 PSIG 34.97 % SMYS
MAOP 720 PSIG 34.97 % SMYS
STRENGTH TEST PRESSURE
MAX. 1125 PSIG 54.64 % SMYS
MIN. 1080 PSIG 52.46 % SMYS
1852 PSIG•90% SMYS
TEST MEDIUM WATER
PIPE SPEC API 5L GR B SMLS
O.D. 12.750"
W.T. 0.375"
WELD INSPECTION (GAS STD.D-40)*
☐RADIOGRAPHIC:
☐20% MIN. (% OF EACH WELDER'S DAILY WORK)
☐100%
*VISUALLY INSPECT 100% OF ALL WELDS THAT ARE NOT RADIOGRAPHICALLY INSPECTED. (THIS REQUIREMENT APPLIES EVEN IF NO RADIOGRAPHIC INSPECTION IS REQUIRED.)

JOB NO. 30919862
B/M ITEM NO. 5
DESIGN CRITERIA
LOCATION CLASS 3
DESIGN FACTOR 0.5
FDP 720 PSIG 24.34 % SMYS
MAOP 720 PSIG 24.34 % SMYS
STRENGTH TEST PRESSURE
MAX. 1125 PSIG 38.03 % SMYS
MIN. 1080 PSIG 36.51 % SMYS
2662 PSIG•90% SMYS
TEST MEDIUM WATER
PIPE SPEC API 5L GR B SMLS
O.D. 6.625"
W.T. 0.280"
WELD INSPECTION (GAS STD.D-40)*
☐RADIOGRAPHIC:
☐20% MIN. (% OF EACH WELDER'S DAILY WORK)
☐100%
*VISUALLY INSPECT 100% OF ALL WELDS THAT ARE NOT RADIOGRAPHICALLY INSPECTED. (THIS REQUIREMENT APPLIES EVEN IF NO RADIOGRAPHIC INSPECTION IS REQUIRED.)

STPR TEST #3 6" DIST. TAP FOR DR LOHP-77

JOB NO. 30919862
B/M ITEM NO. 5
DESIGN CRITERIA
LOCATION CLASS 3
DESIGN FACTOR 0.5
FDP 720 PSIG 24.34 % SMYS
MAOP 720 PSIG 24.34 % SMYS
STRENGTH TEST PRESSURE
MAX. 1280 PSIG 43.27 % SMYS
MIN. 1080 PSIG 36.51 % SMYS
2662 PSIG•90% SMYS
TEST MEDIUM WATER
PIPE SPEC API 5L GR B SMLS
O.D. 6.625"
W.T. 0.280"
WELD INSPECTION (GAS STD.D-40)*
☐RADIOGRAPHIC:
☐20% MIN. (% OF EACH WELDER'S DAILY WORK)
☐100%
*VISUALLY INSPECT 100% OF ALL WELDS THAT ARE NOT RADIOGRAPHICALLY INSPECTED. (THIS REQUIREMENT APPLIES EVEN IF NO RADIOGRAPHIC INSPECTION IS REQUIRED.)

WELDING INSPECTED PER PG&E GAS STANDARD D-40
VISUAL ☐
MAGNETIC PARTICLE ☐
INSPECTOR
DATE

WELDING INSPECTED PER PG&E GAS STANDARD D-40
VISUAL ☐
MAGNETIC PARTICLE ☐
INSPECTOR
DATE

SAFETY
SAFETY PLEDGE
I ALWAYS PUT SAFETY FIRST.
I LOOK FOR AND ACT TO RESOLVE UNSAFE SITUATIONS.
I HELP AND ENCOURAGE OTHERS TO ACT SAFELY.

REGISTERED PROFESSIONAL ENGINEER GEORGE TASSO KARAKAZIS No. M27357 EXP. MECHANICAL STATE OF CALIFORNIA

NO.	DATE	DESCRIPTION	GM/SPEC	DWN	CHKD	SUPV	APVD BY
0	- - -	ISSUE FOR CONSTRUCTION	30919862	DSBZ	SEW6		

REVISIONS

PSRS* 27156

APPROVED BY
JN 30919862
SUPV
DSGN D. BREWER
DWN D BREWER
CHKD S. WATERS
OK
DATE 05/30/12
SCALES AS SHOWN

PIPING - SECTIONS & DETAILS
INSTALL MLV 38.17 AND BRIDLE SET ON L-108 AND 385' OF 8" PIPE TO DFM 1616-01.
LODI, SAN JOAQUIN COUNTY
PACIFIC GAS AND ELECTRIC COMPANY
WALNUT CREEK , CALIFORNIA

MICROFILM
BILL OF MATL SHT 10
DWG LIST
SUPSDS
SUPSD BY
SHEET NO. 6 OF 10 SHEETS
30919862 0

N1808 30919862-FINAL.dgn 7/11/2012 3:13:21 PM