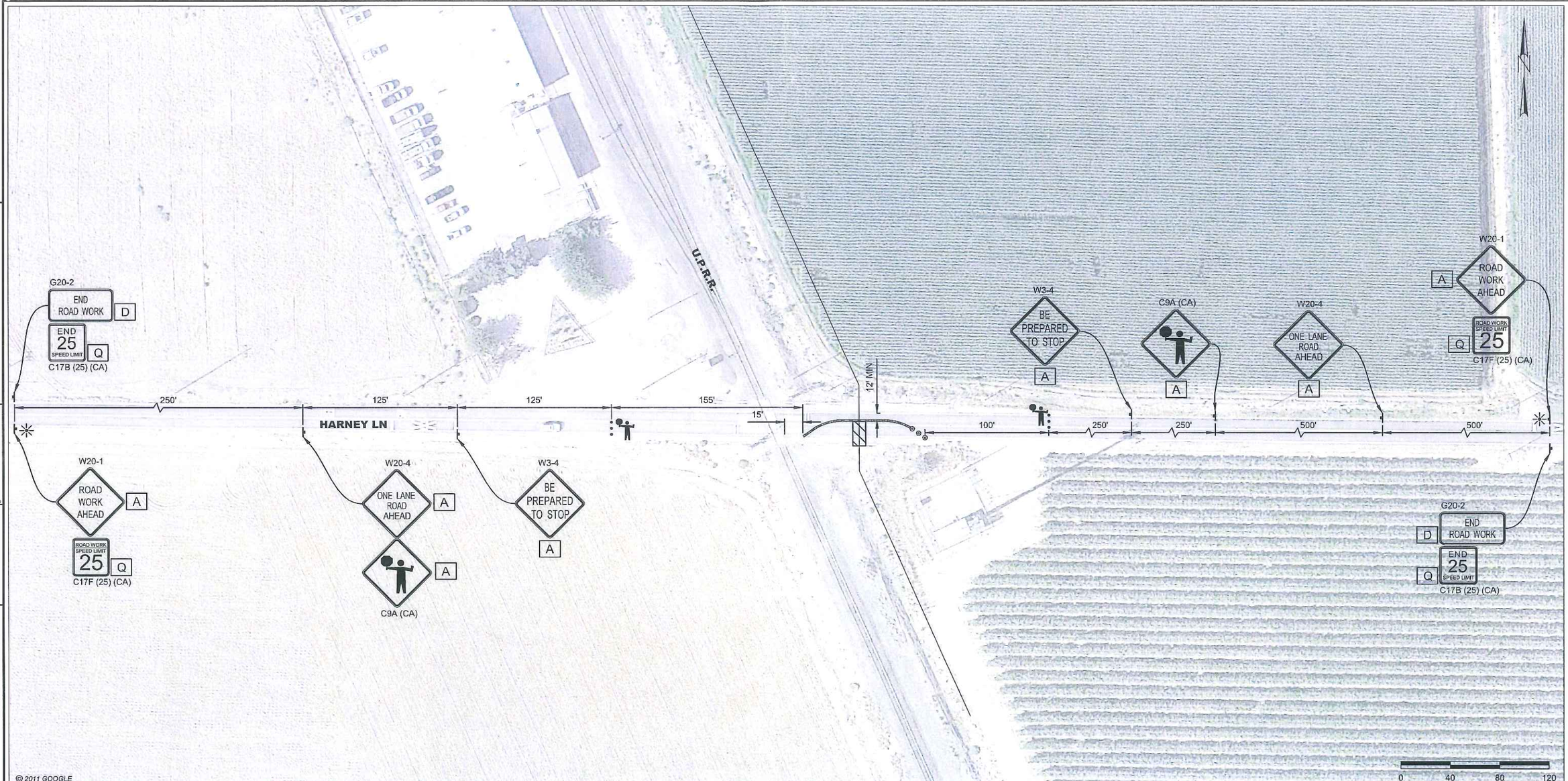

CONTRACTOR NOTES:

1. ALL TRAFFIC CONTROL DEVICES SHALL CONFORM TO THE LATEST EDITION OF CALIFORNIA MANUAL OF UNIFORM TRAFFIC CONTROL DEVICES (MUTCD) AND CALTRANS STANDARD PLANS AND SPECIFICATIONS.
2. THE LOCAL FIRE DEPARTMENT, SHERIFF/POLICE DEPARTMENT, CALIFORNIA HIGHWAY PATROL, LOCAL SCHOOL DISTRICT, TRANSIT SERVICE PROVIDERS AND UNITED STATES POSTAL SERVICE SHALL BE NOTIFIED 72 HOURS IN ADVANCE OF CONSTRUCTION WORK.
3. THE CONTRACTOR IS SOLELY RESPONSIBLE FOR THE REPAIR OF ANY DAMAGE TO EXISTING IMPROVEMENTS RESULTING FROM THE CONTRACTOR'S OPERATION. THIS REPAIR SHALL INCLUDE ALL CONSTRUCTION AND MATERIALS TO RESTORE THE SITE TO EXISTING CONDITIONS.
4. EACH ADVANCED WARNING SIGN ON EACH SIDE OF THE ROADWAY SHALL BE EQUIPPED WITH AT LEAST TWO FLAGS. FLASHING BEACONS SHALL BE PLACED AT THE LOCATION INDICATED FOR LANE CLOSURE DURING HOURS OF DARKNESS.
5. ALL WORKERS SHALL BE EQUIPPED WITH A REFLECTIVE VEST AND HARD HAT. ALL FLAGGERS SHALL ALSO BE EQUIPPED WITH A C28 "STOP/SLOW" PADDLE AND SHALL BE TRAINED IN THE PROPER FUNDAMENTALS OF FLAGGING TRAFFIC.
6. NO PARKING SIGNS SHALL BE PLACED 72 HOURS PRIOR TO SET UP. SIGNS SHALL BE POSTED EVERY 20 LINEAR FEET OF OCCUPIED SPACE WITH AT LEAST ONE SIGN AT EACH END OF OCCUPIED SPACE.
7. ANY CONFLICTING SIGNS WILL BE COVERED FOR THE LENGTH OF THE JOB.
8. CONTRACTOR SHALL MAINTAIN EMERGENCY VEHICLE AND DRIVEWAY ACCESS AT ALL TIMES.
9. Y&C TRANSPORTATION CONSULTANTS ASSUMES NO LIABILITY WHEN CONTRACTOR DOES OWN SET UP OR MAKES CHANGES TO THE ORIGINAL TRAFFIC CONTROL PLAN.
10. CITY/COUNTY ENGINEER OR HIS REPRESENTATIVE HAS THE AUTHORITY TO INITIATE FIELD CHANGES TO ASSURE PUBLIC SAFETY.
11. CONTRACTOR SHALL PROVIDE TRAFFIC CONTROL PLAN FOR CONSTRUCTION AREAS WHICH ARE NOT COVERED BY THESE TRAFFIC CONTROL PLANS.
12. CONTRACTOR SHALL FURNISH AND INSTALL WATER-FILLED BARRIER AND FENCE AROUND WORK ZONE FOR SAFETY PURPOSE.
13. WHEN WORK ZONE ENCROACHES OVER A DRIVEWAY OR CROSS ROAD, CONSTRUCTION WORK SHALL BE SPLIT INTO TWO STAGES FOR HALF CLOSURE IN ORDER TO MAINTAIN ACCESS.

LEGEND

- = CHANNELIZER (10' SPACING O.C.)
- = PLASTIC TRAFFIC DRUM (10' SPACING O.C.)
- = TEMPORARY SIGN POST
- = PLASTIC WATER-FILLED BARRIER (NCHRP 350 TL-2)
- = PORTABLE FLASHING BEACON
- = WORK ZONE

SIGN PANEL SIZE

A	48" X 48"
D	48" X 24"
Q	24" X 24"

PRELIMINARY
NOT
ISSUED FOR CONSTRUCTION

NO.	DATE	DESCRIPTION	GM/SPEC	DWN	CHKD	SUPV	APVD BY
0	06/29/12	ISSUED FOR PERMIT	30915268	DOC	EC	DKY	

REVISIONS

APPROVED BY	GM 30915268
	SUPV
DOC	DSGN EC
	DWN DOC
	CHKD EC
EC	OK DKY
DKY	DATE 06/29/12
	SCALES AS SHOWN

L-108 REPLACEMENT PROJECT
TRAFFIC CONTROL PLAN
HALF CLOSURE OF HARNEY LN
MP 39.17 – 39.47
SAN JOAQUIN COUNTY, CALIFORNIA
PACIFIC GAS AND ELECTRIC COMPANY
WALNUT CREEK, CALIFORNIA

MICROFILM
BILL OF MATL
DWG LIST
SUPSDS
SUPSD BY
SHEET NO. 1 OF 2 SHEETS
30915268 0

E:\PG&E\PSE\PL-108\CAD\L-108_Harney_HC_1.dwg, 6/29/2012 10:58:42 AM

PS-12-01646

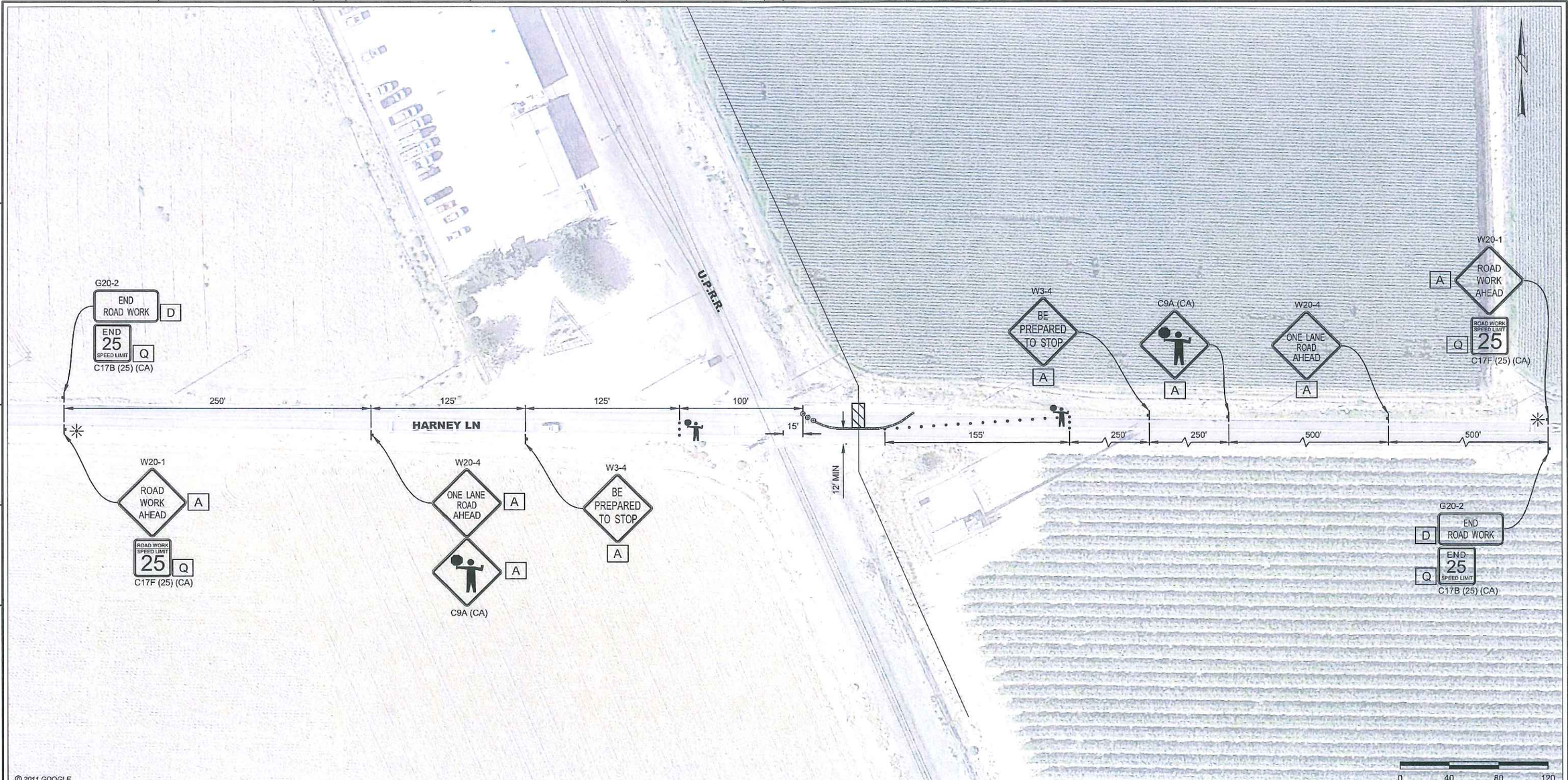

CONTRACTOR NOTES:

1. ALL TRAFFIC CONTROL DEVICES SHALL CONFORM TO THE LATEST EDITION OF CALIFORNIA MANUAL OF UNIFORM TRAFFIC CONTROL DEVICES (MUTCD) AND CALTRANS STANDARD PLANS AND SPECIFICATIONS.
2. THE LOCAL FIRE DEPARTMENT, SHERIFF/POLICE DEPARTMENT, CALIFORNIA HIGHWAY PATROL, LOCAL SCHOOL DISTRICT, TRANSIT SERVICE PROVIDERS AND UNITED STATES POSTAL SERVICE SHALL BE NOTIFIED 72 HOURS IN ADVANCE OF CONSTRUCTION WORK.
3. THE CONTRACTOR IS SOLELY RESPONSIBLE FOR THE REPAIR OF ANY DAMAGE TO EXISTING IMPROVEMENTS RESULTING FROM THE CONTRACTOR'S OPERATION. THIS REPAIR SHALL INCLUDE ALL CONSTRUCTION AND MATERIALS TO RESTORE THE SITE TO EXISTING CONDITIONS.
4. EACH ADVANCED WARNING SIGN ON EACH SIDE OF THE ROADWAY SHALL BE EQUIPPED WITH AT LEAST TWO FLAGS. FLASHING BEACONS SHALL BE PLACED AT THE LOCATION INDICATED FOR LANE CLOSURE DURING HOURS OF DARKNESS.
5. ALL WORKERS SHALL BE EQUIPPED WITH A REFLECTIVE VEST AND HARD HAT. ALL FLAGGERS SHALL ALSO BE EQUIPPED WITH A C28 "STOP/SLOW" PADDLE AND SHALL BE TRAINED IN THE PROPER FUNDAMENTALS OF FLAGGING TRAFFIC.
6. NO PARKING SIGNS SHALL BE PLACED 72 HOURS PRIOR TO SET UP. SIGNS SHALL BE POSTED EVERY 20 LINEAR FEET OF OCCUPIED SPACE WITH AT LEAST ONE SIGN AT EACH END OF OCCUPIED SPACE.
7. ANY CONFLICTING SIGNS WILL BE COVERED FOR THE LENGTH OF THE JOB.
8. CONTRACTOR SHALL MAINTAIN EMERGENCY VEHICLE AND DRIVEWAY ACCESS AT ALL TIMES.
9. Y&C TRANSPORTATION CONSULTANTS ASSUMES NO LIABILITY WHEN CONTRACTOR DOES OWN SET UP OR MAKES CHANGES TO THE ORIGINAL TRAFFIC CONTROL PLAN.
10. CITY/COUNTY ENGINEER OR HIS REPRESENTATIVE HAS THE AUTHORITY TO INITIATE FIELD CHANGES TO ASSURE PUBLIC SAFETY.
11. CONTRACTOR SHALL PROVIDE TRAFFIC CONTROL PLAN FOR CONSTRUCTION AREAS WHICH ARE NOT COVERED BY THESE TRAFFIC CONTROL PLANS.
12. CONTRACTOR SHALL FURNISH AND INSTALL WATER-FILLED BARRIER AND FENCE AROUND WORK ZONE FOR SAFETY PURPOSE.
13. WHEN WORK ZONE ENCROACHES OVER A DRIVEWAY OR CROSS ROAD, CONSTRUCTION WORK SHALL BE SPLIT INTO TWO STAGES FOR HALF CLOSURE IN ORDER TO MAINTAIN ACCESS.

LEGEND

- • = CHANNELIZER (10' SPACING O.C.)
- ⊗ = PLASTIC TRAFFIC DRUM (10' SPACING O.C.)
- = TEMPORARY SIGN POST
- = PLASTIC WATER-FILLED BARRIER (NCHRP 350 TL-2)
- ✳ = PORTABLE FLASHING BEACON
- ▨ = WORK ZONE

SIGN PANEL SIZE

A	48" X 48"
D	48" X 24"
Q	24" X 24"

PRELIMINARY
NOT
ISSUED FOR CONSTRUCTION

NO.	DATE	DESCRIPTION	GM/SPEC	DWN	CHKD	SUPV	APVD BY
0	06/29/12	ISSUED FOR PERMIT	30915268	DOC	EC	DKY	

REVISIONS

APPROVED BY	
GM	30915268
SUPV	
DSGN	EC
DWN	DOC
CHKD	EC
OK	DKY
DATE	06/29/12
SCALES	AS SHOWN

DOC
EC
DKY

L-108 REPLACEMENT PROJECT
TRAFFIC CONTROL PLAN
HALF CLOSURE OF HARNEY LN
MP 39.17 – 39.47
SAN JOAQUIN COUNTY, CALIFORNIA
PACIFIC GAS AND ELECTRIC COMPANY
WALNUT CREEK, CALIFORNIA

MICROFILM
BILL OF MATL
DWG LIST
SUPSDS
SUPSD BY
SHEET NO. 2 OF 2 SHEETS
30915268 0

E:\PG&E\PSEPL-108\CAD\L-108_Harney_HC_2.dwg, 6/29/2012 10:59:16 AM

PS-12-01646

BTU AREA: X-05
CP AREA: T-108-C
WALL MAP: 2869H1
SAN JOAQUIN COUNTY
CITY OF STOCKTON

L-108 REPLACEMENT MP 39.17 - MP 39.47
SAN JOAQUIN COUNTY

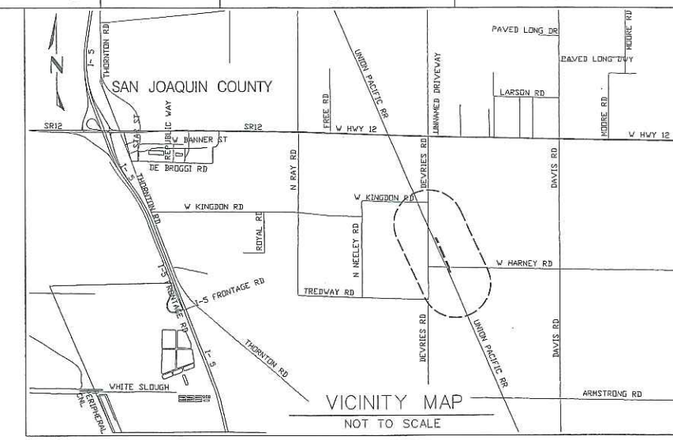

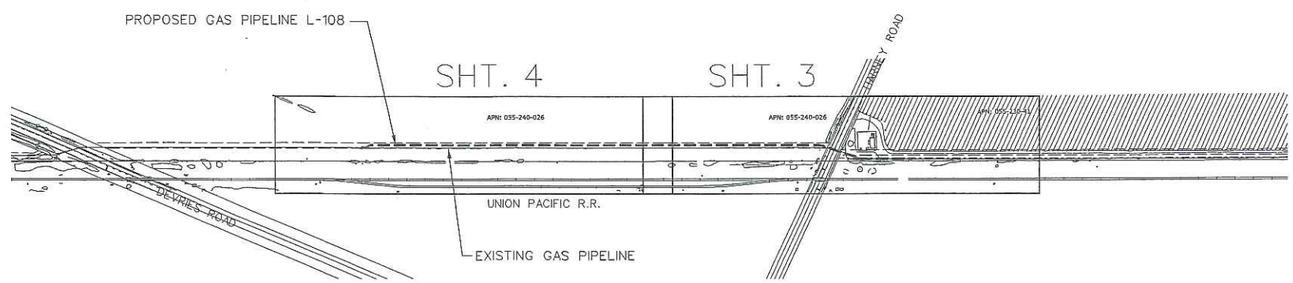

SCHEDULE OF SHEETS

SHEET 1 ------ COVER SHEET
SHEET 2 ----- GENERAL / CONSTRUCTION NOTES
SHEET 3-4 --- PIPELINE CONSTRUCTION DRAWINGS (PLAN AND PROFILE)
SHEET 5 ----- BILL OF MATERIALS
SHEET 6-7 --- CONSTRUCTION DETAILS
SHEET 8 ----- DEACTIVATION SHEET

REFERENCE DRAWINGS:

385160 -------- OPERATING MAP

SAFETY

SAFETY PLEDGE

I ALWAYS PUT SAFETY FIRST.
I LOOK FOR AND ACT TO RESOLVE UNSAFE SITUATIONS.
I HELP AND ENCOURAGE OTHERS TO ACT SAFELY.

REGISTERED PROFESSIONAL ENGINEER MARILYN ANN ADAMS No. C25717 Exp. 12-31-12 CIVIL STATE OF CALIFORNIA 6-26-12

CIE # 1518-108IM-DC-7000-00 PSRS# 26874

NO.	DATE	DESCRIPTION	GM/SPEC	DWN	CHKD	SUPV	APVD BY
1	06-26-12	ISSUE FOR CONSTRUCTION	30915268				

REVISIONS

APPROVED BY
JN 30915268
SUPV
DSGN
DWN
CHKD
OK
DATE 05-03-12
SCALES NONE

COVER SHEET
INSTALL 1,509' OF 24" PIPE
L-108 REPLACEMENT
MP 39.17 - MP 39.47
SAN JOAQUIN COUNTY
PACIFIC GAS AND ELECTRIC COMPANY
WALNUT CREEK, CALIFORNIA

MICROFILM
BILL OF MATL SHEET 5 OF 8
DWG LIST
SUPSDS
SUPSD BY
SHEET NO. 1 OF 8 SHEETS
30915268 | 1

PS-12-01646

SUMMARY OF PROPOSED WORK:

1. REPLACE 0.30 MILES (APPROXIMATELY 1,509 FEET) OF L-108 BETWEEN M.P. 39.17 AND M.P. 39.47 WITH NEW 24" NATURAL GAS TRANSMISSION PIPELINE.
2. TIE-IN INTO EXISTING L-108 AT APPROXIMATELY M.P. 39.17 & MP 39.47.
3. INSTALL PIPELINE WARNING SIGNS/MARKERS.
4. ABANDON IN PLACE EXISTING 16.00" PIPE BETWEEN M.P. 39.47.AND HARNEY ROAD.
5. SAME TRENCH REPLACEMENT OF EXISTING 16.00" PIPE AT HARNEY ROAD TO SOUTH TIE-IN MP 39.17.

CONTACT INFORMATION:

T&R SUPERVISOR	GARY KRAHMER	(209)-598-1114
CONSTRUCTION SUPERVISOR	NICK JORDAN	(209)-602-4649
PROJECT MANAGER	TOM GERBER	(925)-270-2122
PIPELINE ENGINEER (SACRAMENTO)	BRAD CARR	(916)-203-3110
ENGINEER / DESIGNER	ROB STANNERT (GIE)	(713)-850-3293

SEQUENCE OF OPERATIONS FOR PIPELINE AND STATION

REPLACE 0.30 MILES OF 16" PIPE L-108 REPLACEMENT PROJECT
OPERATING MAP #385160

1. EXCAVATE ALL EXISTING LINE PIPE TO BE REPLACED.
2. INSTALL NEW 24" LINE PIPE WITH OFFSET NORTH OF HARNEY ROAD.
3. INSTALL NEW 24" LINE PIPE WITH SAME TRENCH REPLACEMENT AT HARNEY ROAD TO SOUTH TIE-IN.
4. INSTALL ALL LINE PIPE THAT CAN BE INSTALLED WITHOUT REMOVING EXISTING PIPE.
5. INSTALL 16" STOPPLES AS SHOWN ON DRAWINGS; STOP THE FLOW.
6. VERIFY ALL EXISTING PIPE ELEVATIONS AND REVISE DRAWINGS AS NECESSARY.
7. HYDROTEST NEW PIPELINE; DEWATER AND PURGE IT.
8. GC TO PERFORM TIE-INS OF NEW LINE PIPE TO THE EXISTING LINE PIPE.
9. REMOVE STOPPLE, PLUGS AND REESTABLISH FLOW IN LINE L-108.
10. PURGE ABANDONED LINE WITH NITROGEN; PERFORM DEACTIVATION PROCEDURES.
11. INSTALL PIPELINE MARKERS AND TEST STATIONS; RESTORE CONSTRUCTION ROW.

CONSTRUCTION NOTES:

1) **WELDING REQUIREMENTS**
ALL ARC WELDING IS TO BE PERFORMED IN ACCORDANCE WITH GAS STANDARD D-22. ALL CANS OR SPOOLS SHALL BE A MINIMUM LENGTH OF ONE PIPE DIAMETER, WHENEVER POSSIBLE.

2) **WELDING VALVES AND FITTINGS**
WHEN VALVES AND FITTINGS 16" AND LARGER ARE WELDED TO EACH OTHER OR TO PIPE, THE JOINT SHALL HAVE A TWO PASS WELD ON THE INSIDE, AS WELL AS THE OUTSIDE WELD, IF THE INTERNAL MISALIGNMENT EXCEEDS 3/32". THIS REQUIREMENT ALSO APPLIES TO SMALLER DIAMETER VALVES AND FITTINGS WHEN IT IS PRACTICAL.

3) **HYDROSTATIC TEST REQUIREMENTS**
HYDROSTATIC TESTING SHALL MEET PRESSURE AND DURATION REQUIREMENTS OF GAS STANDARD A-34 AND SHALL BE CONDUCTED IN ACCORDANCE WITH GAS STANDARD A-37.

4) **PAINTING AND COATING REQUIREMENTS**
ALL EXPOSED PIPE AND FITTINGS ARE TO BE PAINTED IN ACCORDANCE WITH GAS STANDARD E-30.
ALL COATING ON BURIED PIPE AND FITTINGS ARE TO BE APPLIED IN ACCORDANCE WITH GAS STANDARD E-35 AS NOTED BELOW.

5) CALL USA AT LEAST TWO WORKING DAYS PRIOR TO EXCAVATION (811).

6) LOCATION OF EXISTING UNDERGROUND STRUCTURES ARE APPROXIMATE. BEFORE POWER OR HEAVY EQUIPMENT IS USED FOR EXCAVATION, THE EXACT DEPTH AND LOCATION OF UNDERGROUND STRUCTURES SHALL FIRST BE DETERMINED BY HAND EXCAVATION, IF NECESSARY.

7) ALL BENDS ARE SMOOTH FIELD BENDS EXCEPT WHERE ELBOWS ARE NOTED. FIELD BENDS SHALL BE MADE IN ACCORDANCE WITH GAS STANDARD A-36 SECTION 4-D.

8) ALL ANGLES SHOWN IN THE PLAN AND PROFILE ARE APPROXIMATE AND ELBOWS AND BENDS WHERE REQUIRED SHALL BE CUT TO SUIT THE FIELD CONDITION.

9) **COATING REMOVAL**
BEFORE REMOVING THE PIPE COATING ON PRE-1972 PIPE (DOES NOT INCLUDE PLASTIC TAPE OR FUSION BONDED EPOXY COATINGS) THE FOLLOWING STEPS SHALL BE TAKEN:
-FOR ALL NON-EMERGENCY WORK, PRE-1972 PIPE WRAP MUST BE **EVALUATED TO DETERMINE IF IT CONTAINS ASBESTOS PRIOR TO REMOVAL.**
-FOR EMERGENCY WORK ON PRE-1972 PIPE, ASSUME THE WRAP **CONTAINS > 1% ASBESTOS UNTIL THE WRAP CAN BE TESTED.**
-OBTAIN SAMPLES OF THE WRAP, AND HAVE SAMPLES TESTED **FOR ASBESTOS IN ACCORDANCE WITH RP 4711.**
-TEST RESULTS ARE TO BE INCLUDED WITH AS-BUILTS.
-FOLLOW PROCEDURE IN RP 4711 FOR REMOVAL OF PIPE WRAP.

10) **CLEARANCES FROM FOREIGN LINES & UNDERGROUND STRUCTURES**
THERE SHALL BE A 2-FOOT MINIMUM SEPARATION FROM ALL FOREIGN LINES OR UNDERGROUND STRUCTURES UNLESS STATED OTHERWISE.

11) **BORING OPERATIONS - CATHODIC PROTECTION TESTS**
UPON COMPLETION OF BORINGS CONTACT BYRON WINGET WITH THE CP DEPARTMENT TO PERFORM CORRECT DRAIN TESTS ON THE PIPELINE AT (925) 974-4081 OR BILL GRAVES AT (805) 423-7924.

12) **CONSTRUCTION BOUNDARIES**
THE CONSTRUCTION WORKING STRIP SHALL BE LIMITED TO THE LIMITS SHOWN ON THE CONSTRUCTION PLAN AND PROFILE DRAWINGS. PG&E WILL STAKE THESE LOCATIONS PRIOR TO CONSTRUCTION.

13) **MISCELLANEOUS INSTALLATIONS OF VARIOUS BILL OF MATERIALS**
INSTALL LINE MARKERS PER GS L-11.1
INSTALL ETS PER GS 0-10
INSTALL CATS PER GS 0-10.2

14) **DEACTIVATION PROCEDURE FOR EXISTING PIPE**
14.1 WP 4100-11 SHALL BE FOLLOWED.
14.2 THE EXISTING 16" GAS MAIN SHALL BE 100% PURGED WITH INERT GAS AS PER STANDARD A-38.
14.3 AT INTERVALS, NOT TO EXCEED 1,000 FEET, THE 16" MAIN SHALL BE CUT AND PLATED.

15) AT EACH SUCH LOCATION NOTED ABOVE, A PIECE OF PIPE AT LEAST 18" LONG SHALL BE REMOVED. THE OPEN ENDS OF ABANDONED MAIN SHALL BE SEALED BY THE MOST APPROPRIATE METHOD OUTLINED IN WP 4100-11. BACKFILL MUST BE THOROUGHLY COMPACTED IN PLACE OF THE REMOVED SECTION OF PIPE.

16) SERVICE CONNECTIONS TO BE ABANDONED AS INDICATED ON THE DRAWINGS SHALL BE CUT AND PLATED.

17) VALVES AND CURB COCKS MAY BE REMOVED AND SALVAGED IF THE COST OF REMOVAL IS JUSTIFIED. THE OPEN ENDS OF PIPE SHALL BE SEALED AS NOTED ABOVE.

18) ALL DESIGN CHANGES REQUIRE APPROVAL BY ENGINEER OF RECORD WHO STAMPED OR ISSUED ORIGINAL DESIGN DRAWINGS OR UPDATES

19) TIE-IN AND HOT TAP WORK, IF NEEDED, TO BE PERFORMED BY GC YOSEMITE DIVISION.

20) ALL PIPE REMOVED MUST FOLLOW PG&E CHAIN OF CUSTODY PROCESS PER WORK PROCEDURE TD-4100P-14.

21) REPLACE AND SOD ORIGINAL SOIL. RETURN PAVEMENT/GROUNDS BACK TO AS GOOD OR BETTER THAN ORIGINAL CONDITION.

LEGEND:

- CABLE TV RISER
- MANHOLE DRAIN
- MANHOLE SEWER
- TELEPHONE BOX
- BLOW OFF VALVE
- SEWER CLEANOUT
- WATER METER
- UTILITY RISER
- AIR RELEASE VALVE
- UNDERGROUND TELE. SIGN
- PMT TELEPHONE PAINT MARK
- MANHOLE TELEPHONE
- UNDERGROUND GAS SIGN
- GPM GAS PAINT MARK
- 62.5 SPOT ELEVATION
- SIGN
- GUY
- PANEL BOX
- POWER POLE
- SMUD BOX
- TRAF LIGHT
- PANEL BOX
- ———— PROPOSED GAS PIPELINE
- ———— EASEMENT BOUNDARY LINE
- CATS COUPON AUTOMATED TEST STATION
- ETS ELECTROLYSIS TEST STATION
- R POLE-MOUNTED RECTIFIER
- A DEEPWELL ANODE
- PIPELINE MARKER
- "H" PIPELINE HORIZONTAL STATION
- "P" PIPELINE FOOTAGE
- # B/M ITEM NO.
- /// LINE PIPE TO BE ABANDONED

ENVIRONMENTAL ISSUES

☒ NONE APPARENT (IF PROJECT DESIGN CHANGES, CONTACT RESPONSIBLE ENGR)

☐ PERMITS ☒ TAILBOARD ☐ OTHER TRAINING

☐ APPLICANT DESIGN/RESPONSIBILITY (CHECK PERMITS BOX IF PERMIT CONDITIONS APPLY TO PG&E ACTIONS)

BY: _____
Signature, name, [Corporate ID], date

ROPING TABLE

MIN DISTANCE REQUIRED TO ROPE AN OFF-SET OF 24" OD x 0.375" WT API-5L, X60 SAWL PIPE. MIN ROPING RADIUS=3000'

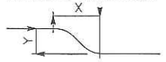

Y	X	Y	X
1.0	110	3.0	190
1.5	134	3.5	205
2.0	155	4.0	219
2.5	173	5.0	245

MAX WHEEL LOAD FOR 16" O.D., 0.250" W.T., 33000 psi, AOS

4' COVER	13200
3' COVER	9000
2' COVER	4800

NOTES: 1.) PIPE SPECIFICATION AND DESIGN FACTORS WERE PROVIDED BY PG&E.
2.) CLASS LOCATION WERE PROVIDED BY PG&E.

UNDERGROUND SERVICE ALERT — USA — CALL TWO DAYS BEFORE YOU DIG — CALL:1-811

NOTIFIED U.S.A.
DATE TICKET NO. BY

WELDING INSPECTED PER PG&E GAS STANDARD D-40
VISUAL _____ ☐
MAGNETIC PARTICLE _____ ☐
INSPECTOR _____
DATE _____

DIRECT BURIAL COATING SELECTIONS
LISTED IN ORDER OF PREFERENCE

MAIN LINE COATING	FBE
MINOR REPAIRS	PROTAL 7200, POWERCRETE J
TIE-IN WELDS	PROTAL 7200, POWERCRETE J
GIRTH WELDS	PROTAL 7200, POWERCRETE J
BUTT WELDED FITTINGS	PROTAL 7200, POWERCRETE J
VALVE ASSEMBLIES	PROTAL 7200, POWERCRETE J
SHORT SEGMENTS OF PIPE	PROTAL 7200, POWERCRETE J
AIR-TO-SOIL TRANSITIONS	DEVGRIP 238, POWERCRETE J
PRESSURE CONTROL FITTINGS BODY	PROTAL 7200
FLANGE	WAX TAPE

BORED COATING SELECTIONS
LISTED IN ORDER OF PREFERENCE

MAIN LINE COATING	ARC APPLIED OVER FBE
MINOR REPAIRS	PROTAL 7200, POWERCRETE J
GIRTH WELDS	PROTAL 7200, POWERCRETE J

NOTES:
1) CONTACT THE RESPONSIBLE PIPELINE ENGINEER TO REQUEST A VARIANCE FROM THE ABOVE COATING SELECTIONS
2) ALL COATINGS ARE TO BE APPLIED IN ACCORDANCE WITH GS&S E-30 AND E-35

Installation Tested or Inspected and Noted on Drawing. All Levels Satisfactory per PG&E GS&S 0-16

_____ Qualified Employee _____ Date

Corrosion mechanic's signature is required when a CPA boundary is within the scope of the project

DESIGN & CONSTRUCTION REVIEW FOR INTERNAL CORROSION

DESCRIPTION	ACTION SELECTED	INITIAL	DATE
CORROSION ENGINEER HAS REVIEWED THIS LOCATION AND THERE IS NO KNOWN THREAT OF INTERNAL CORROSION. NO INTERNAL CORROSION DESIGN OR CONSTRUCTION CONSIDERATIONS ARE NECESSARY.	X	JR	5/21/12
INTERNAL CORROSION MAY BE A THREAT AND THE CONSTRUCTION DESIGNS HAVE BEEN REVIEWED WITH CORROSION ENGINEERING. DOCUMENTATION OF THE REVIEW AND ACTIONS TAKEN ARE IN THE JOB PACKAGE AND INCORPORATED IN THIS DESIGN.			

SAFETY

SAFETY PLEDGE
I ALWAYS PUT SAFETY FIRST.
I LOOK FOR AND ACT TO RESOLVE UNSAFE SITUATIONS.
I HELP AND ENCOURAGE OTHERS TO ACT SAFELY.

PG&E

REGISTERED PROFESSIONAL ENGINEER — MARILYN A HANNON — No. C25717 — Exp. 12-31-12 — CIVIL — STATE OF CALIFORNIA — 6-22-12

GIE # 1518-108M-DC-7001-00 PSRS# 26874

NO.	DATE	DESCRIPTION	GM/SPEC	DWN	CHKD	SUPV	APVD BY
1	06-26-12	ISSUE FOR CONSTRUCTION	30915268	BC	MB	RS	RS

REVISIONS

APPROVED BY
IN 30915268
SUPV
DSGN
DWN
CHKD
OK
DATE 05-03-12
SCALES NONE

GENERAL CONSTRUCTION NOTES
INSTALL 1,509' OF 24" PIPE
L-108 REPLACEMENT
MP 39.17 - MP 39.47
SAN JOAQUIN COUNTY
PACIFIC GAS AND ELECTRIC COMPANY
WALNUT CREEK, CALIFORNIA

MICROFILM
BILL OF MATL SHEET 5 OF 8
DWG LIST
SUPSDS
SUPSD BY
SHEET NO. 2 OF 8 SHEETS
30915268 1

PS-12-01646

EASEMENT/ WORK SPACE
- PULL BACK TEMPORARY WORKSPACE
- DRILL RIG FOOTPRINT WORKSPACE
- TEMPORARY WORKSPACE
- PERMANENT EASEMENT

ENVIRONMENTAL: GENERAL | CLASS LOC | CULTURAL | BIOLOGICAL | WATERBODIES | EXCLUSIONS

RIGHT OF WAY
TRACT NUMBER
OWNERSHIP/AGENCY
PROPERTY SKETCH NO.
PERMIT DWG. NO

COUNTY OF SAN JOAQUIN (FRANCHISE)

SURVEY PLAN — SCALE: 1"= 40'

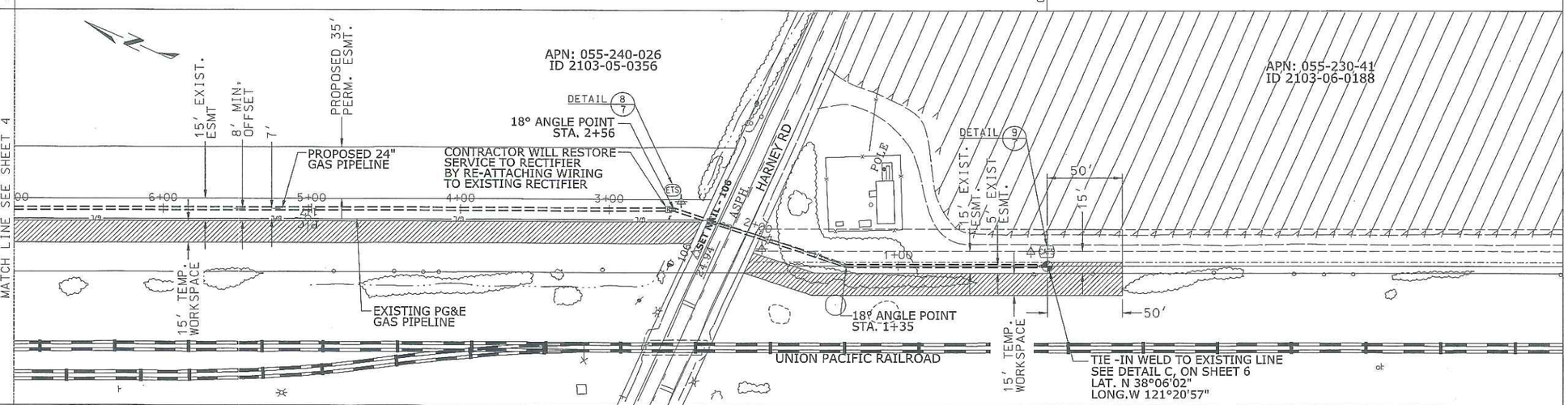

SURVEY PROFILE — VERTICAL SCALE: 1"=10' HORIZONTAL SCALE: 1"= 40'

ELEVATION DATUM:
LOCATION OF BENCH MARK:

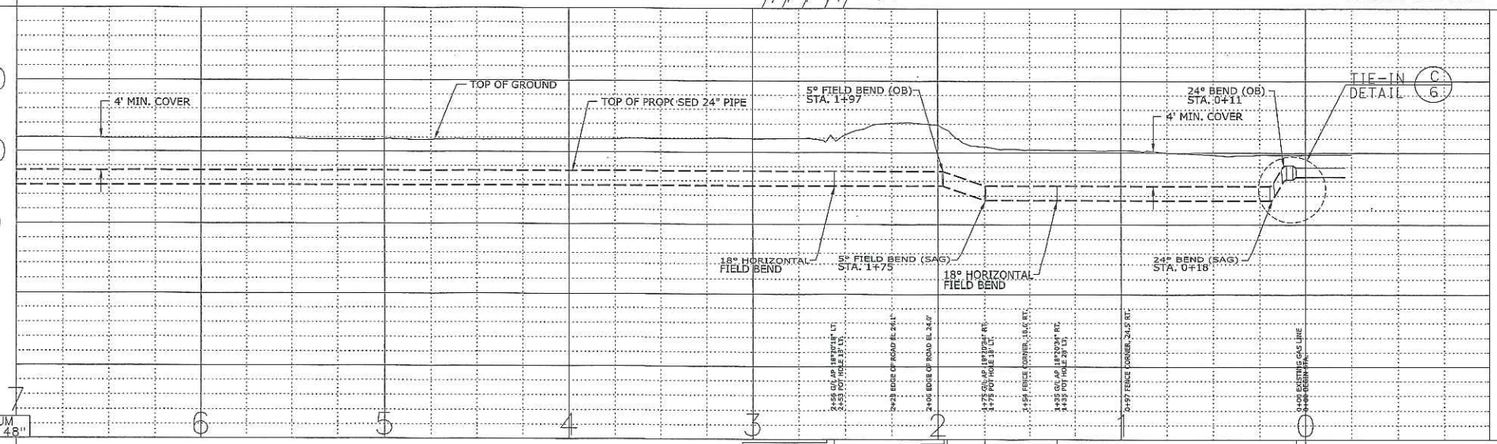

PIPELINE DETAILS
STATIONING

MATCH LINE H STA. 7+00 P STA. 7+00

695' OF 24.00" APL-5L, X-60, SAWL (DSAW), 0.375" W.T. — ITEM# 1

STA. 2+60 RECTIFIER ITEM #5 | STA. 2+56 18° LT. FIELD BEND | STA. 2+56 P/L MKR ITEM #9 DETAIL D, SHT. 7 | STA. 2+56 ETS ITEM #15 DETAIL 6, SHT. 7 | STA. 1+97 5° FIELD BEND (OB) | STA. 1+95 P/L MKR ITEM #9 DETAIL D, SHT. 7 | STA. 1+75 5° FIELD BEND (SAG) | STA. 1+35 18° RT. FIELD BEND | STA. 0+05 REDUCER 24 X16 ITEM # 4 STA. 0+05 | STA. 0+00 CATS ITEM #17 DETAIL 9, SHT. 7 | STA. 0+00 P/L MKR ITEM #9 DETAIL D, SHT. 7 | BEGIN PIPELINE REPLACEMENT H STA. 0+00 P STA. 0+00

5' OF 16.00" APL-5L, X-52, HFW (ERW), 0.312" W.T. — ITEM# 7

GIE # 1518-108IM-DG-7002-00 PSRS# 26874

STA. STA. 0+05 TO STA. 7+00
JOB NO. 30915268
B/M ITEM NO. 1
DESIGN CRITERIA
LOCATION CLASS 3
DESIGN FACTOR 0.5
FDP 720 PSIG 38.40 % SMYS
MAOP 412 PSIG 21.97 % SMYS
STRENGTH TEST PRESSURE
MAX. 1725 PSIG 92.00 % SMYS
MIN. 1688 PSIG 90.03 % SMYS
1688 PSIG-90% SMYS
TEST MEDIUM WATER
PIPE SPEC API-5L, X-60, SAWL (DSAW)
O.D. 24.00"
W.T. 0.375"
WELD INSPECTION (GAS STD.D-40)*
☒ RADIOGRAPHIC:
☐ 20% MIN. (% OF EACH WELDER'S
☒ 100% DAILY WORK)
*VISUALLY INSPECT 100% OF ALL WELDS THAT ARE NOT RADIOGRAPHICALLY INSPECTED. (THIS REQUIREMENT APPLIES EVEN IF NO RADIOGRAPHIC INSPECTION IS REQUIRED.)

STA. STA. 0+00 TO STA 0+05
JOB NO. 30915268
B/M ITEM NO. 7
DESIGN CRITERIA
LOCATION CLASS 3
DESIGN FACTOR 0.5
FDP 720 PSIG 35.50 % SMYS
MAOP 412 PSIG 20.32 % SMYS
STRENGTH TEST PRESSURE
MAX. 1725 PSIG 85.06 % SMYS
MIN. 1688 PSIG 83.23 % SMYS
1825 PSIG-90% SMYS
TEST MEDIUM WATER
PIPE SPEC API-5L, X-52 HFW (ERW)
O.D. 16.00"
W.T. 0.312"
WELD INSPECTION (GAS STD.D-40)*
☒ RADIOGRAPHIC:
☐ 20% MIN. (% OF EACH WELDER'S
☒ 100% DAILY WORK)
*VISUALLY INSPECT 100% OF ALL WELDS THAT ARE NOT RADIOGRAPHICALLY INSPECTED. (THIS REQUIREMENT APPLIES EVEN IF NO RADIOGRAPHIC INSPECTION IS REQUIRED.)

EXIST PIPE SPECS L-108 PIPE (SOUTH END)
HEADER SIZE: 16.00 INCHES
PIPE SPECS: GR B (PER GIS)
WALL THICKNESS: 0.250 INCHES
PRESENT MAOP: 412
% SMYS @ MAOP: 39.95
MAXIMUM ALLOWABLE PRESSURE DURING WELDING (G.S.&S. D-22)

EVALUATE THE FOLLOWING OPERATING PRESSURE LIMITATIONS TO DETERMINE THE MAXIMUM OPERATING PRESSURE PERMITTED DURING WELDING

A) (322 PSIG) WHEN WELDING ON BODY OF THE PIPE, UNLESS,

B) (206 PSIG) WHEN WELDING WITHIN 3" OF THE LONGITUDINAL SEAM (EXCEPT DSAW PIPE), THE CIRCUMFERENTIAL, AND ANY BRANCH WELD, OR WITHIN 3" OF ANY DEFECT (GOUGES, CORROSION, LAMINATIONS, ETC.) IN THE PIPE WHICH EXCEEDS 1/3 OF THE NOMINAL WALL THICKNESS IN DEPTH AND/OR 1/4 OF THE NOMINAL PIPE DIAMETER IN LENGTH.

SAFETY

SAFETY PLEDGE

I ALWAYS PUT SAFETY FIRST.
I LOOK FOR AND ACT TO RESOLVE UNSAFE SITUATIONS.
I HELP AND ENCOURAGE OTHERS TO ACT SAFELY.

PG&E

REGISTERED PROFESSIONAL ENGINEER — JONATHAN DAVI RYAN — No. C25717 Exp. 6-30-13 — CIVIL — STATE OF CALIFORNIA — 6-26-12

UNDERGROUND SERVICE ALERT — USA — CALL 2 DAYS BEFORE YOU DIG — CALL:1-811

NOTIFIED U.S.A.
DATE TICKET NO. BY

WELDING INSPECTED PER PG&E GAS STANDARD D-40
VISUAL ☐
MAGNETIC PARTICLE ☐
INSPECTOR
DATE

NO.	DATE	DESCRIPTION	GM/SPEC	DWN	CHKD	SUPV	APVD BY
1	06-26-12	ISSUE FOR CONSTRUCTION	30915268	BL	MR	KS	KS

REVISIONS

APPROVED BY: JN 30915268 | SUPV | DSGN | DWN | CHKD | OK | DATE 05-03-12 | SCALES 1"=40'

PIPELINE - PLAN & PROFILE
INSTALL 1,509' OF 24" PIPE
L-108 REPLACEMENT
MP 39.17 - MP 39.47
SAN JOAQUIN COUNTY
PACIFIC GAS AND ELECTRIC COMPANY
WALNUT CREEK, CALIFORNIA

MICROFILM
BILL OF MATL SHEET 5 OF 8
DWG LIST
SUPSDS
SUPSD BY
SHEET NO. 3 OF 8 SHEETS
30915268 | 1

PS-12-01646

EASEMENT/ WORK SPACE

- PULL BACK TEMPORARY WORKSPACE
- DRILL RIG FOOTPRINT WORKSPACE
- TEMPORARY WORKSPACE
- PERMANENT EASEMENT

ENVIRONMENTAL: GENERAL | CLASS LOC | CULTURAL | BIOLOGICAL | WATERBODIES | EXCLUSIONS

RIGHT OF WAY — TRACT NUMBER / OWNERSHIP/AGENCY — PROPERTY SKETCH NO. / PERMIT DWG. NO

15+07 — COUNTY OF SAN JOAQUIN (FRANCHISE) — 7+00

SURVEY PLAN — SCALE: 1"= 40'

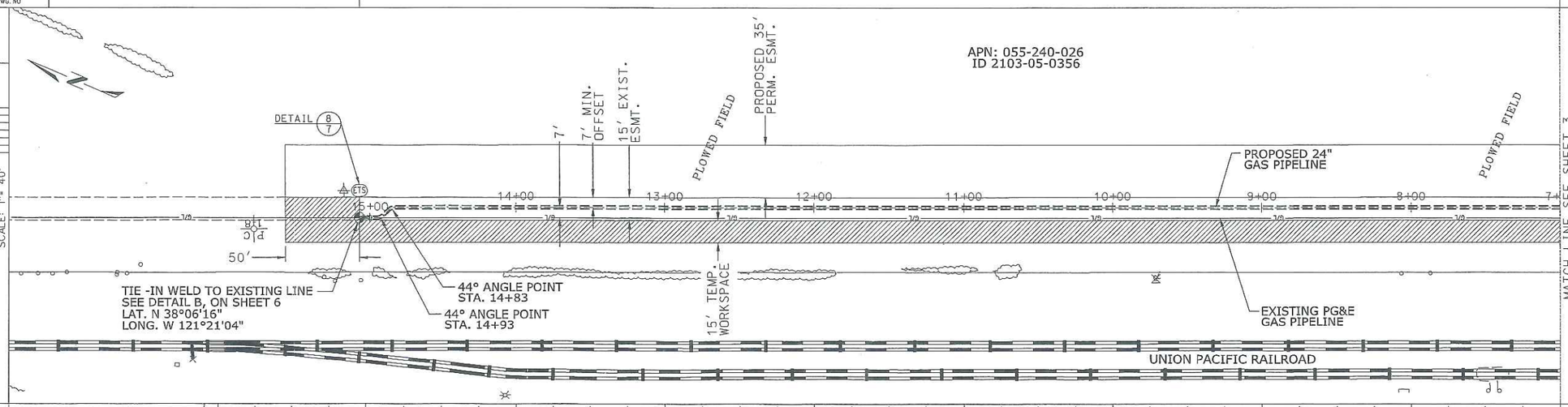

SURVEY PROFILE — ELEVATION DATUM: LOCATION OF BENCH MARK: — VERTICAL SCALE: 1"=10' — HORIZONTAL SCALE: 1"= 40'

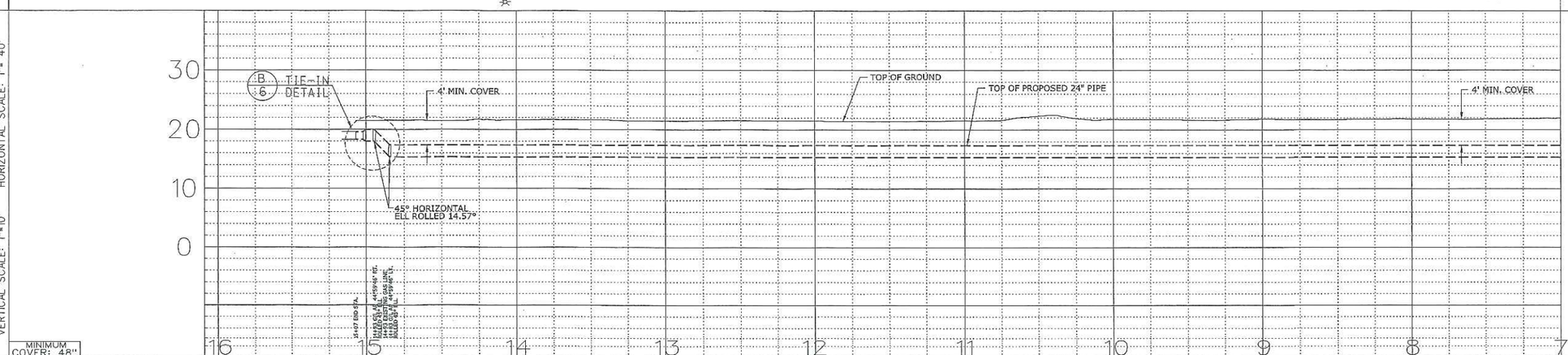

MINIMUM COVER: 48"

PIPELINE DETAILS STATIONING

END PIPELINE REPLACEMENT	H STA. 15+07 P STA. 15+07	STA. 15+07 ETS ITEM #15 DETAIL 6, SHT. 7	STA. 15+07 P/L MKR. ITEM #9 DETAIL D, SHT. 7	STA. 15+02	STA. 15+02 REDUCER, 24 X16 ITEM # 4
		5' OF 16.00" APL-5L, X-52, HFW (ERW), 0.312" W.T. ITEM# 7			STA. 14+93 45° ELL (OB) (ROLLED) ITEM #3
					STA. 14+93 45° ELL (SAG) (ROLLED) ITEM #3

802' OF 24.00" APL-5L, X-60, SAWL (DSAW), 0.375" W.T. ITEM# 1

MATCH LINE H STA. 7+00 P STA. 7+00

GIE # 1518-108IM-DG-7002-00 PSRS# 26874

STA. STA. 7+00 TO STA 15+02
JOB NO. 30915268
B/M ITEM NO. 1
DESIGN CRITERIA
LOCATION CLASS 3
DESIGN FACTOR 0.5
FDP 720 PSIG 38.40 % SMYS
MAOP 412 PSIG 21.97 % SMYS
STRENGTH TEST PRESSURE
MAX. 1725 PSIG 92.00 % SMYS
MIN. 1688 PSIG 90.03 % SMYS
1688 PSIG-90% SMYS
TEST MEDIUM WATER
PIPE SPEC API-5L, X-60, SAWL (DSAW)
O.D. 24.00"
W.T. 0.375"
WELD INSPECTION (GAS STD.D-40)*
☒ RADIOGRAPHIC:
☐ 20% MIN. (% OF EACH WELDER'S DAILY WORK)
☒ 100%
*VISUALLY INSPECT 100% OF ALL WELDS THAT ARE NOT RADIOGRAPHICALLY INSPECTED. (THIS REQUIREMENT APPLIES EVEN IF NO RADIOGRAPHIC INSPECTION IS REQUIRED.)

STA. STA. 15+02 TO STA 15+07
JOB NO. 30915268
B/M ITEM NO. 7
DESIGN CRITERIA
LOCATION CLASS 3
DESIGN FACTOR 0.5
FDP 720 PSIG 35.50 % SMYS
MAOP 412 PSIG 20.32 % SMYS
STRENGTH TEST PRESSURE
MAX. 1725 PSIG 85.06 % SMYS
MIN. 1688 PSIG 83.23 % SMYS
1825 PSIG-90% SMYS
TEST MEDIUM WATER
PIPE SPEC API-5L, X-52, HFW (ERW)
O.D. 16.00"
W.T. 0.312"
WELD INSPECTION (GAS STD.D-40)*
☒ RADIOGRAPHIC:
☐ 20% MIN. (% OF EACH WELDER'S DAILY WORK)
☒ 100%
*VISUALLY INSPECT 100% OF ALL WELDS THAT ARE NOT RADIOGRAPHICALLY INSPECTED. (THIS REQUIREMENT APPLIES EVEN IF NO RADIOGRAPHIC INSPECTION IS REQUIRED.)

EXIST PIPE SPECS L-108 PIPE (NORTH END)
HEADER SIZE: 16.00 INCHES
PIPE SPECS: GR B (PER GIS)
WALL THICKNESS: 0.250 INCHES
PRESENT MAOP: 412
% SMYS @ MAOP: 39.95
MAXIMUM ALLOWABLE PRESSURE DURING WELDING (G.S.&S. D-22)
EVALUATE THE FOLLOWING OPERATING PRESSURE LIMITATIONS TO DETERMINE THE MAXIMUM OPERATING PRESSURE PERMITTED DURING WELDING A) (322 PSIG) WHEN WELDING ON BODY OF THE PIPE, UNLESS, B) (206 PSIG) WHEN WELDING WITHIN 3" OF THE LONGITUDINAL SEAM (EXCEPT DSAW PIPE) THE CIRCUMFERENTIAL, AND ANY BRANCH WELD OR WITHIN 3" OF ANY BRANCH COUPLES, CORROSION, EXCAVATIONS, ETC. THE NOMINAL WALL EXCEEDS 1/4 THE NOMINAL WALL THICKNESS IN DEPTH, AND/OR 1/4 OF THE NOMINAL PIPE DIAMETER IN LENGTH.

SAFETY

SAFETY PLEDGE

I ALWAYS PUT SAFETY FIRST.
I LOOK FOR AND ACT TO RESOLVE UNSAFE SITUATIONS.
I HELP AND ENCOURAGE OTHERS TO ACT SAFELY.

PG&E

REGISTERED PROFESSIONAL ENGINEER — MALVIN A. WONG — No. C25717 — Exp. 12-31-13 — CIVIL — STATE OF CALIFORNIA — 4-27-12

UNDERGROUND SERVICE ALERT — CALL TWO WORKING DAYS BEFORE YOU DIG — CALL:1-811

NOTIFIED U.S.A.
DATE TICKET NO. BY

WELDING INSPECTED PER PG&E GAS STANDARD D-40
VISUAL ☐
MAGNETIC PARTICLE ☐
INSPECTOR
DATE

NO.	DATE	DESCRIPTION	GM/SPEC	DWN	CHKD	SUPV	APVD BY
1	06-26-12	ISSUE FOR CONSTRUCTION	30915268				

REVISIONS

APPROVED BY: JN 30915268 — SUPV — DSGN — DWN — CHKD — OK — DATE 05-03-12 — SCALES 1"=40'

PIPELINE - PLAN & PROFILE
INSTALL 1,509' OF 24" PIPE
L-108 REPLACEMENT
MP 39.17 - MP 39.47
SAN JOAQUIN COUNTY
PACIFIC GAS AND ELECTRIC COMPANY
WALNUT CREEK, CALIFORNIA

MICROFILM
BILL OF MATL SHEET 5 OF 8
DWG LIST
SUPSDS
SUPSD BY
SHEET NO. 4 OF 8 SHEETS
30915268 | 1

PS-12-01646

PG&E CODE	ITEM NO.	QNTY	ORDER NO. 30915268 DESCRIPTION	CATALOG OR DWG REFERENCE	OTHER DATA
01-0790	1	1600 LF	PIPE, STEEL, 24.00" O.D.x 0.375" W.T., API 5L, GRADE X-60, DSAW/SAWL, FBE COATED	GS A-15 EMS-4120	
	2		DELETED		
02-2999	3	4 EA.	ELBOW 24" PIPE O.D., 45° 0.375" W.T. STANDARD, LONG RADIUS, CARBON STEEL, GRADE WPHY 60, SUITABLE FOR SEGMENTING PER MSS-SP-75	GS B-20.2 MSS-SP-75 EMS-4121	
	4	2 EA.	REDUCER 24" X 16", BUTT WELD, STANDARD, CONCENTRIC CARBON STEEL, WALL THICKNESS 0.375" GR Y-60, MSS-SP-75 24" END BEVELED TO MATCH 0.375" WELD END PIPE; 16" END BEVELED TO MATCH 0.312" WELD END PIPE	GS B-20.2 EMS 4121	
M022289	5	4 EA.	SAVE-A-VALVE, 2", NIPPLE, MUELLER TYPE H-17491, 1440 PSIG, MAX GWP, WITH STEEL CAP	GS C-14	
	6	2 EA.	FITTING, TDW STOPPLE, 16", ANSI 600, PIGGABLE TYPE		
M010038	7	20 LF	PIPE, STEEL, 16.00" O.D.x 0.312" W.T., API 5L, GRADE X-52, HFW (ERW), FBE COATED	GS A-15 EMS-4120	
01-8293	8	4	FIBER REINFORCED COMPOSITE MARKER PADDLE	GS&S L-11.1	
01-8562	9	4	PIPELINE MARKER, SIGN KIT GAS STD L-11.1	GS&S L-11.1	
01-8704	10	4	CLAMP ON U-BRACKET ASSEMBLY FOR MARKER PADDLE	GS&S L-11.1	
29-4991	11	AS REQ.	WIRE, #10 HMWPE, SOLID COPPER, BLACK INSULATION	GS&S O-10	
30-3755	12	6 EA.	SLEEVE, COPPER, THERMOWELD, A200	GS&S O-10	
56-2324	13	6 EA.	HANDY CAP, ROYSTON, 4" X 4" PATCH	GS&S O-27	
15-9260	14	6 EA.	CARTRIDGE, CADWELD OR THERMOWELD 15 GRAM	GS&S O-10	
56-9390	15	2 EA.	ELECTROLYSIS TEST STATION	GS&S O-10	
24-1269	16	1 EA.	ELECTRODE REFERENCE GMC STAPERM CUCUSO4, GMC ELECTRICAL #CU-2-FW, W1 POINTED CERAMIC TIP, AND 15 OF #14 RHH-RHW YELLOW WIRE. (EACH UNIT SHOULD BE PACKED WITH SPECIAL NON-ORGANIC CASING MUD)	GS&S O-10.2	
23-3259	17	1 EA.	MONITOR COUPON AUTOMATED TEST STATION (CATS) OMNITREX # 504RMFFP8 W/PG&E LOGO GAS DISTRIBUTION 2'-4' TELESCOPING TEST HEAD DATA MANAGEMENT FEE INCLUDED. FOR REMOTE MONITORING OF PIPE-TO-SOIL ON, INSTANT OFF AND NATIVE COUPON POTENTIALS. GAS STANDARD AND SPECIFICATION O-10.2 INSTALLATION AND MONITORING OF COUPON TEST STATIONS.	OMNITREX GS&S O-10.2	
87-0000	18	AS REQ.	CONCRETE		

POT HOLE TABLE

POTHOLE IDENTIFYING NUMBER	UTILITY TYPE	PIPE DIAMETER	UTILITY OWNER	PG&E PIPELINE STATION	DISTANCE LEFT OR RIGHT OF PREFERRED CL	DEPTH OF COVER TO TOP UTILITY	NOTES
#1	GAS	16"	PG&E	1+35	28' LT.	1'-2" T.O.P.	
#2	GAS	16"	PG&E	1+75	18' LT.	3'-0" T.O.P.	
#3	GAS	16"	PG&E	2+53	13' LT.	1'-6" T.O.P.	

SAFETY

SAFETY PLEDGE

I ALWAYS PUT SAFETY FIRST.
I LOOK FOR AND ACT TO RESOLVE UNSAFE SITUATIONS.
I HELP AND ENCOURAGE OTHERS TO ACT SAFELY.

REGISTERED PROFESSIONAL ENGINEER MARCIN ANDRZEJ TAN No. C25717 Exp. 12-31-13 CIVIL STATE OF CALIFORNIA 6-26-12

GIE # 1518-108IM-DG-7003-00 PSRS# 26874

NO.	DATE	DESCRIPTION	GM/SPEC	DWN	CHKD	SUPV	APVD BY
1	06-26-12	ISSUE FOR CONSTRUCTION	30915268				

REVISIONS

APPROVED BY
JN 30915268
SUPV
DSGN
DWN
CHKD
OK
DATE 05-03-12
SCALES NONE

BILL OF MATERIALS
INSTALL 1,509' OF 24" PIPE
L-108 REPLACEMENT
MP 39.17 - MP 39.47
SAN JOAQUIN COUNTY
PACIFIC GAS AND ELECTRIC COMPANY
WALNUT CREEK, CALIFORNIA

MICROFILM
BILL OF MATL SHEET 5 OF 8
DWG LIST
SUPSDS
SUPSD BY
SHEET NO. 5 OF 8 SHEETS
30915268 1

PS-12-01646

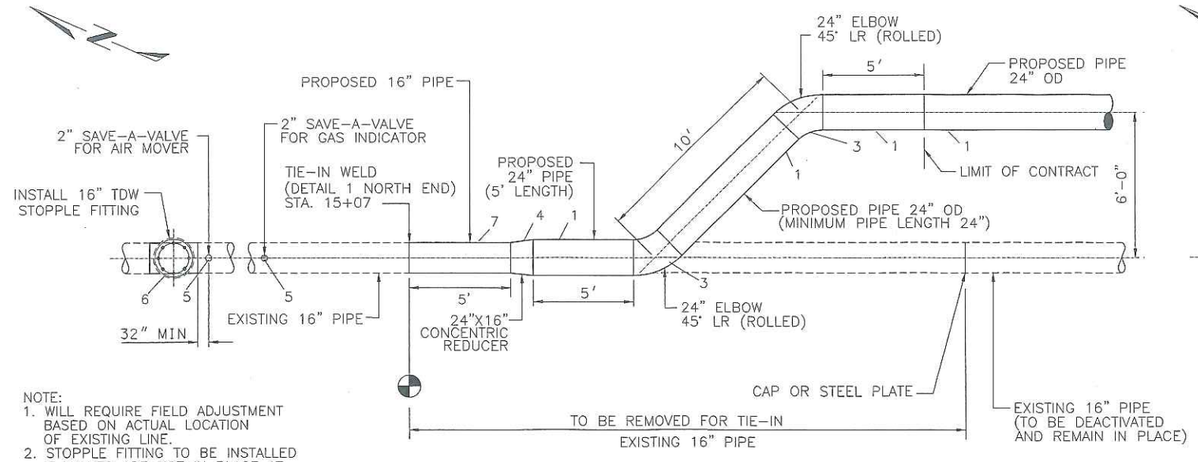

NOTE:
1. WILL REQUIRE FIELD ADJUSTMENT BASED ON ACTUAL LOCATION OF EXISTING LINE.
2. STOPPLE FITTING TO BE INSTALLED IF VALVES ARE NOT IN PLACE AT TIME OF CONSTRUCTION

PLAN VIEW

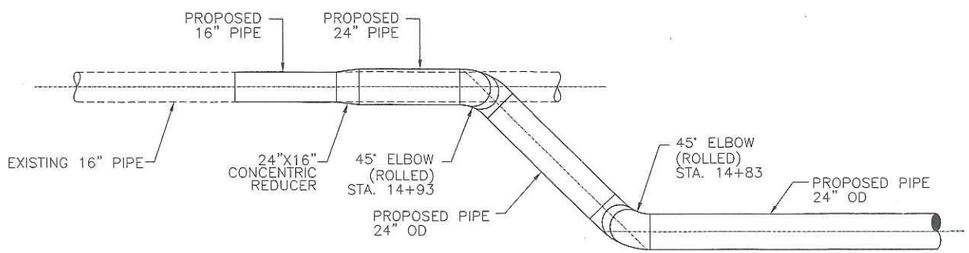

ELEVATION

TIE-IN TO EXISTING PIPELINE (NORTH END) — DETAIL B — NO SCALE

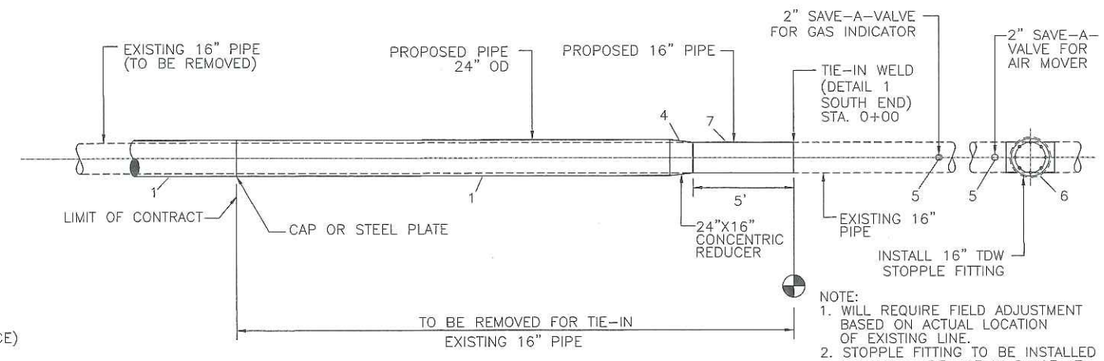

NOTE:
1. WILL REQUIRE FIELD ADJUSTMENT BASED ON ACTUAL LOCATION OF EXISTING LINE.
2. STOPPLE FITTING TO BE INSTALLED IF VALVES ARE NOT IN PLACE AT TIME OF CONSTRUCTION

PLAN VIEW

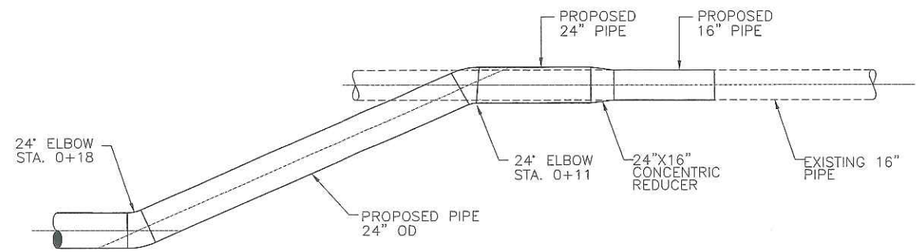

ELEVATION

TIE-IN TO EXISTING PIPELINE (SOUTH END) — DETAIL C — NO SCALE

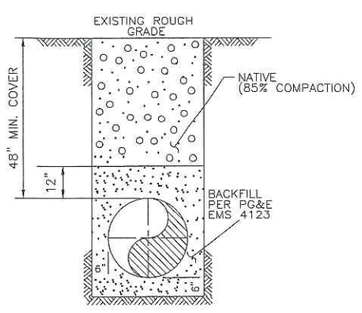

DETAIL 4 — NO SCALE — TYPICAL TRENCH (OUTSIDE OF PAVEMENT)

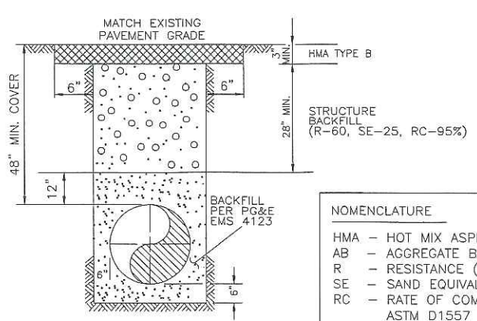

DETAIL 5 — NO SCALE — TYPICAL TRENCH (UNDER PAVEMENT)

NOMENCLATURE

HMA – HOT MIX ASPHALT
AB – AGGREGATE BASE
R – RESISTANCE (R-VALUE)
SE – SAND EQUIVALENT
RC – RATE OF COMPACTION ACCORDING TO ASTM D1557 MODIFIED PROCTOR MAX. DRY DENSITY

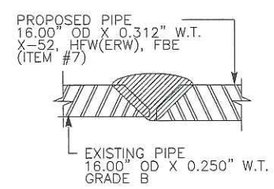

DETAIL 1 — NO SCALE

SAFETY PLEDGE

I ALWAYS PUT SAFETY FIRST.
I LOOK FOR AND ACT TO
RESOLVE UNSAFE SITUATIONS.
I HELP AND ENCOURAGE
OTHERS TO ACT SAFELY.

GIE # 1518-108IM-DG-7004-00 PSRS# 26874

NO.	DATE	DESCRIPTION	GM/SPEC	DWN	CHKD	SUPV	APVD BY
1	06-26-12	ISSUE FOR CONSTRUCTION	30915268				

REVISIONS

APPROVED BY: JN 30915268; SUPV; DSGN; DWN; CHKD; OK; DATE 05-03-12; SCALES AS NOTED

PIPING - SECTIONS & DETAILS
INSTALL 1,509' OF 24" PIPE
L-108 REPLACEMENT
MP 39.17 - MP 39.47
SAN JOAQUIN COUNTY
PACIFIC GAS AND ELECTRIC COMPANY
WALNUT CREEK, CALIFORNIA

MICROFILM
BILL OF MATL SHEET 5 OF 8
DWG LIST
SUPSDS
SUPSD BY
SHEET NO. 6 OF 8 SHEETS
30915268 1

PS-12-01646

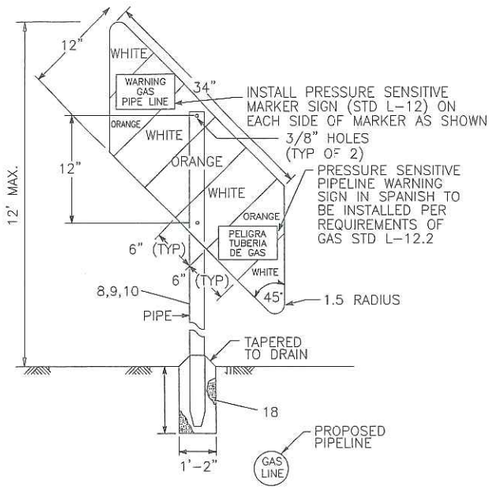

DETAIL D — LINE MARKERS–VARIOUS SHEETS
NO SCALE

LINE MARKER LOCATION
STA. 0+00
STA. 1+95
STA. 2+56
STA. 15+07

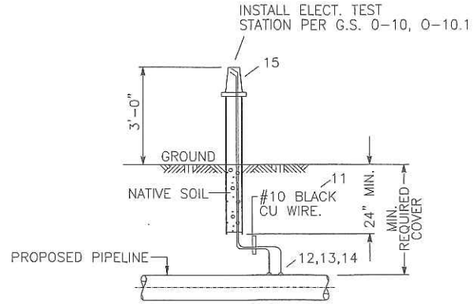

DETAIL 8 — ELECTROLYSIS TEST STATION
NO SCALE
WITH REMOTE MONITORING
GAS STD 0-10, 0-10.1
0-10.2 & UPDATES

NOTES:
PAVED AREAS–TERMINATE WIRES IN STEEL VALVE BOX W/COVER.

ETS LOCATION
STA. 2+56
STA. 15+07

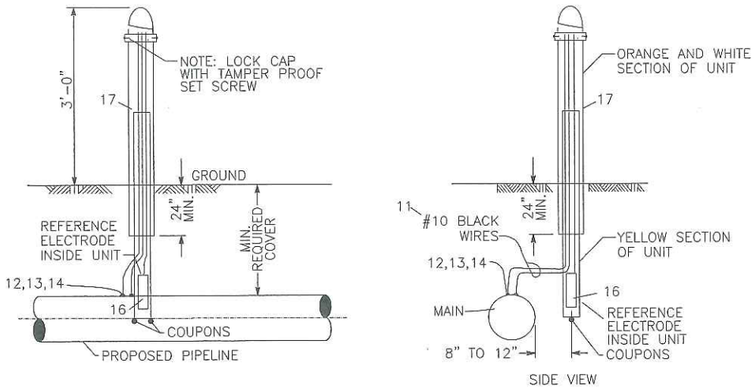

DETAIL 9 — COUPON AUTOMATED TEST STATION
NO SCALE
WITH REMOTE MONITORING
GAS STD 0-10, 0-10.1
0-10.2 & UPDATES

NOTES:
1. MONITOR CATS OMNIMETRIX # 504RMFFP10 (PG&E CODE M233259)
2. INSTALL ABOVE GROUND POST NEXT TO P/L MARKER OR POWER POLE OUTSIDE OF DRIVING LANE.
3. COUPONS SHALL BE INSTALLED TO THE DEPTH OF THE CENTERLINE OF THE PIPELINE.
4. COUPONS SHALL BE INSTALLED SUCH THAT EACH COUPON IS EQUIDISTANT FROM THE PIPE.
5. BACKFILL WITHIN 1'-6" (RADIUS) OF THE COUPONS MUST BE NATIVE SOIL COMPACTED TO MINIMUM 95% COMPACTION.

CATS LOCATION
STA. 0+00

SAFETY

SAFETY PLEDGE

I ALWAYS PUT SAFETY FIRST.
I LOOK FOR AND ACT TO RESOLVE UNSAFE SITUATIONS.
I HELP AND ENCOURAGE OTHERS TO ACT SAFELY.

PG&E

REGISTERED PROFESSIONAL ENGINEER — FRANKLIN PAUL RYAN — No. C25717 Exp. 12-31-13 — CIVIL — STATE OF CALIFORNIA

GIE # 1518-108IM-DG-7004-00 PSRS# 26874

NO.	DATE	DESCRIPTION	GM/SPEC	DWN	CHKD	SUPV	APVD BY
1	06-26-12	ISSUE FOR CONSTRUCTION	30915268				

REVISIONS

APPROVED BY	
JN	30915268
SUPV	
DSGN	
DWN	
CHKD	
OK	
DATE	05-03-12
SCALES	AS NOTED

PIPING - SECTIONS & DETAILS
INSTALL 1,509' OF 24" PIPE
L-108 REPLACEMENT
MP 39.17 - MP 39.47
SAN JOAQUIN COUNTY
PACIFIC GAS AND ELECTRIC COMPANY
WALNUT CREEK, CALIFORNIA

MICROFILM
BILL OF MATL SHEET 5 OF 8
DWG LIST
SUPSDS
SUPSD BY
SHEET NO. 7 OF 8 SHEETS
30915268 1

PS-12-01646

BTU AREA: X-05
CP AREA: T-108-C
WALL MAP: 2869H1
SAN JOAQUIN COUNTY
CITY OF STOCKTON

L-108 DEACTIVATION MP 39.17 - MP 39.47
SAN JOAQUIN COUNTY

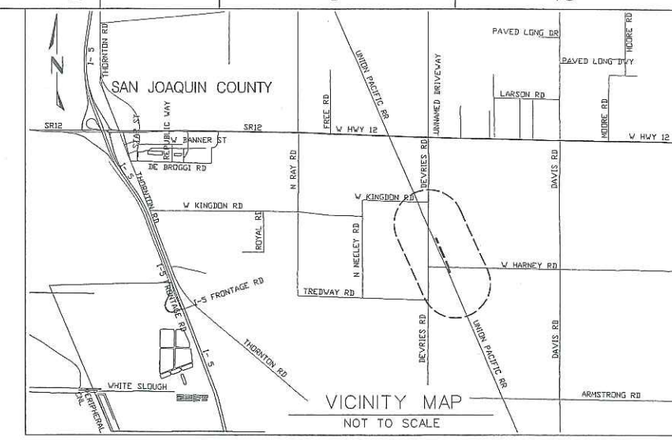

VICINITY MAP
NOT TO SCALE

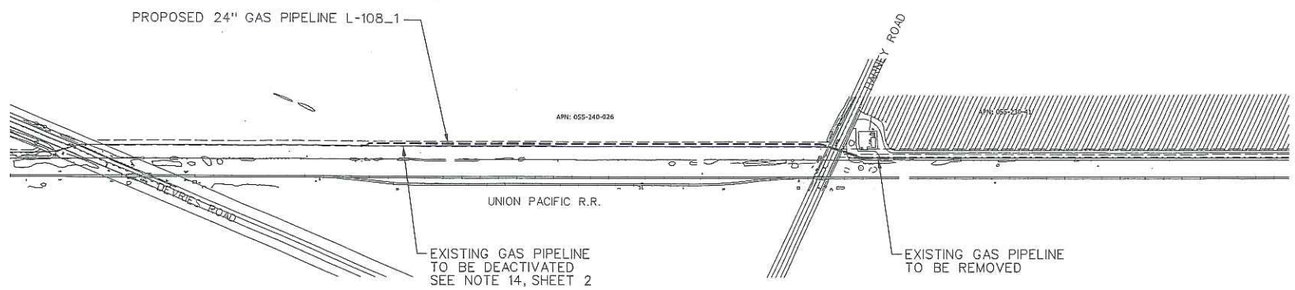

SAFETY

SAFETY PLEDGE

I ALWAYS PUT SAFETY FIRST.
I LOOK FOR AND ACT TO
RESOLVE UNSAFE SITUATIONS.
I HELP AND ENCOURAGE
OTHERS TO ACT SAFELY.

REFERENCE DRAWINGS:

385160 --------OPERATING MAP

LEGEND:

— — — —	PROPOSED GAS LINE	⊛	CITY/COUNTY MON
—G/L—	EXISTING GAS LINE	⊙	AS NOTED
—E—	ELECTRIC LINE	×-×-×-×	FENCE
—T—	TELEPHONE LINE	Ⓔ	ETS
----------	BOUNDARY LINE		
	TIE-IN WELD		CABLE TV BOX
	EXISTING TOWER		COMM VAULT
	ELECTRIC VAULT	-EP-	EDGE OF PAVEMENT
	GAS LINE MARKER	-FC-	FACE OF CURB
	GAS VALVE	-SD-	STORM LINE
	WATER VALVE	-SS-	SEWER LINE
	TREE	-GS-	GAS SERVICE LINE
	TEL VAULT	-W-	WATER LINE
	STORM DRAIN		
	SEWER MANHOLE		

GIE # 1518-1081M-DC-7005-00 PSRS# 26874

NO.	DATE	DESCRIPTION	GM/SPEC	DWN	CHKD	SUPV	APVD BY
1	06-26-12	ISSUE FOR CONSTRUCTION	30915268				

REVISIONS

APPROVED BY
LIN 30915268
SUPV
DSGN
DWN
CHKD
OK
DATE 05-03-12
SCALES NONE

DEACTIVATION SHEET
INSTALL 1,509' OF 24" PIPE
L-108 REPLACEMENT
MP 39.17 - MP 39.47
SAN JOAQUIN COUNTY
PACIFIC GAS AND ELECTRIC COMPANY
WALNUT CREEK, CALIFORNIA

MICROFILM
BILL OF MATL SHEET 5 OF 8
DWG LIST
SUPSDS
SUPSD BY
SHEET NO. 8 OF 8 SHEETS

30915268 | 1

PS-12-01646