CP AREA # T-197-A
WALL MAP 2868, 2869
PLAT B1 – B8
SAN JOAQUIN COUNTY

HYDROTEST TIM-169-12
DFM-197B, MP 0.00 – 4.467

EXPENSE ORDER # 41656204
CAPITAL ORDER # 30923303

SCHEDULE OF SHEETS

SHEET 1 – – GENERAL / CONSTRUCTION NOTES
SHEET 2 – – HYDROTEST PLAN VIEW / TEST LOCATIONS
SHEET 3 – – TAP LOCATIONS [1/2]
SHEET 4 – – TAP LOCATIONS [2/2]
SHEET 5 – – HYDROTEST PROFILE VIEW / PIPELINE FEATURES
SHEET 6 – – CONSTRUCTION DETAILS [1/2]
SHEET 7 – – CONSTRUCTION DETAILS [2/2]
SHEET 8 – – MATERIAL OF RECORD / BILL OF MATERIALS

WOODBRIDGE, CA

VICINITY SKETCH
NOT TO SCALE

SUMMARY OF PROPOSED WORK:

1. HYDROSTATICALLY TEST 6" LINE 197B FROM MP 0.00 TO MP 4.467 PER DRAWINGS AND STRENGTH TEST PRESSURE REPORTS (#41656204) AND MATERIAL OF RECORD DRAWING #41656204 SHEET 8 OF 8.

EXPENSE ORDER # 41656204

1. INSTALL 14' OF 6.625"OD x 0.280"WT, API 5L, GR B, SMLS, BARE PIPE.
2. REMOVE 8' OF 6.625"OD x 0.188"WT, 30,000 SMYS, ERW, PIPE INSTALLED ON GM 66400 (1941).
3. REMOVE 6' OF 6.625"OD x 0.250"WT, API 5L, GR B, ERW PIPE INSTALLED ON GM 135396 (1956).

CAPITAL ORDER # 30923303

1. INSTALL 53' OF 6.625"OD x 0.280"WT, API 5L, GR B, SMLS, BARE PIPE.
2. INSTALL 6'-6" OF 3.500"OD x 0.216"WT, API 5L, GR B, SMLS, BARE PIPE.
3. INSTALL 26' OF 1.050"OD x 0.154"WT, API 5L, GR B, SMLS PIPE.
4. INSTALL 2 EA. 6" ANSI 300 BALL VALVES, FIG 3, ENDS TO MATCH 6.625"OD x 0.280"WT, API 5L, X-42 PIPE.
5. INSTALL 1 EA. 6" ANSI 300 BALL VALVE, FIG 1, ENDS TO MATCH 6.625"OD x 0.280"WT, API 5L, X-42 PIPE.
6. INSTALL 1 EA. 3" ANSI 300 BALL VALVE, WE X FE.
7. REMOVE 35' OF 6.625"OD x 0.188"WT, 30,000 SMYS PIPE INSTALLED ON GM 66400 (1941).
8. REMOVE 7' OF 6.625"OD x 0.250"WT, API 5L, GR B, ERW PIPE INSTALLED ON GM 135396 (1956).
9. REMOVE 13' OF 6.625"OD x 0.188"WT, API 5L, X-42, ERW PIPE INSTALLED ON GM 4801692 (1989).
10. REMOVE 3' OF 6.625"OD x 0.250"WT, API 5L, GR B, SMLS PIPE INSTALLED ON GM 4509162 (1985).
11. REMOVE 4'-10" OF 3.500"OD x 0.216"WT, API 5L, GR B, ERW PIPE INSTALLED ON GM 135396 (1956).
12. REMOVE 1 EA. 6" ANSI 300 PLUG VALVE, INSTALLED ON GM 135396 (1956).
13. REMOVE 1 EA. 3" ANSI 300 PLUG VALVE, INSTALLED ON GM 135396 (1956).
14. REMOVE 1 EA. 6" PRESSURE CONTROL FITTING, INSTALLED ON GM 135396 (1956).
15. REMOVE 1 EA. 6" PRESSURE CONTROL FITTING, INSTALLED ON GM 4801692 (1989).
16. REMOVE 1 EA. 6" BOTTOM TAP PRESSURE CONTROL FITTING, INSTALLED ON GM 4509162 (1985).

SEQUENCE OF OPERATIONS:

1. PRIOR TO TAKING PIPELINE CLEARANCE THE FOLLOWING MUST BE PERFORMED:
   A. PG&E T&R TO CHECK ANY DRIPS IN SHUT-IN SEGMENT FOR PRESENCE OF PIPELINE LIQUIDS.
   B. CONTRACTOR TO REMOVE 2' OF PIPE WRAP AT EACH END OF CUT OUT SECTIONS AND SANDBLAST TO NEAR WHITE WHERE DESIGNATED ON DRAWINGS FOR H-FORM INSPECTION.
   C. H-FORM INSPECTION TO BE PERFORMED ON PIPELINE BY PG&E APPROVED VENDOR. PERFORM H-FORM INSPECTION PRIOR TO REMOVAL OF CUT-OUT SECTION.
   D. PERFORM H-FORM INSPECTION AS DESIGNATED ON DRAWINGS. IF UT W.T. MEASUREMENTS IN SECTION 2.5 DO NOT MATCH EXISTING PIPE SPECIFICATIONS AS SHOWN ON DRAWINGS, IMMEDIATELY NOTIFY ENGINEER.
   E. COMPLETE A-FORMS ON ALL EXPOSED PIPE AND INCLUDE IN AS-BUILT PACKAGE.
   F. G.C. GAS TO INSTALL SAVE-A-VALVES FOR OIL TESTING AND SNIFF HOLES WHERE DESIGNATED IN THE TIE-IN PROCEDURE. G.C. GAS FOREMAN TO CONFIRM LOCATION AND NUMBER OF SAVE-A-VALVE LOCATIONS AND ENSURE WELD PRESSURE CALCULATIONS ARE PROVIDED BY ENGINEERING PRIOR TO WELDING SAVE-A-VALVES ON PIPELINE.
2. AFTER CLEARANCE CONTRACTOR TO TRANSPORT 3' OF EACH H-FORM TESTED PIPE SEGMENT TO 2000 CROWS LANDING RD., MODESTO. UTILIZE CHAIN OF CUSTODY PROCESS FOR ALL SHIPMENTS.
3. UPON ARRIVAL AT MODESTO, ATS TO PERFORM FURTHER TESTING AND ANALYSIS OF CUT-OUT SECTIONS.
4. SEE TIM-169-12 HYDROSTATIC TEST PLAN FOR SEQUENCING OF HYDROSTATIC TEST TASKS.

CONSTRUCTION NOTES:

1. WELDING REQUIREMENTS:
   ALL ARC WELDING IS TO BE PERFORMED IN ACCORDANCE WITH GAS STANDARD D-22.
2. HYDROSTATIC TEST REQUIREMENTS:
   HYDROSTATIC TESTING SHALL MEET PRESSURE AND DURATION REQUIREMENTS OF GAS STANDARD A-34 AND SHALL BE CONDUCTED IN ACCORDANCE WITH GAS STANDARD A-37. SEE ATTACHED STPR AND SITE SPECIFIC TEST PROCEDURE.
3. PAINTING AND COATING REQUIREMENTS:
   ALL EXPOSED PIPE AND FITTINGS ARE TO BE PAINTED IN ACCORDANCE WITH GAS STANDARD E-30. ALL COATING ON BURIED PIPE AND FITTINGS ARE TO BE APPLIED IN ACCORDANCE WITH GAS STANDARD E-35. FOR COATING SELECTIONS ON BURIED PIPE SEE DIRECT BURIAL SELECTIONS TABLE.
4. CALL USA AT LEAST TWO WORKING DAYS PRIOR TO EXCAVATION (811).
5. LOCATION OF EXISTING SUBSTRUCTURES ARE APPROXIMATE. BEFORE POWER OR HEAVY EQUIPMENT IS USED FOR EXCAVATION, THE EXACT DEPTH AND LOCATION OF SUBSTRUCTURES SHALL FIRST BE DETERMINED BY HAND EXCAVATION, IF NECESSARY.
6. ALL BENDS ARE SMOOTH FIELD BENDS EXCEPT WHERE ELBOWS ARE NOTED. FIELD BEND SHALL BE MADE IN ACCORDANCE WITH GAS STANDARD A-36 SECTION 4-D.
7. ALL ANGLES SHOWN IN THE PLAN AND PROFILE ARE APPROXIMATE AND SHALL BE CUT TO SUIT FIELD CONDITION.
8. THIS PIPELINE MUST BE INSTALLED WITH AT LEAST 12 INCHES OF CLEARANCE FROM ANY OTHER UNDERGROUND STRUCTURE NOT ASSOCIATED WITH THE PIPELINE.
9. COATING REMOVAL:
   BEFORE REMOVING THE PIPE COATING ON PRE-1972 PIPE (DOES NOT INCLUDE PLASTIC TAPE OR FUSION BONDED EPOXY COATINGS) THE FOLLOWING STEPS SHALL BE TAKEN:
   -FOR ALL NON-EMERGENCY WORK, PRE-1972 PIPE WRAP MUST BE EVALUATED TO DETERMINE IF IT CONTAINS ASBESTOS PRIOR TO REMOVAL.
   -FOR EMERGENCY WORK ON PRE-1972 PIPE, ASSUME THE WRAP CONTAINS > 1% ASBESTOS UNTIL THE WRAP CAN BE TESTED.
   -OBTAIN SAMPLES OF THE WRAP, AND HAVE SAMPLES TESTED FOR ASBESTOS IN ACCORDANCE WITH RP 4711.
   -TEST RESULTS ARE TO BE INCLUDED WITH AS-BUILTS.
   -FOLLOW PROCEDURE IN RP 4711 FOR REMOVAL OF PIPE WRAP.
10. BONDING CABLES TO BE INSTALLED ACROSS PIPELINE CUT-OUTS AT ALL LOCATIONS THE PIPELINE IS SEVERED TO INSTALL TEST HEADS PRIOR TO REMOVAL. CHAIN CLAMPS, MAGNETIC CLAMPS, OR OTHER CONSTRUCTION MANAGEMENT APPROVED CLAMPS AND #6 (MIN.) STRANDED COPPER CABLE SHALL BE UTILIZED.
11. ALL BALL VALVES USED FOR TAPS IN HYDROTEST SECTION ARE TO BE CLOSED 50% FROM FULL OPEN POSITION PRIOR TO FILL AND FOR DURATION OF HYDROTEST. ALL PLUG VALVES USED FOR TAPS/BLOWOFFS IN HYDROTEST SECTION ARE TO BE IN FULL OPEN POSITION PRIOR TO FILL AND FOR DURATION OF HYDROTEST UNLESS SPECIFICALLY CALLED OUT TO BE IN CLOSED POSITION ON DRAWING.
12. ALL EXCAVATIONS WITHIN EXISTING STATIONS SHALL BE HAND DUG OR EXCAVATED USING SOFT DIG METHODS (e.g. VACUUM EXCAVATIONS OR SIMILAR).
13. COPIES OF REFERENCE DRAWINGS ARE AVAILABLE TO FIELD PERSONNEL (PG&E, INSPECTION OR CONTRACTOR) ON AN AS NEEDED BASIS. CONTACT THE ASSIGNED ENGINEER IDENTIFIED IN CONTACTS TO OBTAIN COPIES OF ANY REFERENCE DRAWINGS.

GENERAL NOTES:

1. THIS DRAWING HAS BEEN CREATED BY REVIEW OF THE AS-BUILT DRAWINGS & RECORDS. ACCURACY IS DEPENDENT UPON THE SOURCE DOCUMENTS LISTED ON THE REFERENCE DRAWINGS.
2. "R" STATIONING ON THIS DRAWING DENOTES "REFERENCE" STATIONING AND IS A RESULT OF PG&E GIS SHAPEFILE OVERLAID UPON GOOGLE EARTH IMAGERY AND MIGHT NOT ACCURATELY DEPICT EXACT DISTANCES. FIELD VERIFY ALL DISTANCES.
3. DISTANCES TO ALL UTILITIES SHOWN ON DRAWING ARE APPROXIMATE BASED UPON REVIEW OF PG&E & OTHER UTILITY/AGENCY DRAWINGS & AS-BUILTS. CONTRACTOR TO CALL USA TO HAVE LOCATION OF THESE FACILITIES MARKED AND POTHOLE TO EXPOSE/VERIFY LOCATION.

UNDERGROUND SERVICE ALERT USA CALL BEFORE YOU DIG.
CALL: 811

CONTACT INFORMATION:

CONSTRUCTION MANAGER --------- WILLARD CHEIRRETT (208) 540-1770
T&R SUPERVISOR ---------- DARIN JONES (916) 408-3299
CLEARANCE SUPERVISOR ---------- GARY KRAHMER (209) 932-6555
PROJECT COORDINATOR ---------- JOSH KIRTLEY (510) 230-3069
LEAD ENGINEER ---------- JOEL PASILLAS (530) 646-5275
ENGINEER ---------- CHRIS GAMBETTI (916) 517-8088
CORROSION ENGINEER ---------- JONATHAN RIGOTTI (530) 902-0147
H-FORM ---------- ANDRE FILIATRAULT, GE (832) 457-1252
MATERIALS (PIPE) ---------- MICHAEL LACHINA (510) 468-1924
MATERIALS (FITTINGS) ---------- MICHAEL DE HART (209) 728-4603
MATERIALS CHAIN OF CUSTODY -------- MICHAEL PAINTER (209) 275-7241

DESIGN & CONSTRUCTION REVIEW FOR INTERNAL CORROSION			
DESCRIPTION	ACTION SELECTED	INITIAL	DATE
CORROSION ENGINEER HAS REVIEWED THIS LOCATION AND THERE IS NO KNOWN THREAT OF INTERNAL CORROSION. NO INTERNAL CORROSION DESIGN OR CONSTRUCTION CONSIDERATIONS ARE NECESSARY.			
INTERNAL CORROSION MAY BE A THREAT AND THE CONSTRUCTION DESIGNS HAVE BEEN REVIEWED WITH CORROSION ENGINEERING. DOCUMENTATION OF THE REVIEW AND ACTIONS TAKEN ARE IN THE JOB PACKAGE AND INCORPORATED IN THIS DESIGN.			

CONTRACTOR

WELDING INSPECTED PER PG&E GAS STANDARD D-40
VISUAL _____ ☐
MAGNETIC PARTICLE _____ ☐
INSPECTOR _____
DATE _____

G.C. GAS

WELDING INSPECTED PER PG&E GAS STANDARD D-40
VISUAL _____ ☐
MAGNETIC PARTICLE _____ ☐
INSPECTOR _____
DATE _____

NOTIFIED U.S.A.
DATE
TICKET NUMBER
BY

Installation Tested or Inspected and Noted on Drawing. All Levels Satisfactory per PG&E GS&S D-16
Qualified Employee _____ Date _____
Corrosion mechanic's signature is required when a CPA boundary is within the scope of the project

DIRECT BURIAL COATING SELECTIONS
LISTED IN ORDER OF PREFERENCE

MAIN LINE COATING	FBE
MINOR REPAIRS	PROTAL 7200, POWERCRETE J, DEVGRIP 238
TIE-IN WELDS	PROTAL 7200, POWERCRETE J, DEVGRIP 238
GIRTH WELDS	PROTAL 7200, POWERCRETE J, DEVGRIP 238
BUTT WELDED FITTINGS	PROTAL 7200, POWERCRETE J, DEVGRIP 238
VALVE ASSEMBLIES	DEVGRIP 238
SHORT SEGMENTS OF PIPE	PROTAL 7200, POWERCRETE J, DEVGRIP 238
AIR-TO-SOIL TRANSITIONS	DEVGRIP 238, POWERCRETE J
PRESSURE CONTROL BODY FITTINGS	PROTAL 7200 FLANGE WAX TAPE
TIE-INS/COATING TRANSITIONS	PROTAL 7200, WAXTAPE, POLYKEN TAPE

BORED COATING SELECTIONS
LISTED IN ORDER OF PREFERENCE

MAIN LINE COATING	ARC APPLIED OVER FBE
MINOR REPAIRS	PROTAL 7200, POWERCRETE J
GIRTH WELDS	PROTAL 7200, POWERCRETE J

NOTES:

1) CONTACT THE RESPONSIBLE PIPELINE ENGINEER TO REQUEST A VARIANCE FROM THE ABOVE COATING SELECTIONS
2) ALL COATINGS ARE TO BE APPLIED IN ACCORDANCE WITH GS&S E-30 AND E-35

REFERENCE DRAWINGS:

385163	–	OPERATING MAP– LAS VINAS STATION TO CALAVERAS CEMENT L-197 CHNG 44
283644	–	OPERATING DIAGRAM– LAS VINAS STATION REV 42
381974	–	6" H.P. GAS TRANS. LINE NO. 197 (SHT 1-6)
30847265	–	TRANSFER (7) GAS SERVICES
30847261	–	TRANSFER (17) GAS SERVICES (SHT 1-3)
0731G91535	–	LOWER BY REPLACEMENT 6" L- 197B
30847260	–	RETIRE HPR

SAFETY
SAFETY PLEDGE
I ALWAYS PUT SAFETY FIRST.
I LOOK FOR AND ACT TO RESOLVE UNSAFE SITUATIONS.
I HELP AND ENCOURAGE OTHERS TO ACT SAFELY.

COPY

ISSUED FOR BID
NOT
APPROVED FOR CONSTRUCTION

EXPENSE PSRS# 26623
CAPITAL PSRS# 27265

NO.	DATE	DESCRIPTION	GM/SPEC	DWN	CHKD	SUPV	APVD BY
0	6/19/12	ISSUED FOR BID	41656204	DCB	CRG	JP	MAC

REVISIONS

APPROVED BY	
GM	41656204
SUPV	
DSGN	
DWN	DCB
CHKD	CRG
OK	JP
DATE	
SCALES	AS SHOWN

HYDROTEST TIM-169-12
L-197B
MP 0.00 – 4.467
WOODBRIDGE, CALIFORNIA

PACIFIC GAS AND ELECTRIC COMPANY
WALNUT CREEK, CALIFORNIA

MICROFILM
BILL OF MATL SHEET 08
DWG LIST
SUPSDS
SUPSD BY
SHEET NO. 01 OF 08 SHEETS

41656204 | 0

PS-1201746 \8

PLAN VIEW
(SCALE: 1" = 1000')

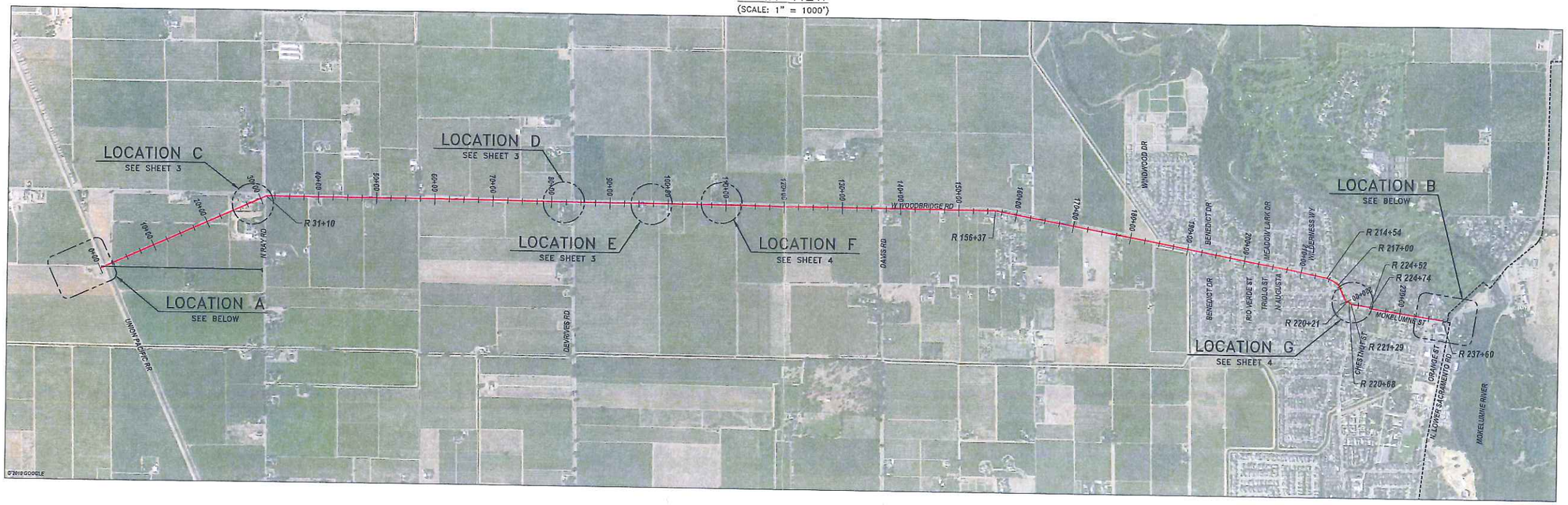

ESTIMATED GALLONS OF WATER
REQUIRED LOCATION A TO B TEST:
37,815 GALLONS.

LOCATION A
LAS VINAS STATION
WALL MAP – 2868; PLAT – B6; BLOCK – ; MP – 0.00
(SCALE: 1" = 60')

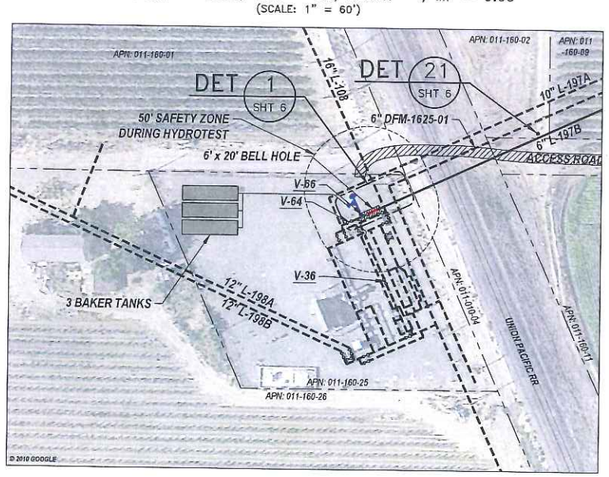

LOCATION B
MOKELUMNE ST & LOWER SAC. RD.
WALL MAP – 2869; PLAT – B8; BLOCK – 8; MP – 4.63
(SCALE: 1" = 80')

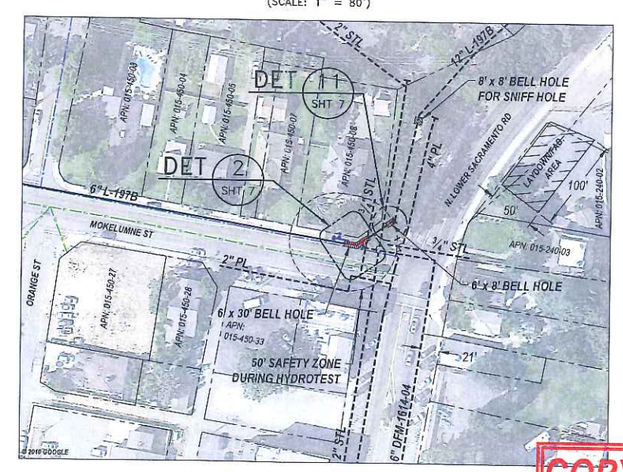

SAFETY

SAFETY PLEDGE

I ALWAYS PUT SAFETY FIRST.
I LOOK FOR AND ACT TO
RESOLVE UNSAFE SITUATIONS.
I HELP AND ENCOURAGE
OTHERS TO ACT SAFELY.

COPY

ISSUED
FOR BID
NOT
APPROVED FOR
CONSTRUCTION

UNDERGROUND SERVICE ALERT
USA
CALL BEFORE YOU DIG
CALL: 811

NO.	DATE	DESCRIPTION	GM/SPEC	DWN	CHKD	SUPV	APVD BY
0	6/19/12	ISSUED FOR BID	41656204	DCB	CRG	JP	MAC

REVISIONS

APPROVED BY: GM 41656204
SUPV
DSGN
DWN DCB
CHKD CRG
OK JP
DATE
SCALES AS SHOWN

HYDROTEST TIM–169–12
L–197B
MP 0.00 – 4.467
WOODBRIDGE, CALIFORNIA

PACIFIC GAS AND ELECTRIC COMPANY
WALNUT CREEK, CALIFORNIA

MICROFILM
BILL OF MATL SHEET 08
DWG LIST
SUPSDS
SUPSD BY
SHEET NO. 02 OF 08 SHEETS
41656204 0

LOCATION C

W. WOODBRIDGE RD. & N. RAY RD.
WALL MAP – 2868; PLAT – B7; BLOCK – N/A; MP – 0.5441
(SCALE: 1" = 100')

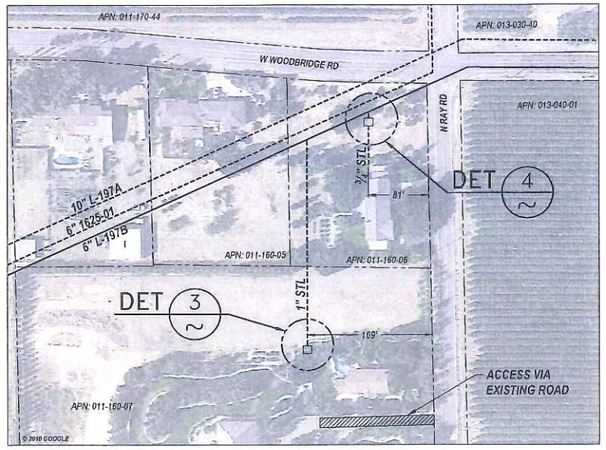

LOCATION D

W. WOODBRIDGE RD. & DEVRIES RD.
WALL MAP – 2869; PLAT – B2; BLOCK – N/A; MP – 0.5937
(SCALE: 1" = 100')

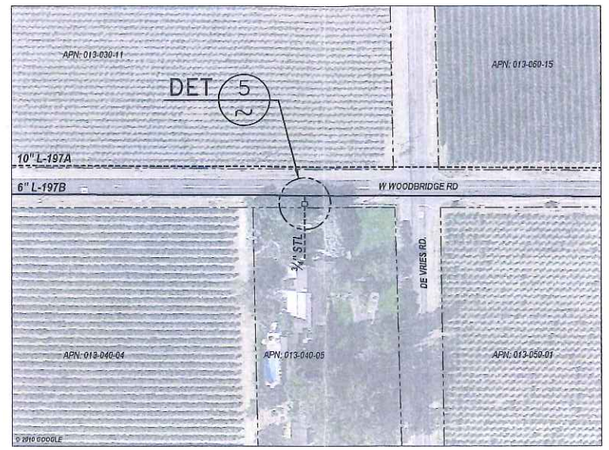

LOCATION E

W. WOODBRIDGE RD. & DEVRIES RD.
WALL MAP – 2869; PLAT – B2; BLOCK – N/A; MP – 0.5937
(SCALE: 1" = 100')

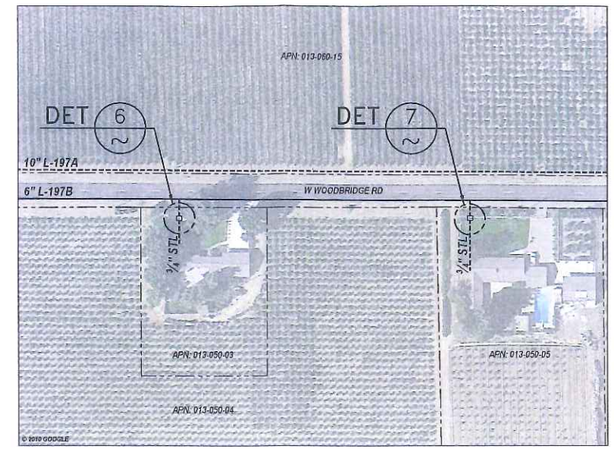

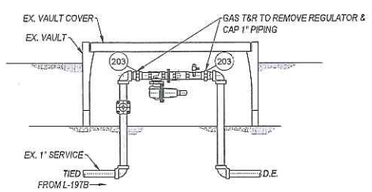

DETAIL 3 NOT TO SCALE — ISOLATE HPR FOR HYDROTEST
LOCATION C – W. WOODBRIDGE RD

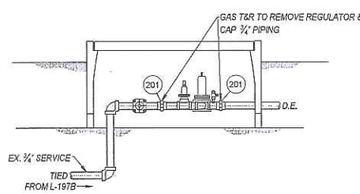

DETAIL 4 NOT TO SCALE — ISOLATE HPR FOR HYDROTEST
LOCATION C – W. WOODBRIDGE RD

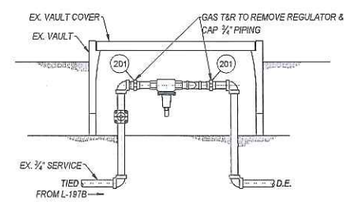

DETAIL 5 NOT TO SCALE — ISOLATE HPR FOR HYDROTEST
LOCATION D – W WOODBRIDGE & DE VRIES RD

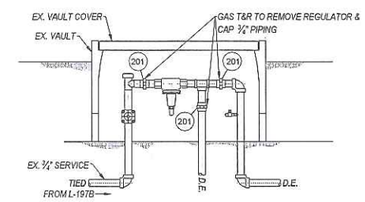

DETAIL 6 NOT TO SCALE — ISOLATE HPR FOR HYDROTEST
LOCATION E – 2688 W WOODBRIDGE E/O DE VRIES RD

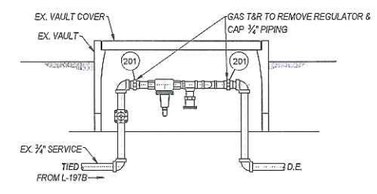

DETAIL 7 NOT TO SCALE — ISOLATE HPR FOR HYDROTEST
LOCATION E – 2688 W WOODBRIDGE E/O DE VRIES RD

SAFETY

SAFETY PLEDGE

I ALWAYS PUT SAFETY FIRST.
I LOOK FOR AND ACT TO RESOLVE UNSAFE SITUATIONS.
I HELP AND ENCOURAGE OTHERS TO ACT SAFELY.

ISSUED FOR BID
NOT APPROVED FOR CONSTRUCTION

COPY

UNDERGROUND SERVICE ALERT USA
CALL BEFORE YOU DIG.
CALL: 811

NO.	DATE	DESCRIPTION	GM/SPEC	DWN	CHKD	SUPV	APVD BY
0	6/19/12	ISSUED FOR BID	41656204	DCB	CRG	JP	MAC

REVISIONS

APPROVED BY: GM 41656204; SUPV; DSGN; DWN DCB; CHKD CRG; OK JP; DATE; SCALES AS SHOWN

HYDROTEST TIM–169–12
L–197B
MP 0.00 – 4.467
WOODBRIDGE, CALIFORNIA

PACIFIC GAS AND ELECTRIC COMPANY
WALNUT CREEK, CALIFORNIA

MICROFILM
BILL OF MATL SHEET 08
DWG LIST
SUPSDS
SUPSD BY
SHEET NO. 03 OF 08 SHEETS
41656204 0

LOCATION F

2297 W. WOODBRIDGE RD.

WALL MAP – 2869; PLAT – B2; BLOCK – N/A; MP – 2.0714

(SCALE: 1" = 80')

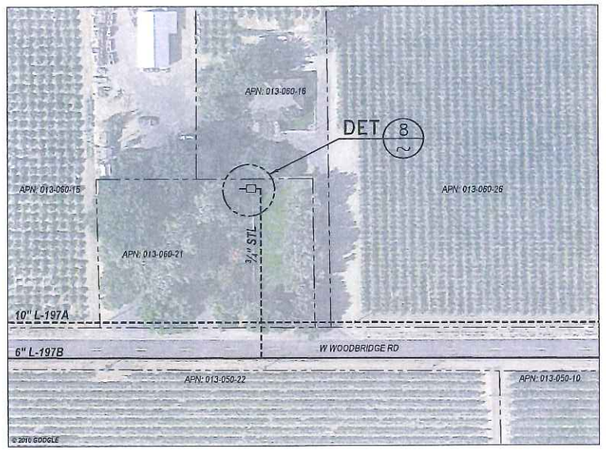

LOCATION G

MOKELUMNE ST. & CHESTNUT ST.

DETAIL 9: WALL MAP – 2869; PLAT – B7; BLOCK – 47,18; MP – 4.0594

DETAIL 10: WALL MAP – 2869; PLAT – B7; BLOCK – 13,14; MP – 4.2082

(SCALE: 1" = 80')

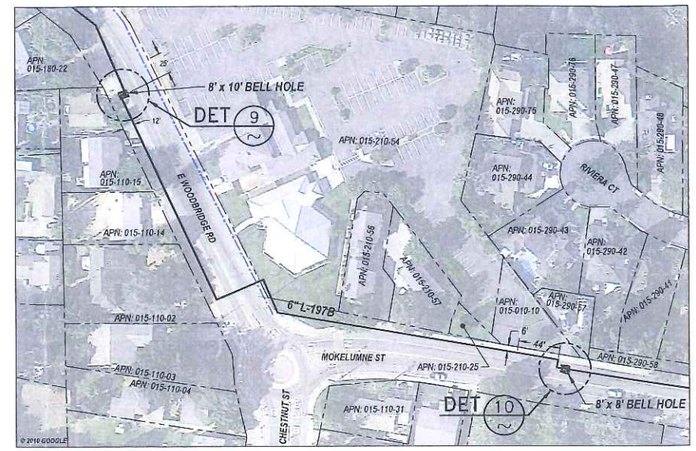

ALL WORK AT LOCATION G TO BE CHARGED TO CAPITAL ORDER #30923303

JOB NO. 30923303
BOM # 101

DESIGN CRITERIA

LOCATION CLASS 3
DESIGN FACTOR 0.5
FDP 720 PSIG 24.34 % SMYS
MAOP 500 PSIG 16.90 % SMYS
STRENGTH TEST PRESSURE
MAX. 950 PSIG 32.11 % SMYS
MIN. 850 PSIG 28.73 % SMYS
2663 PSIG=90% SMYS
TEST MEDIUM WATER
PIPE SPEC API 5L GR B. SMLS
O.D. 6.625"
W.T. 0.280"
WELD INSPECTION (GAS STD.D-40)*
☒RADIOGRAPHIC:
☐20% MIN. (% OF EACH WELDER'S DAILY WORK)
☒100%
*VISUALLY INSPECT 100% OF ALL WELDS THAT ARE NOT RADIOGRAPHICALLY INSPECTED. (THIS REQUIREMENT APPLIES EVEN IF NO RADIOGRAPHIC INSPECTION IS REQUIRED.)

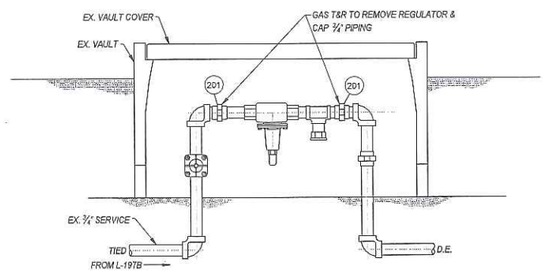

DETAIL 8 2 — ISOLATE HPR FOR HYDROTEST
NOT TO SCALE — LOCATION F – 2297 W WOODBRIDGE RD

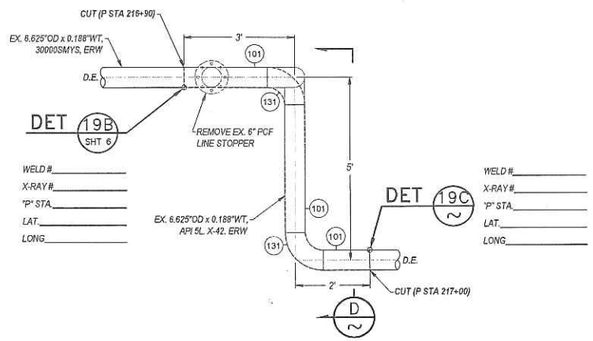

DETAIL 9 2 — REMOVE 6" PCF
SCALE: 1/2" = 1'-0" — LOCATION G – E. WOODBRIDGE RD.

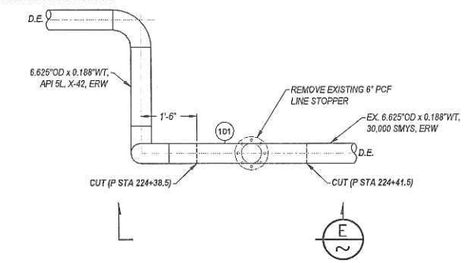

DETAIL 10 2 — REMOVE 6" PCF
SCALE: 1/2" = 1'-0" — LOCATION G – MOKELUMNE ST & CHESTNUT ST

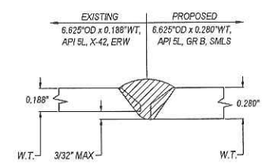

DETAIL 19C 2 — GS&S D-22 FIG. 2
NOT TO SCALE

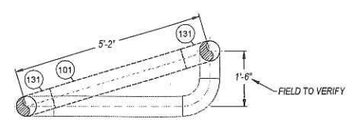

ELEVATION D 2
SCALE: 1/2" = 1'-0"

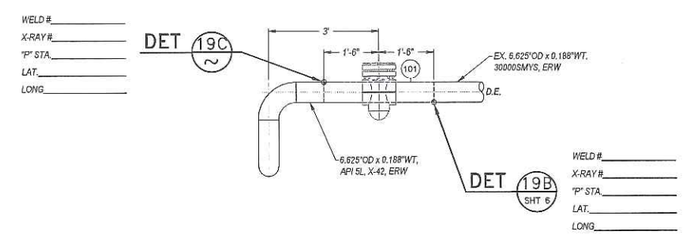

ELEVATION E 2
SCALE: 1/2" = 1'-0"

GM 66400 (1941)
EXIST PIPE SPECS
HEADER SIZE: 6.625"
PIPE SPECS: 30,000 SMYS, ERW
WALL THICKNESS: 0.188"
PRESENT MAOP: 388 PSIG
% SMYS @ MAOP: 22.79
MAXIMUM ALLOWABLE PRESSURE DURING WELDING (G.S.&S. D-22)
EVALUATE THE FOLLOWING OPERATING PRESSURE LIMITATIONS TO DETERMINE THE MAXIMUM OPERATING PRESSURE PERMITTED DURING WELDING
A) (388 PSIG) WHEN WELDING ON BODY OF THE PIPE UNLESS.
B) (340 PSIG) WHEN WELDING WITHIN 3" OF THE LONGITUDINAL SEAM (EXCEPT SEAM PIPE), THE CIRCUMFERENTIAL AND ANY BRANCH WELDS OR WITHIN LAMINATIONS, ETC.) IN THE PIPE WHICH EXCEEDS 1/3 OF THE NOMINAL WALL THICKNESS IN DEPTH AND/OR 1/4 OF THE NOMINAL PIPE DIAMETER IN LENGTH.

GM 4801692 (1989)
EXIST PIPE SPECS
HEADER SIZE: 6.625"
PIPE SPECS: API 5L, X-42, ERW
WALL THICKNESS: 0.188"
PRESENT MAOP: 388 PSIG
% SMYS @ MAOP: 16.28
MAXIMUM ALLOWABLE PRESSURE DURING WELDING (G.S.&S. D-22)
EVALUATE THE FOLLOWING OPERATING PRESSURE LIMITATIONS TO DETERMINE THE MAXIMUM OPERATING PRESSURE PERMITTED DURING WELDING
A) (388 PSIG) WHEN WELDING ON BODY OF THE PIPE UNLESS.
B) (388 PSIG) WHEN WELDING WITHIN 3" OF THE LONGITUDINAL SEAM (EXCEPT SEAM PIPE), THE CIRCUMFERENTIAL AND ANY BRANCH WELDS OR WITHIN LAMINATIONS, ETC.) IN THE PIPE WHICH EXCEEDS 1/3 OF THE NOMINAL WALL THICKNESS IN DEPTH AND/OR 1/4 OF THE NOMINAL PIPE DIAMETER IN LENGTH.

SAFETY

SAFETY PLEDGE

I ALWAYS PUT SAFETY FIRST.
I LOOK FOR AND ACT TO RESOLVE UNSAFE SITUATIONS.
I HELP AND ENCOURAGE OTHERS TO ACT SAFELY.

ISSUED FOR BID
NOT
APPROVED FOR CONSTRUCTION

COPY

UNDERGROUND SERVICE ALERT USA — CALL BEFORE YOU DIG — CALL: 811

NO.	DATE	DESCRIPTION	GM/SPEC	DWN	CHKD	SUPV	APVD BY
0	6/19/12	ISSUED FOR BID	41656204	DCB	CRG	JP	MAC

REVISIONS

APPROVED BY: GM 41656204
SUPV
DSGN
DWN DCB
CHKD CRG
OK JP
DATE
SCALES AS SHOWN

HYDROTEST TIM-169-12
L-197B
MP 0.00 – 4.467
WOODBRIDGE, CALIFORNIA

PACIFIC GAS AND ELECTRIC COMPANY
WALNUT CREEK, CALIFORNIA

MICROFILM
BILL OF MATL SHEET 08
DWG LIST
SUPSDS
SUPSD BY
SHEET NO. 04 OF 08 SHEETS

41656204 0

PROFILE VIEW

(HORIZONTAL SCALE: 1" = 1000')
(VERTICAL SCALE: 1" = 5')

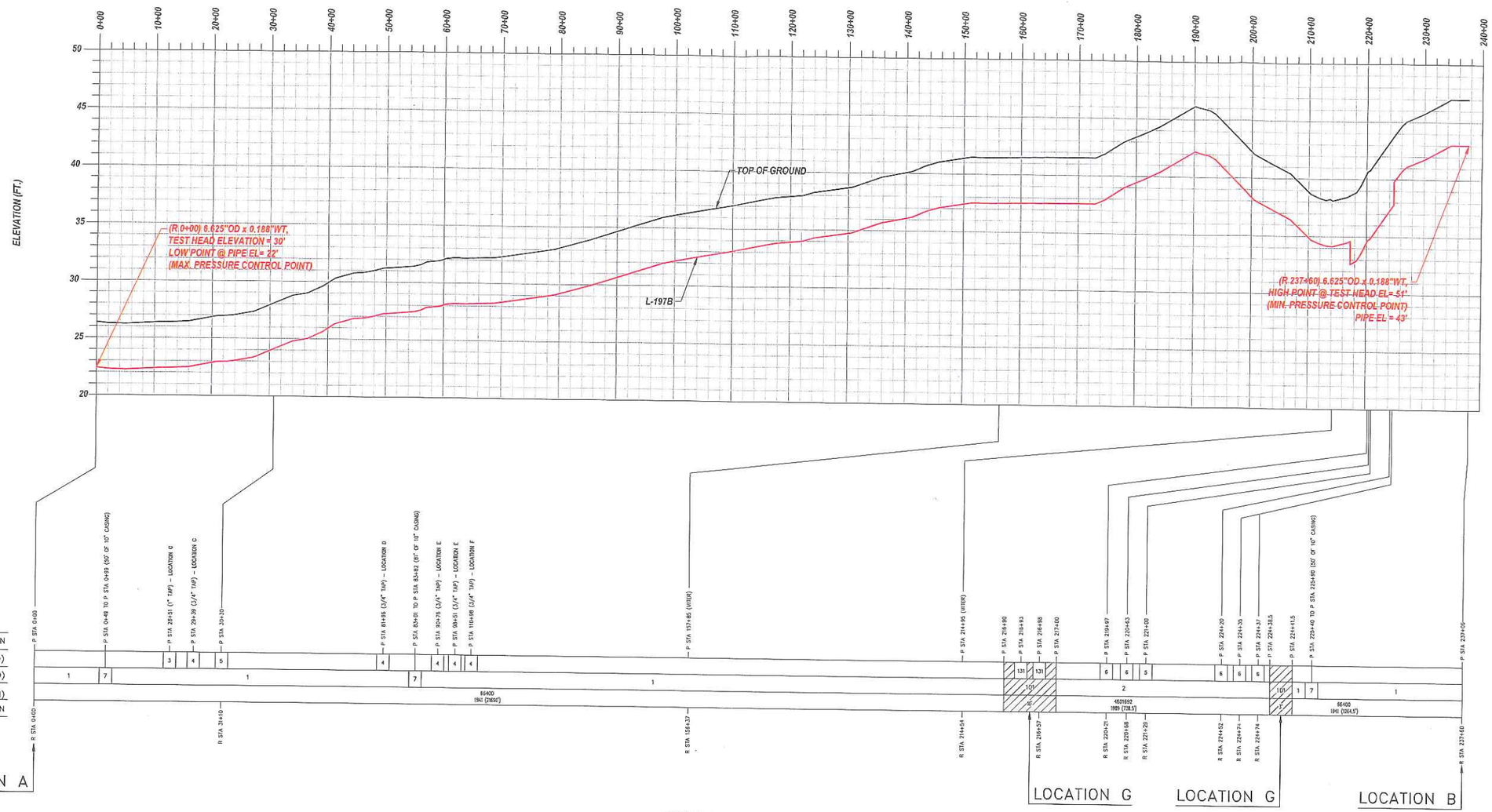

NOTE:
INSTALL PRIOR TO
HYDROTEST

PIPELINE FEATURES

SEE MATERIAL OF RECORD ON
SHEET 8 OF 8
(NOT TO SCALE)

LOCATION	R STA.	ELEV.	RAMP PRESSURE	MIN. PRESS	MAX. PRESS
MIN. PRESSURE CONTROL POINT	237+60	51'	935 psig	850 psig	
MAX. PRESSURE CONTROL POINT	0+00	22'	948 psig		900 psig
LOCATION A (TEST LOCATION)	**0+00**	**30'**	**944 psig**	**859 psig**	**896 psig**
LOCATION B	237+60	51'	935 psig	850 psig	887 psig

NOTE: ELEVATIONS AT TEST LOCATIONS ASSUME TOP OF HYDROTEST PIPING IS 4' ABOVE GROUND ELEVATION

SAFETY

SAFETY PLEDGE

I ALWAYS PUT SAFETY FIRST.
I LOOK FOR AND ACT TO RESOLVE UNSAFE SITUATIONS.
I HELP AND ENCOURAGE OTHERS TO ACT SAFELY.

COPY

ISSUED FOR BID
NOT APPROVED FOR CONSTRUCTION

UNDERGROUND SERVICE ALERT USA
CALL 2 DAYS BEFORE YOU DIG
CALL: 811

NO.	DATE	DESCRIPTION	GM/SPEC	DWN	CHKD	SUPV	APVD BY
0	6/19/12	ISSUED FOR BID	41656204	DCB	CRG	JP	MAC

REVISIONS

APPROVED BY	
GM	41656204
SUPV	
DSGN	
DWN	DCB
CHKD	CRG
OK	JP
DATE	
SCALES	AS SHOWN

HYDROTEST TIM-169-12
L-197B
MP 0.00 – 4.467
WOODBRIDGE, CALIFORNIA

PACIFIC GAS AND ELECTRIC COMPANY
WALNUT CREEK, CALIFORNIA

MICROFILM	
BILL OF MATL SHEET 08	
DWG LIST	
SUPSDS	
SUPSD BY	
SHEET NO. 05 OF 08	SHEETS
41656204	0

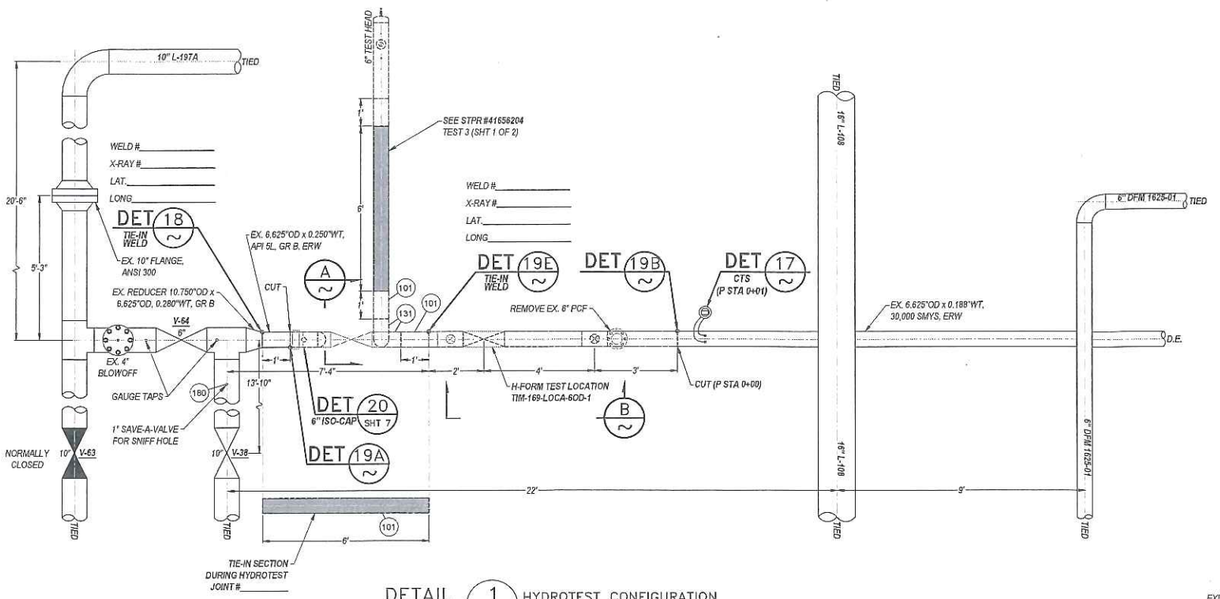

DETAIL 1 SHT 2 — HYDROTEST CONFIGURATION
SCALE: 3/8" = 1'-0" — LOCATION A – LAS VINAS STATION

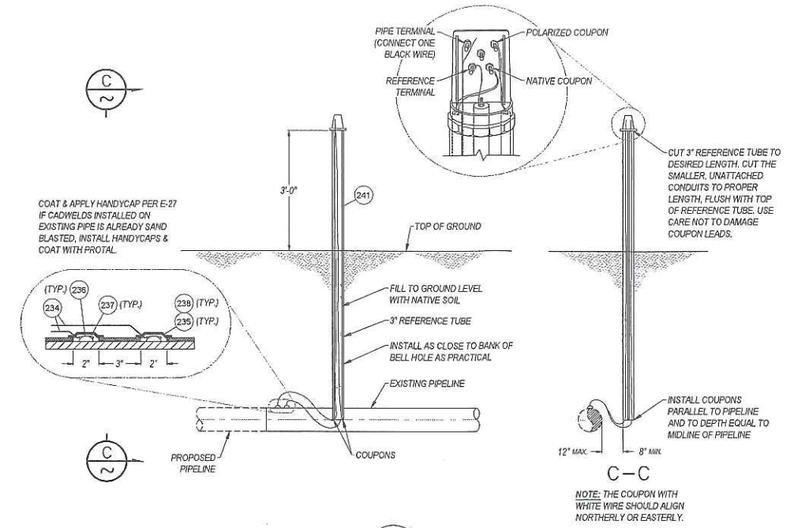

DETAIL 17 — COUPON TEST STATION
NOT TO SCALE — GAS STD 0-10.2

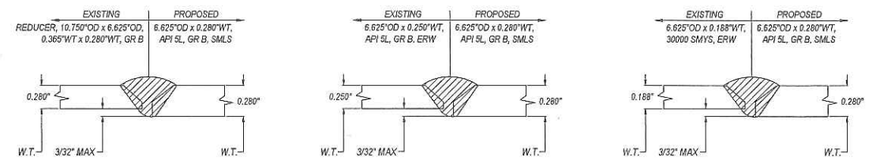

DETAIL 18 — GS&S D-22 FIG. 2 — NOT TO SCALE
DETAIL 19A — GS&S D-22 FIG. 2 — NOT TO SCALE
DETAIL 19B SHTS 4,6&7 — GS&S D-22 FIG. 2 — NOT TO SCALE

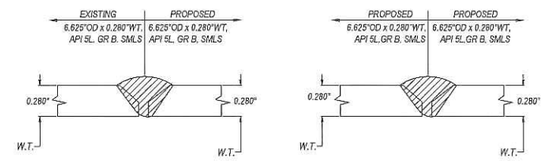

DETAIL 19D SHT 7 — GS&S D-22 FIG. 2 — NOT TO SCALE
DETAIL 19E SHTS 6&7 — GS&S D-22 FIG. 2 — NOT TO SCALE

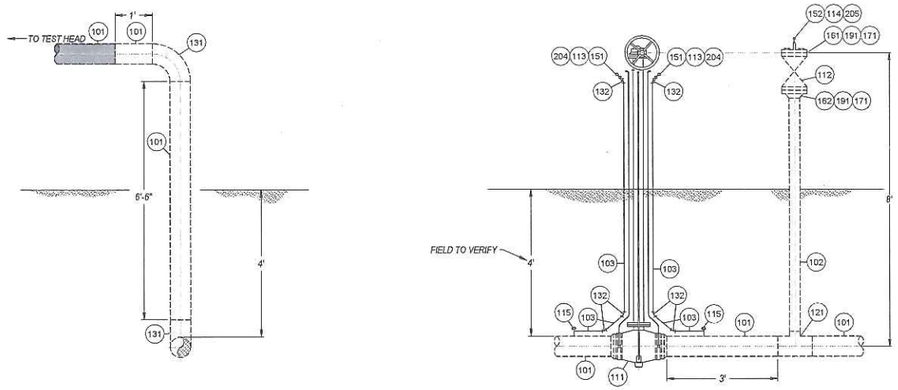

ELEVATION A SCALE: 1/2" = 1'-0" — HYDROTEST PIPING RISER
HYDROTEST CONFIGURATION

ELEVATION B SCALE: 1/2" = 1'-0"

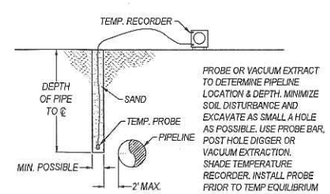

DETAIL 21 SHT 2 — TEMPERATURE PROBE
NOT TO SCALE — MIN. 100' FROM TEST STATION

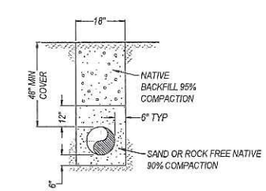

DETAIL — R/W TRENCH
NOT TO SCALE — TYPICAL

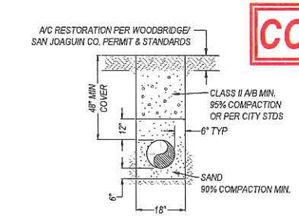

DETAIL — ROAD CROSSING / BELL HOLES
NOT TO SCALE — TYPICAL

MANUALLY OPERATED VALVE DATA STAMP	MANUALLY OPERATED VALVE DATA STAMP
BOM# 111	BOM# 112
TECH ID (VALVE #) V-66	TECH ID (VALVE #) V-F
VALVE TYPE 6" BALL VALVE, ANSI 300	VALVE TYPE 3" BALL VALVE, ANSI 300
MANUFACTURE	MANUFACTURE
MODEL #	MODEL #
SERIAL#	SERIAL#
COMMISSIONING: VALVE TO BE COMMISSIONED BY GAS T&R OR DISTRICT PRIOR TO ANYTHING BEING WELDED OR BOLTED TO THE VALVE ASSEMBLY	COMMISSIONING: VALVE TO BE COMMISSIONED BY GAS T&R OR DISTRICT PRIOR TO ANYTHING BEING WELDED OR BOLTED TO THE VALVE ASSEMBLY
COMMISSIONED BY	COMMISSIONED BY
DATE	DATE
NUMBER OF TURNS	NUMBER OF TURNS

GM 66400 (1941)

EXIST PIPE SPECS
HEADER SIZE: 6.625"
PIPE SPECS: 30000 SMYS, ERW
WALL THICKNESS: 0.188"
PRESENT MAOP: 388 PSIG
% SMYS @ MAOP: 22.79

MAXIMUM ALLOWABLE PRESSURE DURING WELDING (G.S.&S. D-22)
EVALUATE THE FOLLOWING OPERATING PRESSURE LIMITATIONS TO DETERMINE THE MAXIMUM OPERATING PRESSURE PERMITTED DURING WELDING
A) (388 PSIG) WHEN WELDING ON BODY OF THE PIPE UNLESS,
B) (349 PSIG) WHEN WELDING WITHIN 3" OF THE LONGITUDINAL SEAM (EXCEPT DSAW PIPE),THE CIRCUMFERENTIAL AND ANY BRANCH WELDS OR WITHIN 3" OF ANY BRANCH WELDS OR CONDITIONS OF LAMINATIONS, TEARS IN THE PIPE WHICH EXCEEDS 1/3 OF THE NOMINAL WALL THICKNESS IN DEPTH AND/OR 1/4 OF THE NOMINAL PIPE DIAMETER IN LENGTH.

GM 135396 (1956)

EXIST PIPE SPECS
HEADER SIZE: 6.625"
PIPE SPECS: API 5L, GR B, ERW
WALL THICKNESS: 0.250"
PRESENT MAOP: 388 PSIG
% SMYS @ MAOP: 14.69

MAXIMUM ALLOWABLE PRESSURE DURING WELDING (G.S.&S. D-22)
EVALUATE THE FOLLOWING OPERATING PRESSURE LIMITATIONS TO DETERMINE THE MAXIMUM OPERATING PRESSURE PERMITTED DURING WELDING
A) (388 PSIG) WHEN WELDING ON BODY OF THE PIPE UNLESS,
B) (388 PSIG) WHEN WELDING WITHIN 3" OF THE LONGITUDINAL SEAM (EXCEPT DSAW PIPE),THE CIRCUMFERENTIAL AND ANY BRANCH WELDS OR WITHIN 3" OF ANY BRANCH WELDS OR CONDITIONS OF LAMINATIONS, TEARS IN THE PIPE WHICH EXCEEDS 1/3 OF THE NOMINAL WALL THICKNESS IN DEPTH AND/OR 1/4 OF THE NOMINAL PIPE DIAMETER IN LENGTH.

UNDERGROUND SERVICE ALERT USA — CALL BEFORE YOU DIG — CALL: 811

NO.	DATE	DESCRIPTION	GM/SPEC	DWN	CHKD	SUPV	APVD	BY
0	6/19/12	ISSUED FOR BID	41656204	DCB	CRG	JP		MAC

REVISIONS

APPROVED BY: GM 41656204; SUPV; DSGN; DWN DCB; CHKD CRG; OK JP; DATE; SCALES AS SHOWN

HYDROTEST TIM-169-12
L-197B
MP 0.00 – 4.467
WOODBRIDGE, CALIFORNIA

PACIFIC GAS AND ELECTRIC COMPANY
WALNUT CREEK, CALIFORNIA

MICROFILM
BILL OF MATL SHEET 08
DWG LIST
SUPSDS
SUPSD BY
SHEET NO. 06 OF 08 SHEETS

41656204 0

JOB NO. 30923303
BOM # 101
DESIGN CRITERIA
LOCATION CLASS 2
DESIGN FACTOR 0.5
FDP 720 PSIG 24.34 % SMYS
MAOP 500 PSIG 16.90 % SMYS
STRENGTH TEST PRESSURE
MAX. 950 PSIG 32.11 % SMYS
MIN. 850 PSIG 28.73 % SMYS
2663 PSIG=90% SMYS
TEST MEDIUM WATER
PIPE SPEC API 5L, GR B, SMLS
O.D. 6.625"
W.T. 0.280"
WELD INSPECTION (GAS STD.D-40)*
☒RADIOGRAPHIC:
☐20% MIN. (% OF EACH WELDER'S DAILY WORK)
☒100%
*VISUALLY INSPECT 100% OF ALL WELDS THAT ARE NOT RADIOGRAPHICALLY INSPECTED. (THIS REQUIREMENT APPLIES EVEN IF NO RADIOGRAPHIC INSPECTION IS REQUIRED.)

JOB NO. 30923303
BOM # 102
DESIGN CRITERIA
LOCATION CLASS 2
DESIGN FACTOR 0.5
FDP 720 PSIG 16.67 % SMYS
MAOP 500 PSIG 11.57 % SMYS
STRENGTH TEST PRESSURE
MAX. 950 PSIG 21.99 % SMYS
MIN. 850 PSIG 19.68 % SMYS
3888 PSIG=90% SMYS
TEST MEDIUM WATER
PIPE SPEC API 5L, GR B, SMLS
O.D. 3.500"
W.T. 0.216"
WELD INSPECTION (GAS STD.D-40)*
☐RADIOGRAPHIC:
☐20% MIN. (% OF EACH WELDER'S DAILY WORK)
☐100%
*VISUALLY INSPECT 100% OF ALL WELDS THAT ARE NOT RADIOGRAPHICALLY INSPECTED. (THIS REQUIREMENT APPLIES EVEN IF NO RADIOGRAPHIC INSPECTION IS REQUIRED.)

JOB NO. 30923303
BOM # 103
DESIGN CRITERIA
LOCATION CLASS 2
DESIGN FACTOR 0.5
FDP 720 PSIG 7.01 % SMYS
MAOP 500 PSIG 4.87 % SMYS
STRENGTH TEST PRESSURE
MAX. 950 PSIG 9.25 % SMYS
MIN. 850 PSIG 8.28 % SMYS
9240 PSIG=90% SMYS
TEST MEDIUM WATER
PIPE SPEC API 5L, GR B, SMLS
O.D. 1.050"
W.T. 0.154"
WELD INSPECTION (GAS STD.D-40)*
☐RADIOGRAPHIC:
☐20% MIN. (% OF EACH WELDER'S DAILY WORK)
☐100%
*VISUALLY INSPECT 100% OF ALL WELDS THAT ARE NOT RADIOGRAPHICALLY INSPECTED. (THIS REQUIREMENT APPLIES EVEN IF NO RADIOGRAPHIC INSPECTION IS REQUIRED.)

SAFETY
SAFETY PLEDGE
I ALWAYS PUT SAFETY FIRST.
I LOOK FOR AND ACT TO RESOLVE UNSAFE SITUATIONS.
I HELP AND ENCOURAGE OTHERS TO ACT SAFELY.

COPY

ISSUED FOR BID
NOT APPROVED FOR CONSTRUCTION

TEST 3

JOB NO. 41656204
BOM # 101
DESIGN CRITERIA
LOCATION CLASS 3
DESIGN FACTOR 0.5
FDP 720 PSIG 24.34 % SMYS
MAOP 500 PSIG 16.90 % SMYS
STRENGTH TEST PRESSURE
MAX. 950 PSIG 32.11 % SMYS
MIN. 850 PSIG 28.73 % SMYS
2663 PSIG=90% SMYS
TEST MEDIUM WATER
PIPE SPEC API 5L, GR B, SMLS
O.D. 6.625"
W.T. 0.280"
WELD INSPECTION (GAS STD.D-40)*
☒RADIOGRAPHIC:
☐20% MIN. (% OF EACH WELDER'S
☒100% DAILY WORK)
*VISUALLY INSPECT 100% OF ALL WELDS THAT ARE NOT RADIOGRAPHICALLY INSPECTED. (THIS REQUIREMENT APPLIES EVEN IF NO RADIOGRAPHIC INSPECTION IS REQUIRED.)

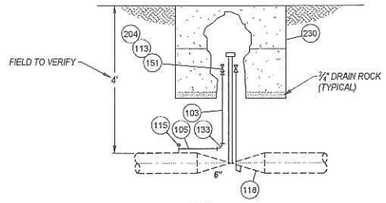

ELEVATION F — INSTALL 6" VALVE
SCALE: 1/2" = 1'-0"
LOCATION B – MOKELUMNE ST & N. LOWER SACRAMENTO RD

MANUALLY OPERATED VALVE DATA STAMP	MANUALLY OPERATED VALVE DATA STAMP
BOM# 118	BOM# 118
TECH ID (VALVE #)	TECH ID (VALVE #)
VALVE TYPE 6" BALL VALVE, ANSI 300	VALVE TYPE 6" BALL VALVE, ANSI 300
MANUFACTURE	MANUFACTURE
MODEL #	MODEL #
SERIAL#	SERIAL#
COMMISSIONING	COMMISSIONING
VALVE TO BE COMMISSIONED BY GAS T&M OR DISTRICT PRIOR TO ANYTHING BEING WELDED OR BOLTED TO THE VALVE ASSEMBLY	VALVE TO BE COMMISSIONED BY GAS T&M OR DISTRICT PRIOR TO ANYTHING BEING WELDED OR BOLTED TO THE VALVE ASSEMBLY
COMMISSIONED BY	COMMISSIONED BY
DATE	DATE
NUMBER OF TURNS	NUMBER OF TURNS

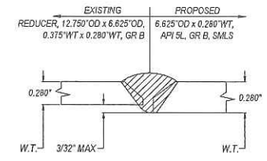

DETAIL 14 (GS&S D-22, FIG. 2)
NOT TO SCALE

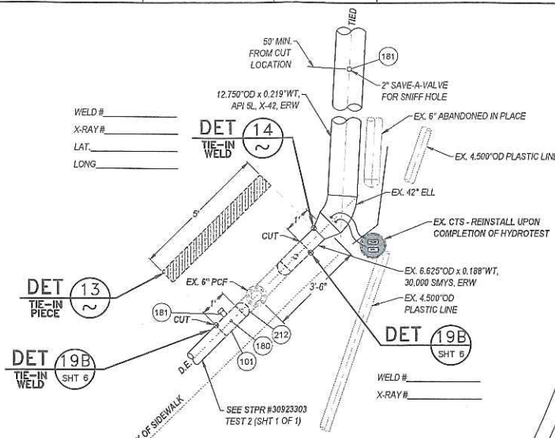

DET 14 TIE-IN WELD — WELD #, X-RAY #, LAT, LONG
DET 13 TIE-IN PIECE
DET 19B SHT 6 TIE-IN WELD — WELD #, X-RAY #, LAT, LONG
DET 19B SHT 6 — WELD #, X-RAY #

DETAIL 11 SHT 2 — LOCATION B
SCALE: 3/8" = 1'-0"
LOCATION B – MOKELUMNE ST & N. LOWER SACRAMENTO RD

TEMPORARY BY-PASS

JOB NO. 41656204
BOM # 100
DESIGN CRITERIA
LOCATION CLASS 3
DESIGN FACTOR 0.5
FDP 720 PSIG 29.77 % SMYS
MAOP 388 PSIG 16.04 % SMYS
STRENGTH TEST PRESSURE
MAX. 876 PSIG 36.22 % SMYS
MIN. 776 PSIG 32.08 % SMYS
2177 PSIG=90% SMYS
TEST MEDIUM NITROGEN
PIPE SPEC API 5L, X-52, ERW
O.D. 10.750"
W.T. 0.250"
WELD INSPECTION (GAS STD.D-40)*
☒RADIOGRAPHIC:
☐20% MIN. (% OF EACH WELDER'S
☒100% DAILY WORK)
*VISUALLY INSPECT 100% OF ALL WELDS THAT ARE NOT RADIOGRAPHICALLY INSPECTED. (THIS REQUIREMENT APPLIES EVEN IF NO RADIOGRAPHIC INSPECTION IS REQUIRED.)

TEST 2

JOB NO. 30923303
BOM # 101
DESIGN CRITERIA
LOCATION CLASS 3
DESIGN FACTOR 0.5
FDP 720 PSIG 24.34 % SMYS
MAOP 500 PSIG 16.90 % SMYS
STRENGTH TEST PRESSURE
MAX. 950 PSIG 32.11 % SMYS
MIN. 850 PSIG 28.73 % SMYS
2663 PSIG=90% SMYS
TEST MEDIUM NITROGEN
PIPE SPEC API 5L, GR B, SMLS
O.D. 6.625"
W.T. 0.280"
WELD INSPECTION (GAS STD.D-40)*
☒RADIOGRAPHIC:
☐20% MIN. (% OF EACH WELDER'S
☒100% DAILY WORK)
*VISUALLY INSPECT 100% OF ALL WELDS THAT ARE NOT RADIOGRAPHICALLY INSPECTED. (THIS REQUIREMENT APPLIES EVEN IF NO RADIOGRAPHIC INSPECTION IS REQUIRED.)

ALL WORK TO BE PERFORMED ON DETAILS 2 & 11
TO BE CHARGED TO CAPITAL ORDER # 30923303

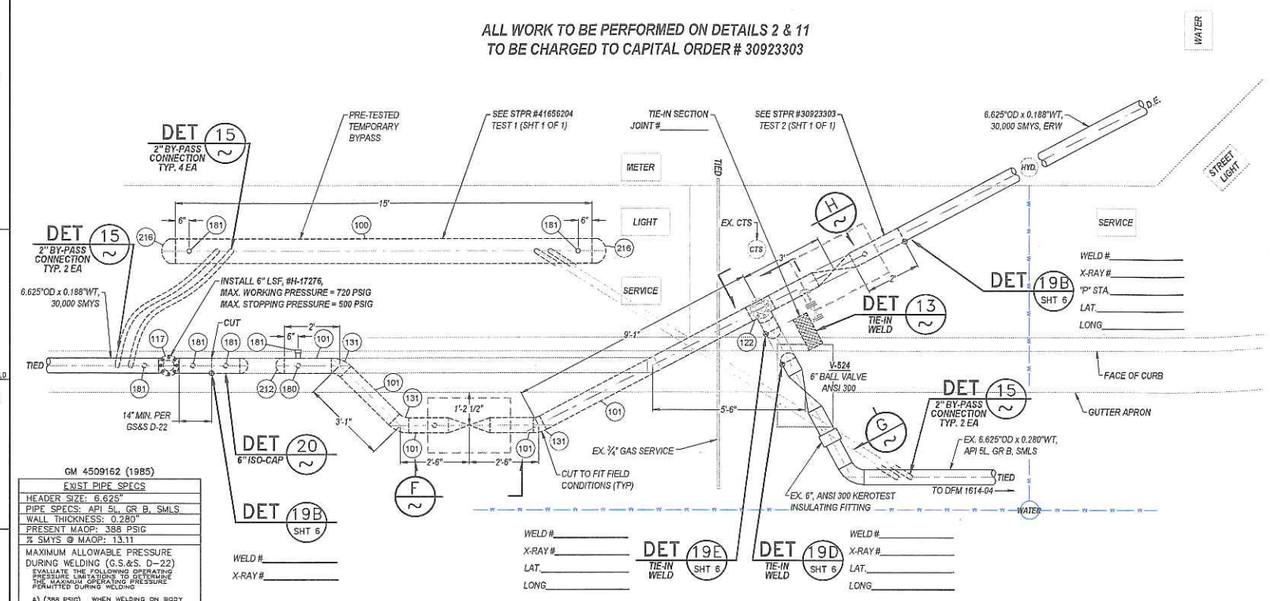

DETAIL 2 SHT 2 — LOCATION B
SCALE: 3/8" = 1'-0"
LOCATION B – MOKELUMNE ST & N. LOWER SACRAMENTO RD

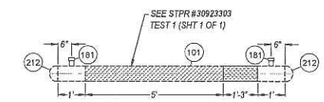

DETAIL 13 — 6" TIE-IN PIECES & ISOLATION CAPS
SCALE: 3/8" = 1'-0"
LOCATION B – MOKELUMNE ST & N. LOWER SACRAMENTO RD

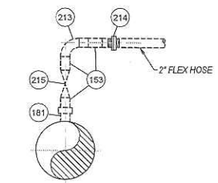

DETAIL 15 — 2" BYPASS CONNECTION, 8 EACH
SCALE: 3/8" = 1'-0"
LOCATION B – MOKELUMNE ST & N. LOWER SACRAMENTO RD

TEST 2

JOB NO. 30923303
BOM # 103
DESIGN CRITERIA
LOCATION CLASS 3
DESIGN FACTOR 0.5
FDP 720 PSIG 7.01 % SMYS
MAOP 500 PSIG 4.87 % SMYS
STRENGTH TEST PRESSURE
MAX. 950 PSIG 9.25 % SMYS
MIN. 850 PSIG 8.27 % SMYS
9240 PSIG=90% SMYS
TEST MEDIUM NITROGEN
PIPE SPEC API 5L, GR B, SMLS
O.D. 1.050"
W.T. 0.154"
WELD INSPECTION (GAS STD.D-40)*
☐RADIOGRAPHIC:
☐20% MIN. (% OF EACH WELDER'S
☐100% DAILY WORK)
*VISUALLY INSPECT 100% OF ALL WELDS THAT ARE NOT RADIOGRAPHICALLY INSPECTED. (THIS REQUIREMENT APPLIES EVEN IF NO RADIOGRAPHIC INSPECTION IS REQUIRED.)

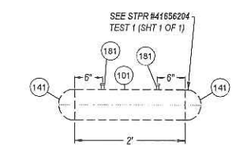

DETAIL 20 SHTS 6&7 — 6" ISOLATION CAP
SCALE: 3/4" = 1'-0"
HYDROTEST CONFIGURATION

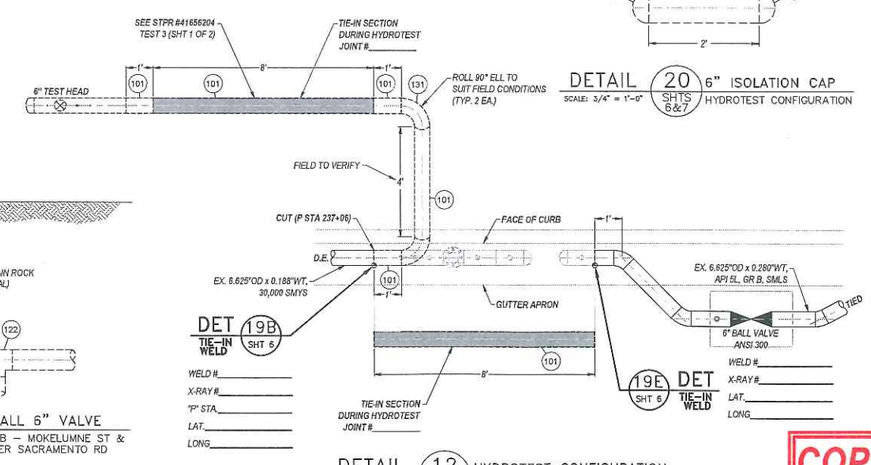

DETAIL 12 — HYDROTEST CONFIGURATION
SCALE: 3/8" = 1'-0"
LOCATION B – MOKELUMNE ST & N. LOWER SACRAMENTO RD

GM 4509162 (1985)

EXIST PIPE SPECS
HEADER SIZE: 6.625"
PIPE SPECS: API 5L, GR B, SMLS
WALL THICKNESS: 0.280"
PRESENT MAOP: 388 PSIG
% SMYS @ MAOP: 13.11
MAXIMUM ALLOWABLE PRESSURE DURING WELDING (G.S.&S. D-22) EVALUATE THE FOLLOWING OPERATING PRESSURE LIMITATIONS TO DETERMINE THE MAXIMUM OPERATING PRESSURE PERMITTED DURING WELDING: A) (388 PSIG) WHEN WELDING ON BODY OF THE PIPE UNLESS, B) (388 PSIG) WHEN WELDING WITHIN 3" OF THE LONGITUDINAL SEAM (EXCEPT DSAW PIPE), THE CIRCUMFERENTIAL AND ANY BRANCH WELD OR WITHIN 5x AND OF ANY DEFECT (SQUIRES, CORROSION, LAMINATIONS, ETC.) IN THE PIPE WHICH EXCEEDS 1/3 OF THE NOMINAL WALL THICKNESS OR DEPTH AND/OR 1/4 OF THE NOMINAL PIPE DIAMETER IN LENGTH.

GM 170196 (1968)

EXIST PIPE SPECS
HEADER SIZE: 12.750"
PIPE SPECS: API 5L, X-42, ERW
WALL THICKNESS: 0.219"
PRESENT MAOP: 388 PSIG
% SMYS @ MAOP: 26.89
MAXIMUM ALLOWABLE PRESSURE DURING WELDING (G.S.&S. D-22) EVALUATE THE FOLLOWING OPERATING PRESSURE LIMITATIONS TO DETERMINE THE MAXIMUM OPERATING PRESSURE PERMITTED DURING WELDING: A) (388 PSIG) WHEN WELDING ON BODY OF THE PIPE UNLESS, B) (268 PSIG) WHEN WELDING WITHIN 3" OF THE LONGITUDINAL SEAM (EXCEPT DSAW PIPE), THE CIRCUMFERENTIAL AND ANY BRANCH WELD OR WITHIN 5x AND OF ANY DEFECT (SQUIRES, CORROSION, LAMINATIONS, ETC.) IN THE PIPE WHICH EXCEEDS 1/3 OF THE NOMINAL WALL THICKNESS OR DEPTH AND/OR 1/4 OF THE NOMINAL PIPE DIAMETER IN LENGTH.

GM 56400 (1941)

EXIST PIPE SPECS
HEADER SIZE: 6.625"
PIPE SPECS: 30000 SMYS, ERW
WALL THICKNESS: 0.188
PRESENT MAOP: 388 PSIG
% SMYS @ MAOP: 22.79
MAXIMUM ALLOWABLE PRESSURE DURING WELDING (G.S.&S. D-22) EVALUATE THE FOLLOWING OPERATING PRESSURE LIMITATIONS TO DETERMINE THE MAXIMUM OPERATING PRESSURE PERMITTED DURING WELDING: A) (388 PSIG) WHEN WELDING ON BODY OF THE PIPE UNLESS, B) (340 PSIG) WHEN WELDING WITHIN 3" OF THE LONGITUDINAL SEAM (EXCEPT DSAW PIPE), THE CIRCUMFERENTIAL AND ANY BRANCH WELD OR WITHIN 5x AND OF ANY DEFECT (SQUIRES, CORROSION, LAMINATIONS, ETC.) IN THE PIPE WHICH EXCEEDS 1/3 OF THE NOMINAL WALL THICKNESS OR DEPTH AND/OR 1/4 OF THE NOMINAL PIPE DIAMETER IN LENGTH.

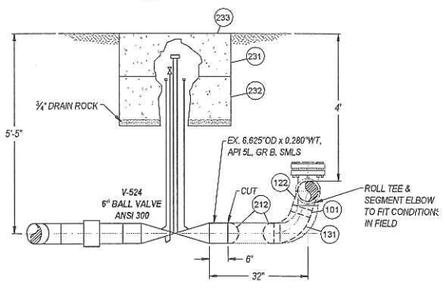

ELEVATION G — INSTALL 6" TEE
SCALE: 1/2" = 1'-0"
LOCATION B – MOKELUMNE ST & N. LOWER SACRAMENTO RD

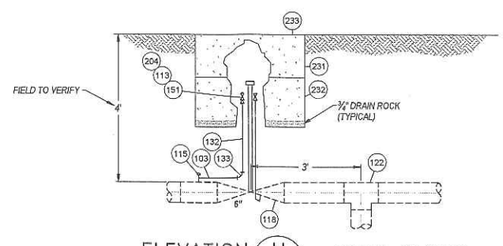

ELEVATION H — INSTALL 6" VALVE
SCALE: 1/2" = 1'-0"
LOCATION B – MOKELUMNE ST & N. LOWER SACRAMENTO RD

SAFETY
SAFETY PLEDGE
I ALWAYS PUT SAFETY FIRST.
I LOOK FOR AND ACT TO RESOLVE UNSAFE SITUATIONS.
I HELP AND ENCOURAGE OTHERS TO ACT SAFELY.

COPY

ISSUED FOR BID
NOT APPROVED FOR CONSTRUCTION

UNDERGROUND SERVICE ALERT USA CALL BEFORE YOU DIG. CALL: 811

NO.	DATE	DESCRIPTION	GM/SPEC	DWN	CHKD	SUPV	APVD BY
0	6/19/12	ISSUED FOR BID	41656204	DCB	CRG	JP	MAC

REVISIONS

APPROVED BY: GM 41656204, SUPV, DSGN, DWN DCB, CHKD CRG, OK JP, DATE, SCALES AS SHOWN

HYDROTEST TIM-169-12
L-197B
MP 0.00 – 4.467
WOODBRIDGE, CALIFORNIA

PACIFIC GAS AND ELECTRIC COMPANY
WALNUT CREEK, CALIFORNIA

MICROFILM
BILL OF MATL SHEET 08
DWG LIST
SUPSDS
SUPSD BY
SHEET NO. 07 OF 08 SHEETS
41656204 0

MATERIAL OF RECORD

Item Number	Description	UNITS	Quantity	ABI SMYS Results
1	Pipe, 6.625" OD x 0.188" WT, API 5L, 30,000 SMYS*, ERW*	Ft.	22954.5	
2	Pipe, 6.625" OD x 0.188" WT, API 5L, X-42, ERW	Ft.	738.5	
3	Tap, 1", Branch Piping, 1.315" OD x 0.133" WT, API 5L, GR B, SMLS (1 Ea.)	Ft.	88	
4	Tap,1", Branch Piping, 1.050" OD x 0.113" WT, API 5L, GR B, SMLS (5 Ea.)	Ft.	204	
5	Elbow, 6.625" OD x 0.280" WT, GR B, LR, 45 Degree	Ea.	2	
6	Elbow, 6.625" OD x 0.280" WT, GR B, LR, 90 Degree	Ea.	5	
7	Casing, 10.750" OD	Ft.	181	

BILLS OF MATERIAL

Item Number	Description	PG&E Material Code	Units	Quantity	Catalog or Drawing Refrence	Heat Number (As Built for Pipe and HY Fittings)	Serial Number (As Built for Pipe and HY Fittings)
	EXPENSE ORDER # 41656204						
100	Pipe, 10.750" OD x 0.250" WT, API 5L, X-52, ERW, Bare	M010797	Ft.	15	GS&S A-15		
101	Pipe, 6.625" OD x 0.280" WT, API 5L, GR B, SMLS, Bare	M011688	Ft.	33	GS&S A-15		
117	PCF, 6", Mueller H-17276,6" LSF, 720 PSI	M022874	Ea.	1	GS&S C-15.3		
131	Elbow, 6.625" OD x 0.280" WT, GR B, LR, 90 deg	M022091	Ea.	4	GS&S B-20		
180	Save-A-Valve Nipple, 1"	M022287	Ea.	1	GS&S C-14		
181	Save-A-Valve Nipple, 2"	M022289	Ea.	1	GS&S C-14		
201	Cap, 3/4" Forged Steel, Threaded, 3000#	M021464	Ea.	11	GS&S B-10.1		
203	Cap, 1" Forged Steel, Threaded, 3000#	M021465	Ea.	2	GS&S B-10.1		
212	Cap, 6.625" OD x 0.280" WT, GR B	M022038	Ea.	2	GS&S B-20		
213	2" Wing Union		Ea.	8			
214	Elbow, 2", Threaded, Forged Steel	M021435	Ea.	8	GS&S B-12.2		
215	Valve, Ball, 2", Threaded Ends, 3000#	M034637	Ea.	8	GS&S F-20		
216	Cap, 10.750" OD x 0.250" WT, Y-52	M022228	Ea.	2			
234	Wire, 500' Coil #10, HMWPE with 47 Mil Thickness, 600 Volts, Solid Copper, Black Insulation	M294991	Ea.	1	GS&S E-27		
235	Cartridges, Cadweld CA-15, or Thermoweld 15P, 15-Gram, 20 Per Box	M159260	Ea.	1	GS&S E-27		
236	Royston Handy Cap (1 Per Weld), 20 Per Box	M562324	Ea.	1	GS&S E-27		
237	Sleeve, Copper, Thermoweld A200 or Equivalent	M303755	Ea.	2	GS&S E-27		
238	Liquid Adhesive,Royston Roybound 747, 16oz Spray Can, 12 Per Carton	M130850	Ea.	1	GS&S E-27		
241	Coupon Test Station	M560691	Ea.	1	GS&S E-27		
	CAPITAL ORDER # 30923303						
101	Pipe, 6.625" OD x 0.280" WT, API 5L, GR B, SMLS, Bare	M011688	Ft.	53	GS&S A-15		
102	Pipe, 3.500" OD x 0.216" WT, API 5L, GR B, SMLS, Bare	M011692	Ft.	7	GS&S A-15		
103	Pipe, 1.05" OD x 0.154" WT, API 5L, GR B, SMLS,Bare	M011951	Ft.	26	GS&S A-15		
111	Valve, Ball, 6.625", ANSI 300, Weld Ends, 0.280" WT, X-42, Gear Operated, Per GS&S F-21.1, Fig. 1, A=8	M030720	Ea.	1	GS&S F-21.1		
112	Valve, Ball, 3.500", ANSI 300, Flange Ends, Lever Operated, Per GS&S F-21	M034521	Ea.	1	GS&S F-21		
113	Valve, Ball, 3/4", 2000# MWP, Threaded, KF, Contramatics	M034405	Ea.	4	GS&S F-20		
114	Valve, Ball, 1/2", 1000# MWP, Threaded Ends	M013836	Ea.	1	GS&S F-20		
115	Valve Tee, 1" Mueller H-17656, 1440 MWP	M022445	Ea.	4	GS&S C-11		
118	Valve, Ball, 6", ANSI 300, Beveled to match 0.280"WT, X-42 Pipe, Per GS&S Fig 21.1 Figure 3 A=3"	M031117	Ea.	2	GS&S F-21.1		
121	Tee, Reducing, 6.625" OD x 3.500"OD Outlet, STD Wall, GR B	M022364	Ea.	1	GS&S B-20		
122	Tee, Straight, 6.625" OD x 0.280" WT, GR B	M022150	Ea.	1	GS&S B-20		
131	Elbow, 6.625" OD x 0.280" WT, GR B, LR, 90 deg	M022091	Ea.	4	GS&S B-20		
132	Elbow, 3/4" Socket Weld, 3000#, 45 Deg	M022587	Ea.	10	GS&S B-21		
133	Elbow, 3/4" Socket Weld, 3000#, 90 Deg	M022588	Ea.	2	GS&S B-21		
151	Nipple, 3/4" x 3", Steel, API 5L, GR B, EH, Threaded	M020687	Ea.	4	GS&S B-13.1		
152	Nipple, 1/2" x 4", Steel, API 5L, GR B, EH, Threaded	M020681	Ea.	1	GS&S B-13.1		
153	Nipple, 1-1/2" x 4", Steel, API 5L, GR B, EH, Threaded	M020714	Ea.	8	GS&S B-13.1		
161	Flange, Blind, Weldneck, RF, ANSI 300, with 1/2" tap	M020860	Ea.	1	GS&S B-43.2		
162	Flange, 3", Weldneck, RF, ANSI 300	M025313	Ea.	1	GS&S B-43		
171	Gasket, 3", PSI Linebacker, Type F, ANSI 300	M016687	Ea.	4	GS&S B-45.1		
181	Save-A-Valve Nipple, 1"	M022287	Ea.	2	GS&S C-14		
191	Bolt, 3/4" x 4 1/4", with matching Nut, for 3" flanges	M192697	Ea.	16	GS&S B-46		
204	Plug, 3/4", Forged Steel, Hex Head, Threaded	M021250	Ea.	4	GS&S B-10.1		
205	Plug, 1/2", Forged Steel, Hex Head, Threaded	M021249	Ea.	1	GS&S B-10.1		
212	Cap, 6.625" OD x 0.280" WT, GR B	M022038	Ea.	6	GS&S B-20		
230	Box, Complete Assembly, Concrete, Full Traffic Assembly with Slip Resistant Cover 24" X 36" X 2'-6" Deep, APPROVED MANUFACTURERS: TEICHERT BROOKS, UTILITY VAULT, JENSEN PRECAST	M019598	Ea.	1	ED 028028, Table 8		
231	Box, Concrete, 36" x 24" Nominal	M043218	Ea.	1	GS&S K-42		
232	Extension, 10", for Concrete Box 36" x 24" Nominal	M043170	Ea.	1	GS&S K-42		
233	Cover, Steel, Slip-Resistant, 1/4" Thick for Concrete Box 36" x 24" Nominal	M043665	Ea.	1	GS&S K-42		
	CONTINGECY ORDER # 41656204						
101	Pipe, 6.625" OD x 0.280" WT, API 5L GR B, SMLS, Bare	M011688	Ft.	40	GS&S A-15		
131	Elbow, 6.625" OD x 0.280" WT, GR B, LR, 90deg	M022091	Ea.	4	GS&S B-20		

SAFETY

SAFETY PLEDGE

I ALWAYS PUT SAFETY FIRST.
I LOOK FOR AND ACT TO RESOLVE UNSAFE SITUATIONS.
I HELP AND ENCOURAGE OTHERS TO ACT SAFELY.

ISSUED FOR BID
***NOT* APPROVED FOR CONSTRUCTION**

COPY

UNDERGROUND SERVICE ALERT USA CALL BEFORE YOU DIG
CALL: 811

NO.	DATE	DESCRIPTION	GM/SPEC	DWN	CHKD	SUPV	APVD BY
0	6/19/12	ISSUED FOR BID	41656204	DCB	CRG	JP	MAC

REVISIONS

APPROVED BY
GM 41656204
SUPV
DSGN
DWN DCB
CHKD CRG
OK JP
DATE
SCALES AS SHOWN

HYDROTEST TIM-169-12
L-197B
MP 0.00 - 4.467
WOODBRIDGE, CALIFORNIA

PACIFIC GAS AND ELECTRIC COMPANY
WALNUT CREEK, CALIFORNIA

MICROFILM
BILL OF MATL SHEET 08
DWG LIST
SUPSDS
SUPSD BY
SHEET NO. 08 OF 08 SHEETS

41656204 | 0

PG&E Hydrotest TIM-169-12

Mokelumne St & N Lower Sacramento Rd

Woodbridge, CA

(Not to Scale)

06/28/12

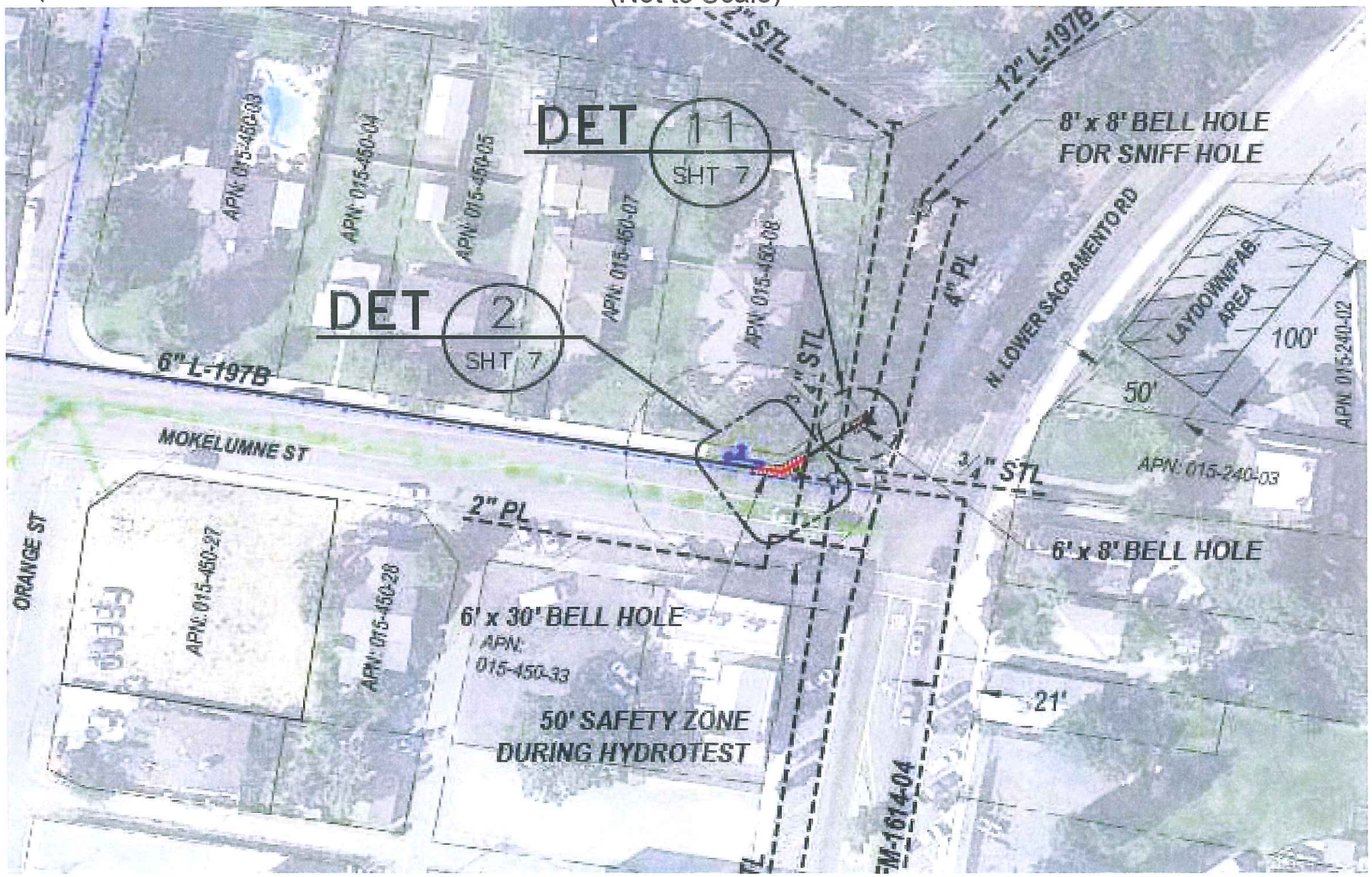

Test Location B

PG&E Hydrotest TIM-169-12

Mokelumne St & E Woodbridge Rd

Woodbridge, CA

(Not to Scale)

06/28/12

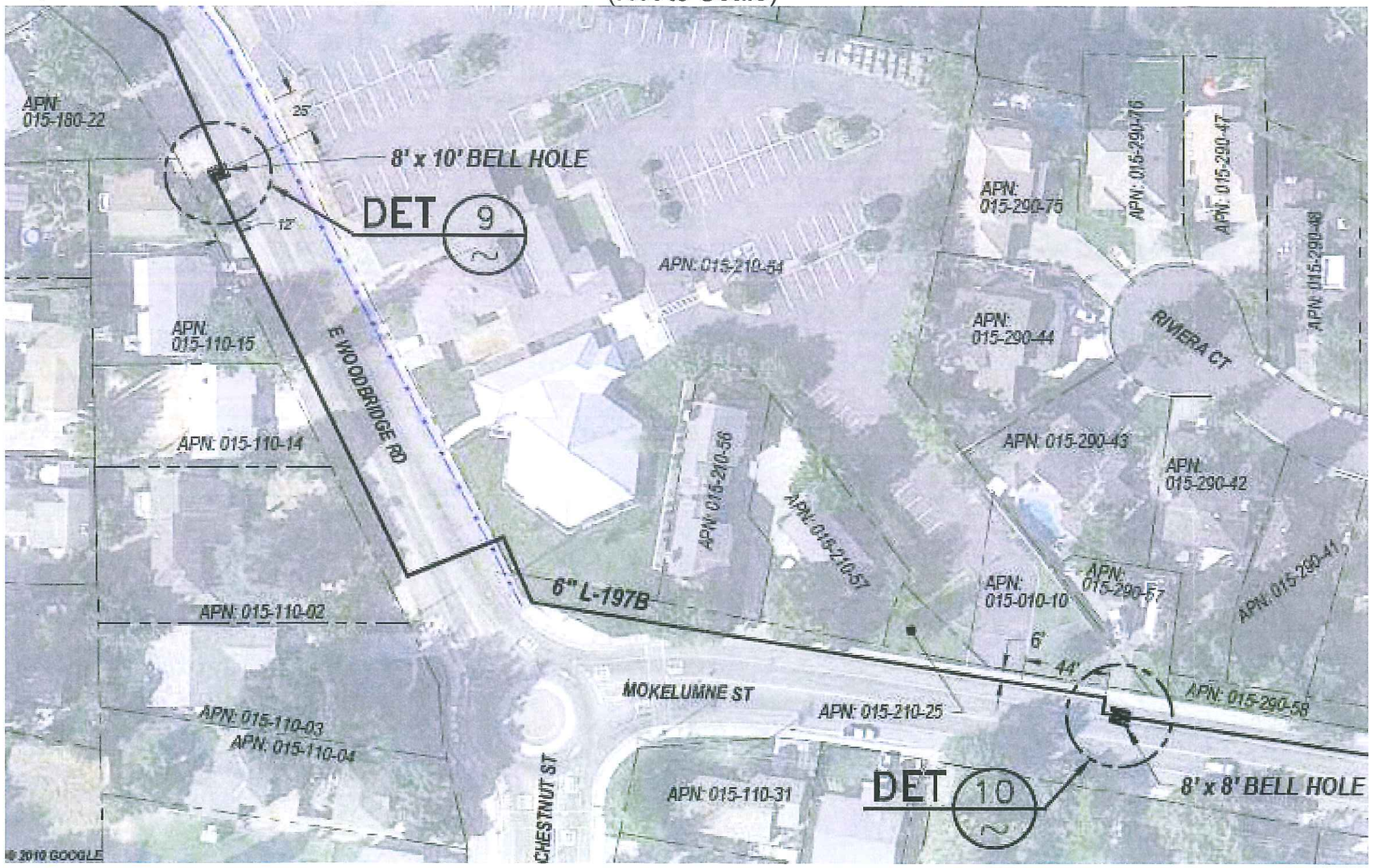

Test Location G