COUNTY OF SAN JOAQUIN
DEPARTMENT OF PUBLIC WORKS
STOCKTON, CALIFORNIA

INMAN AVENUE RECONSTRUCTION

(Princeton Avenue to Mission Road)

To Be Supplemented by Standard Plans Dated May 2006

COUNTY OF SAN JOAQUIN

Submitted _____, 2013

THOMAS M. GAU
DIRECTOR OF PUBLIC WORKS

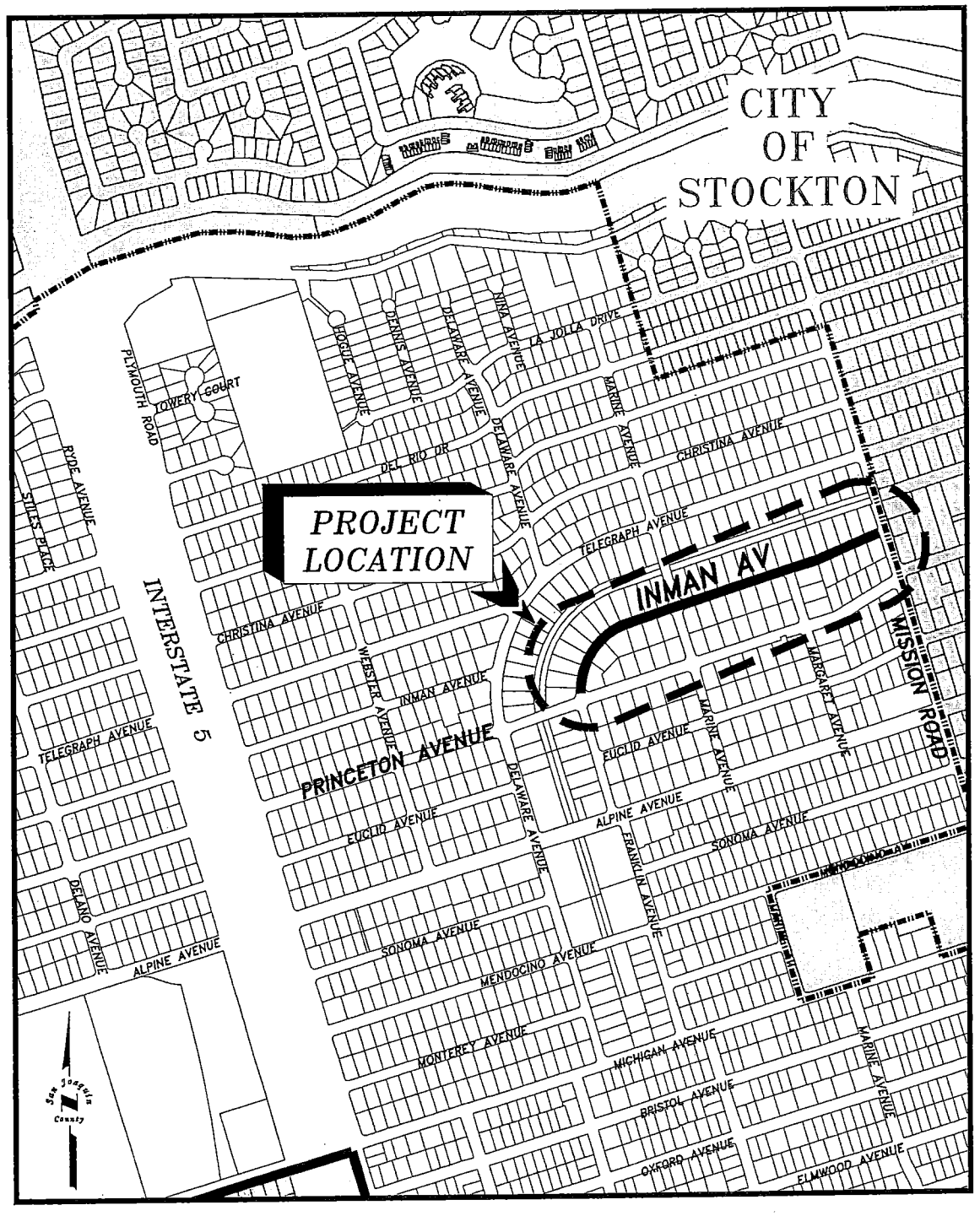

PROJECT LOCATION MAP
NO SCALE

INDEX OF SHEETS

Sheet No. 1	TITLE PAGE
Sheet No. 2	GENERAL NOTES
Sheet No. 3	TYPICAL SECTION & CONSTRUCTION DETAILS
Sheet No. 4	CONSTRUCTION DETAILS
Sheet No. 5–8	PLAN
Sheet No. 9–10	SUMMARY OF QUANTITIES

NOTE: The Contractor shall possess a Class A or a Class C–12 license at the time this contract is awarded.

REGISTERED PROFESSIONAL ENGINEER
DAVID MENDOZA
No. 42581
CIVIL
STATE OF CALIFORNIA

David Mendoza
REGISTERED CIVIL ENGINEER

APPLICABLE STANDARD PLANS

A10A, A10B, D72, RSP A88A & T13

SAN JOAQUIN COUNTY IMPROVEMENT STANDARDS

CW–C3, CW–D14, CW–M3, CW–M5, CW–M7 & CW–R36

ABBREVIATIONS

SJCO Std = San Joaquin County Standard
CG&S = Curb, Gutter and Sidewalk
CY = Cubic Yards
LH = Lamphole
LF = Linear Feet
R&R = Remove and Replace
SY = Square Yards
SSMH = Sanitary Sewer Maintenance Hole

S.P. DRAWER FILE NO.

PROJECT ENGINEER	DATE	CHECKED	DATE	APPROVED	DATE

GENERAL NOTES

1. Prior to commencing any work, it shall be the Contractor's responsibility to have each utility company locate in the field their main and service lines. The Contractor shall notify the members of the Underground Service Alert (USA) 48 hours in advance of performing excavation work and/or sign relocation work by calling the toll-free number 1-800-227-2600 or 811.
2. The Contractor shall field verify all utility locations and depths. It shall be the Contractor's sole responsibility to protect all existing utilities, so that no damage results to them during the performance of this contract. The Contractor shall be required to cooperate with other Contractors and utility companies installing new structures, utilities, and services to the project.
3. Existing drainage facilities, water valves, frames and covers, water meters, trees, shrubs, curb, gutter and sidewalk shall remain in place unless otherwise noted on the plans.
4. All storm drain inlets shall be protected from liquid runoff sediment and chemical pollutant in a manner consistent with the requirements of the National Pollution Discharge Elimination System (NPDES) General Construction Permit. The storm drain protection units (catch basin filters) are to remain in place and functioning from the beginning of working days to the end of the project.
5. Due to the expansive nature of the soils and the historical near-surface groundwater levels in the project area, construction equipment will be limited to light weight graders/excavators and rollers, with minimal compaction of the subgrade to avoid heaving and pumping conditions. No truck traffic shall be allowed on the exposed subgrade at any time.
6. All Part Circle Culverts at driveways shall be removed and returned to residents if requested or Contractor will dispose. All associated asphalt concrete that has been placed over the curb, gutter and sidewalk and that has been shown to remain throughout the limits of work shall be removed and disposed. Payment for these shall be considered as included in the Clearing and Grubbing item of work.
7. During construction, the Contractor shall place temporary AC ramps to affected residents' driveways.
8. Hand grinding of existing asphalt concrete pavement will be required at locations where utility valves, maintenance holes and the lip of gutter at drain inlet locations are within the reconstruction work limits. Payment for hand grinding shall be considered as included in the Roadway Excavation item of work.
9. At locations where new Curb, Gutter and Sidewalk conforms to existing, the Curb, Gutter and Sidewalk shall be constructed with a doweled expansion joint.
10. All improvements within the Minor Concrete (Curb, Gutter and Sidewalk) work limits shall be saw cut or removed to the limits shown on the Plans. Payment for this shall be considered as paid for under the Minor Concrete (Curb, Gutter and Sidewalk) item of work.
11. Concrete driveways or walkways needing to conform to new back of walk elevations within the Minor Concrete (Driveway) work limits shall be saw cut and removed to the limits shown on the plans. Replaced driveway or walkway section shall match existing color, texture and finish. Payment for this shall be considered as paid for under the Minor Concrete (Driveway) item of work.
12. Curb, Gutter and Sidewalk replacement lengths, conform to existing Curb, Gutter and Sidewalk cross sections and existing flowline elevations (unless noted on the plans) with a straight grade between conforms. Expansion joints shall be placed at locations where new Curb, Gutter and Sidewalk conforms to existing Curb, Gutter and Sidewalk.
13. Sprinkler relocation as required for concrete work will be done by Contractor prior to sidewalk work. Payment for this shall be considered as included in the Minor Concrete (Curb, Gutter and Sidewalk) item of work.
14. The Contractor shall salvage Storm Drain Inlet Frames and Grates at the norhtwest corner of Inman Avenue and Princetion Avenue (Sta 10+39 left) and at the northeast corner of Inman Avenue and Princetion Avenue (Sta 10+52 right). The Contractor shall notify San Joaquin County Public Works Road Maintenance Division General Foreman Gordon Briseno at (209) 468-3074 (1810 East Hazelton Avenue, Stockton CA 95205) on how the cover and grates shall be salvaged.

LEGEND

- Existing Storm Drain Inlet to remain in place unless noted
- SS Existing Sanitary Sewer Maintenance Hole to remain in place unless noted
- LH Existing Lamphole to remain in place
- Existing Utility Pole to remain in place
- Existing Fire Hydrant to remain in place
- Existing Water Valve to be adjusted by other
- Areas of Curb, Gutter and Sidewalk Repair
- Existing Part Circle Culverts or Steel Plate Driveway Ramps
- Modify Curb Ramp and Retrofit Curb Ramp Detectable Warning Surface at Existing Curb Ramp per RSP A88A.
- WM Existing Water Meter Frame & Cover to remain in place

S.P. DRAWER FILE NO.

COUNTY OF SAN JOAQUIN	NO SCALE	GENERAL NOTES	INMAN AVENUE RECONSTRUCTION (Princeton Avenue to Mission Road)	Sheet No. 2 of 10

DRAWN BY	DATE	PROJECT ENGINEER	DATE	CHECKED	DATE
Juan Acevedo	2/13				

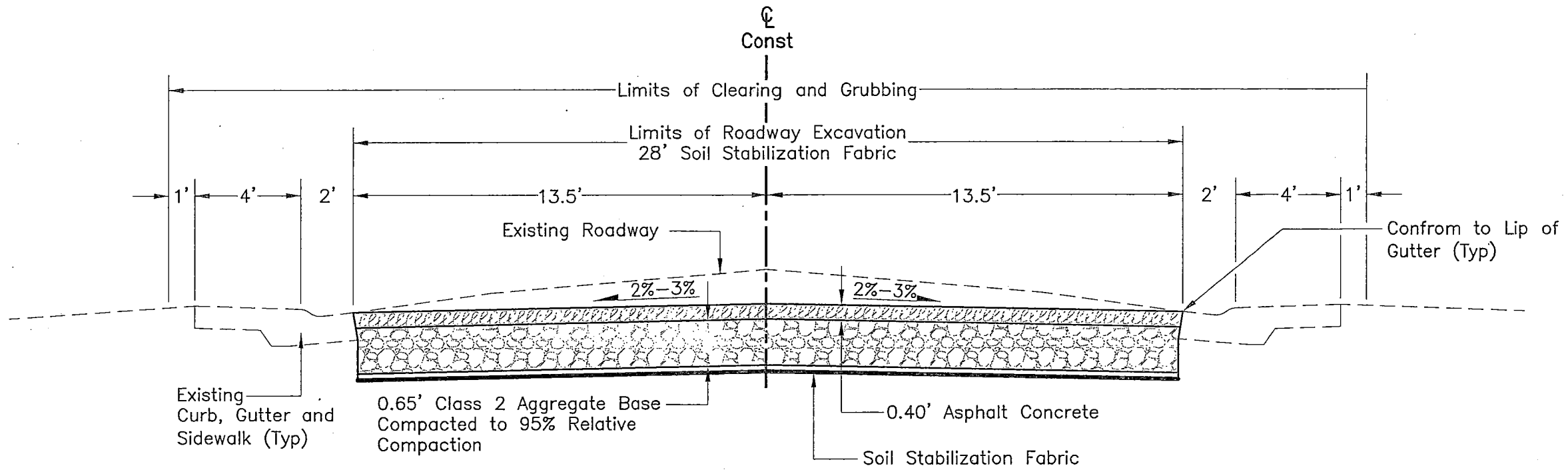

TYPICAL SECTION

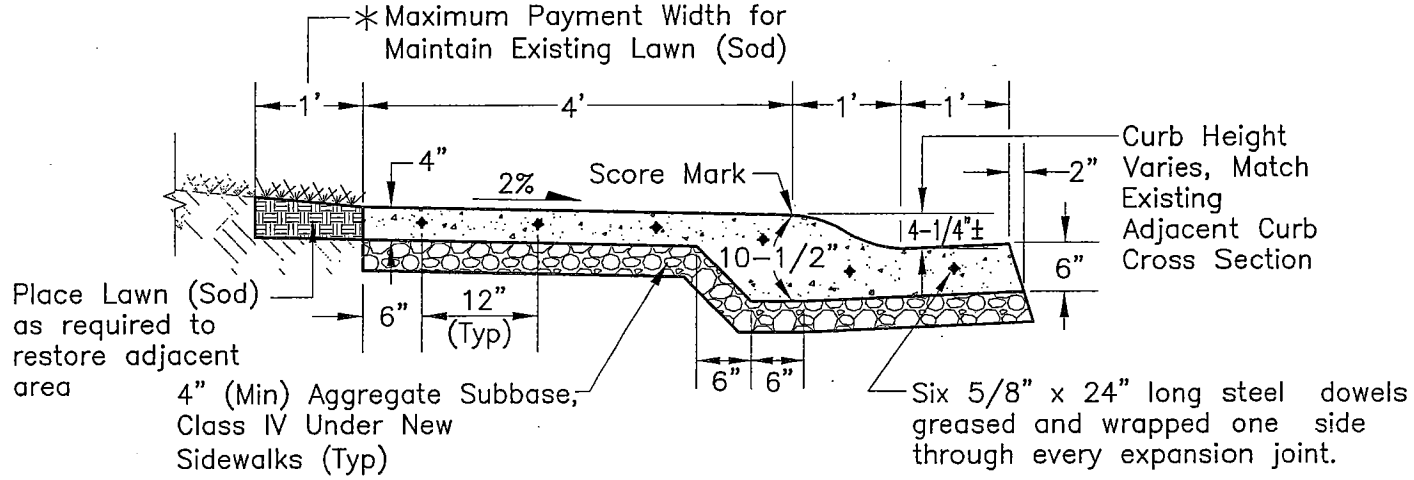

S TYPE CURB, GUTTER AND SIDEWALK DETAIL

Inman Avenue and Princeton Avenue
(Place Unless Noted on Plans)
*Damage to sprinklers shall be repaired within 48 hours

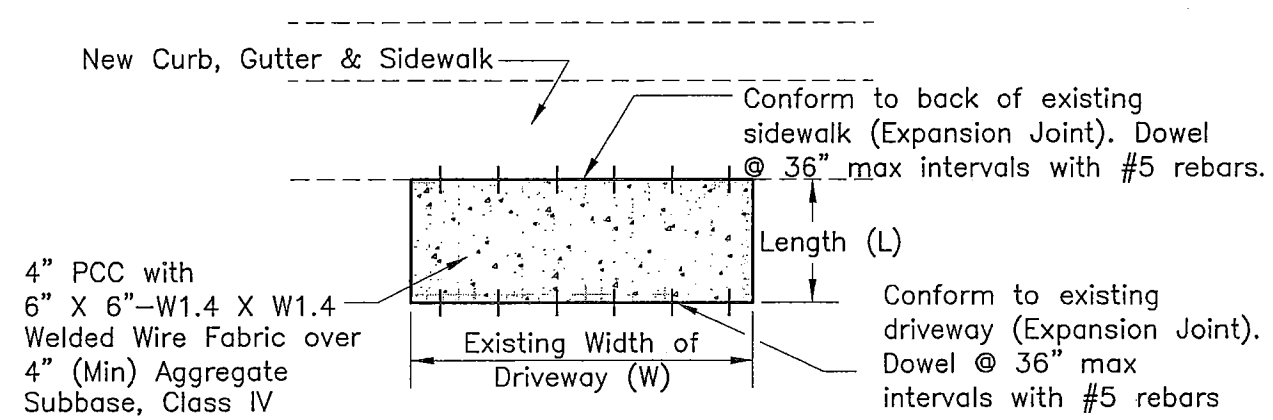

CONCRETE DRIVEWAY DETAIL

Plan View
See Summary of Quantities for Locations and Dimensions

S.P. DRAWER FILE NO.

COUNTY OF SAN JOAQUIN	NO SCALE	TYPICAL SECTION AND CONSTRUCTION DETAILS	INMAN AVENUE RECONSTRUCTION (Princeton Avenue to Mission Road)	Sheet No. 3 of 10

DRAWN BY	DATE	PROJECT ENGINEER	DATE	CHECKED	DATE
Juan Acevedo	2/13				

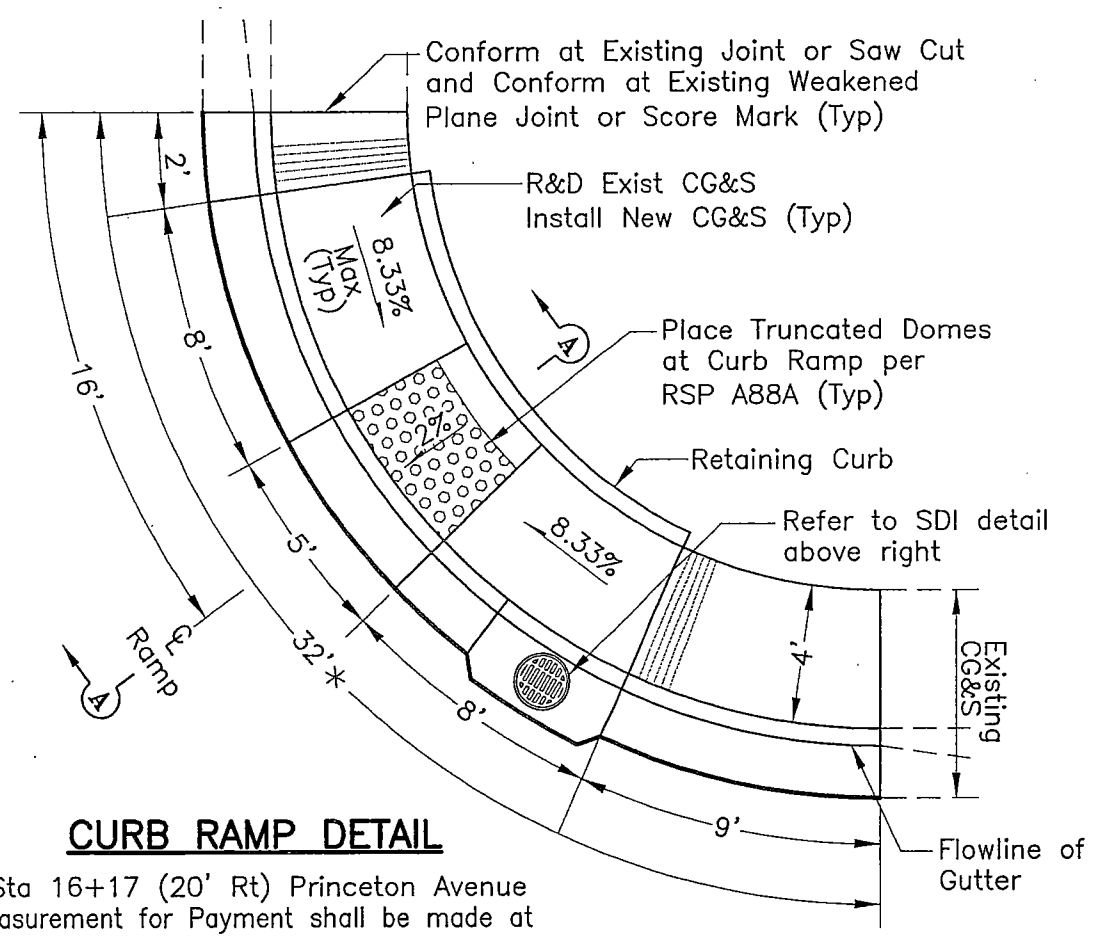

CURB RAMP DETAIL

*Sta 16+17 (20' Rt) Princeton Avenue
Measurement for Payment shall be made at Face of Curb (Flowline)

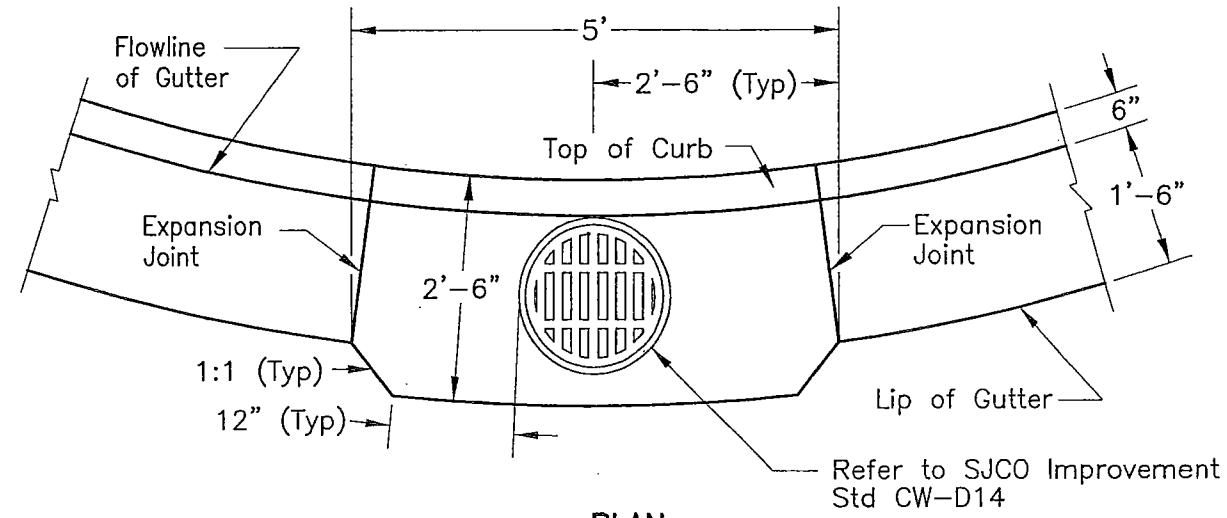

PLAN

CURB & GUTTER INSTALLATION FOR 18" STORM DRAIN INLET CATCHBASIN

Inman Avenue: Sta 10+39 (Left)
Inman Avenue: Sta 10+52 (Right)

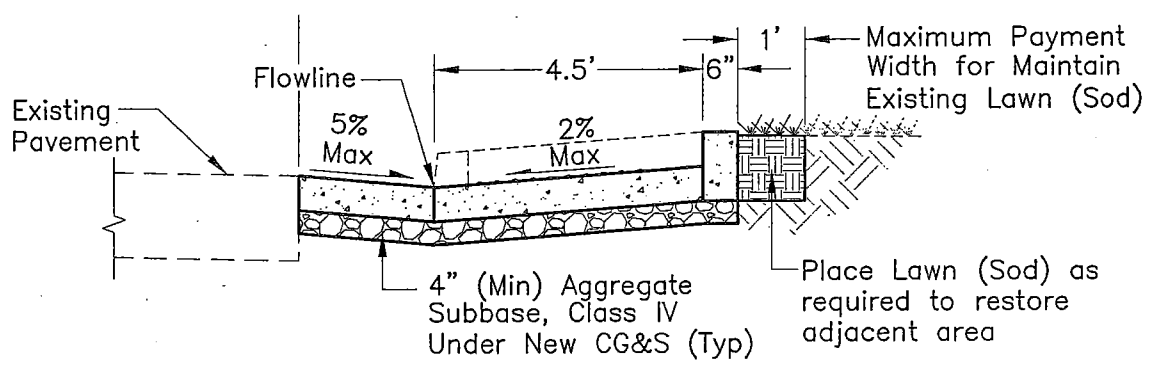

SECTION A-A

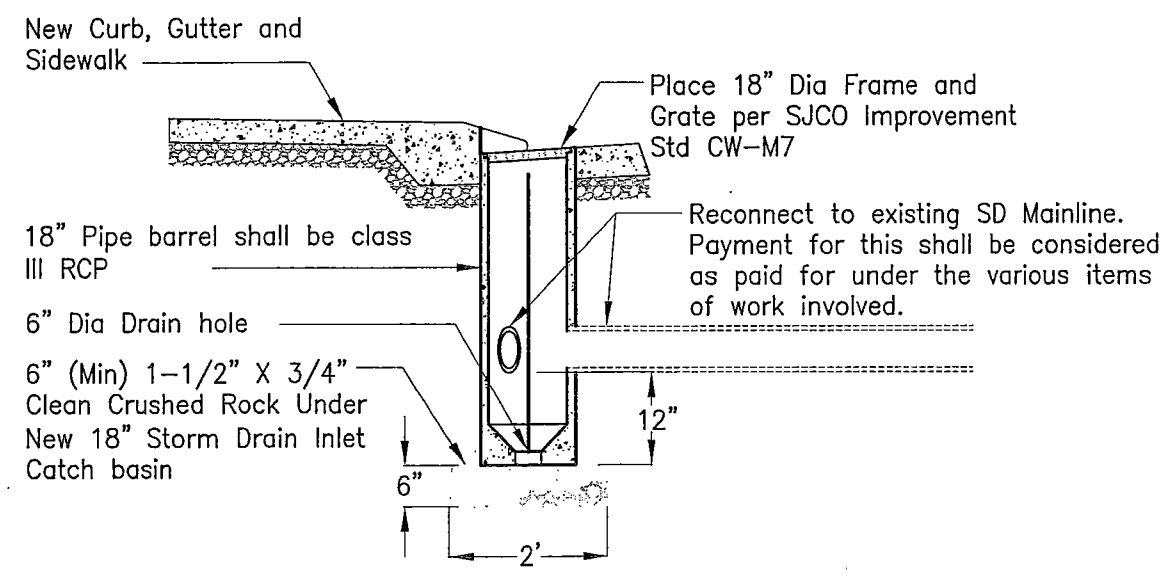

18" STORM DRAIN INLET CATCHBASIN DETAIL

Inman Avenue: Sta 10+39 (Left)
Inman Avenue: Sta 10+52 (Right)

S.P. DRAWER FILE NO.

COUNTY OF SAN JOAQUIN	NO SCALE	CONSTRUCTION DETAILS	INMAN AVENUE RECONSTRUCTION (Princeton Avenue to Mission Road)	Sheet No. 4 of 10

DRAWN BY	DATE	PROJECT ENGINEER	DATE	CHECKED	DATE
Juan Acevedo	2/13				

BEGIN RECONSTRUCTION

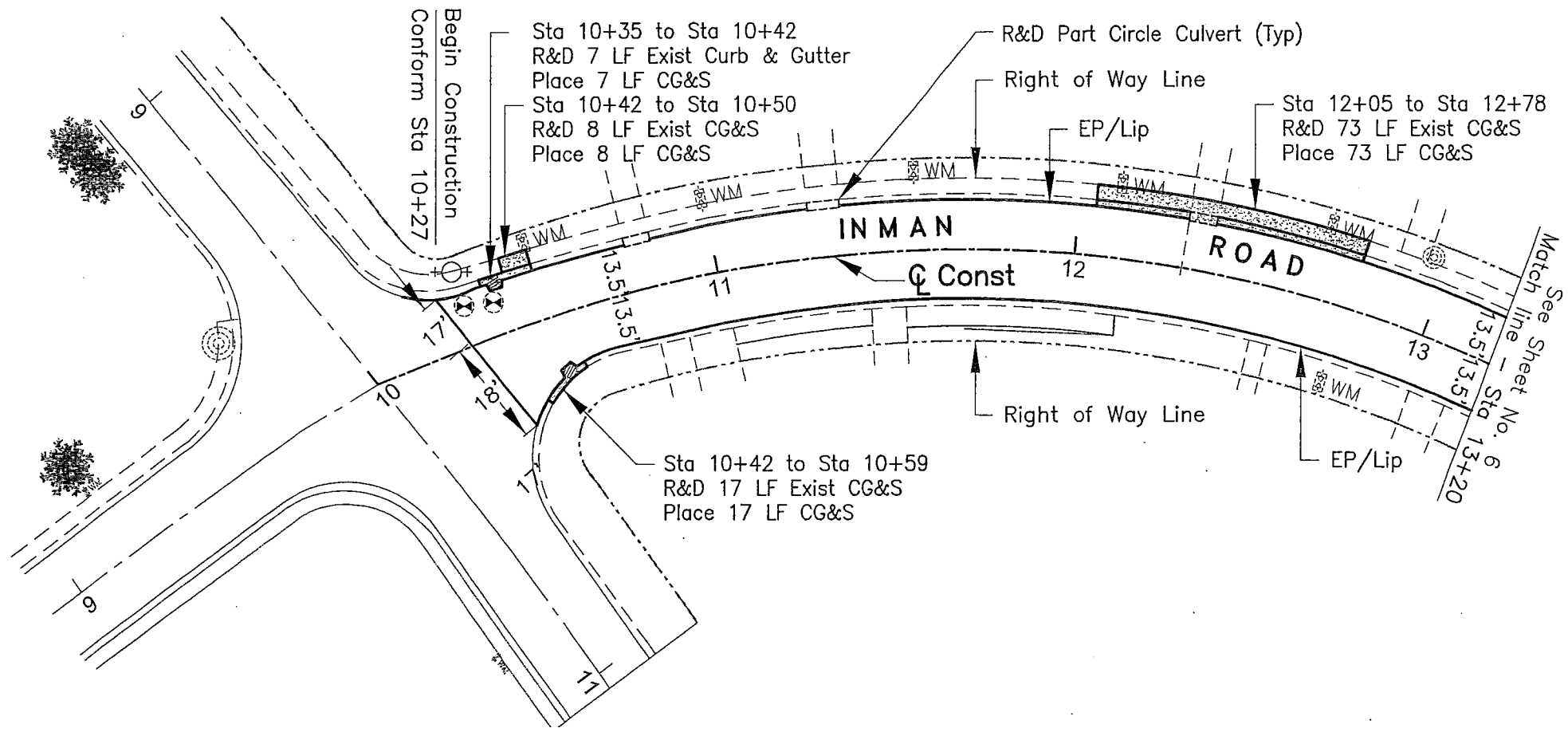

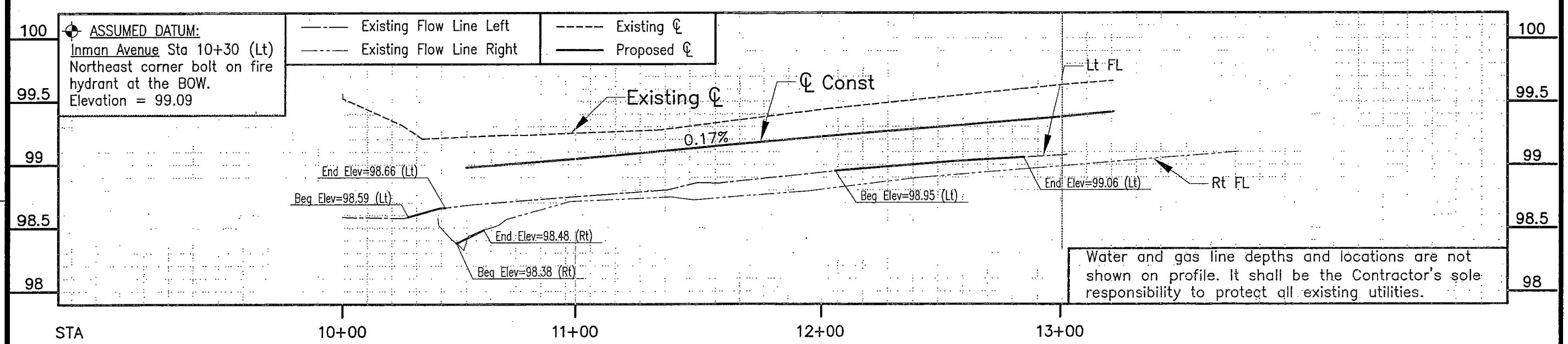

Water and gas line depths and locations are not shown on profile. It shall be the Contractor's sole responsibility to protect all existing utilities.

S.P. DRAWER FILE NO.

COUNTY OF SAN JOAQUIN	NO SCALE	PLAN AND PROFILE	INMAN AVENUE RECONSTRUCTION (Princeton Avenue to Mission Road)	Sheet No. 5 of 10

DRAWN BY	DATE	PROJECT ENGINEER	DATE	CHECKED	DATE
Juan Acevedo	2/13				

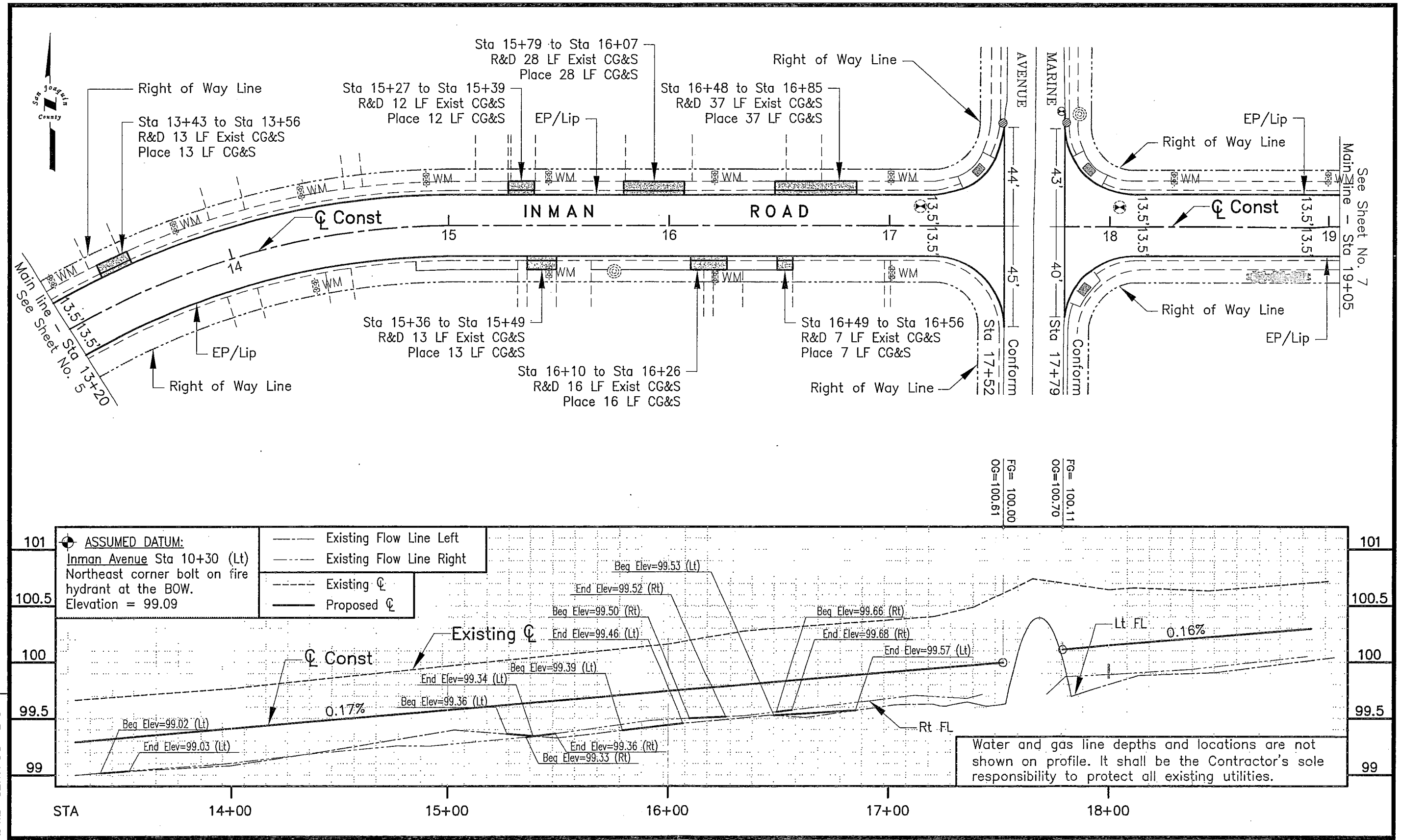

S.P. DRAWER FILE NO.

COUNTY OF SAN JOAQUIN	NO SCALE	PLAN AND PROFILE	INMAN AVENUE RECONSTRUCTION (Princeton Avenue to Mission Road)	Sheet No. 6 of 10

DRAWN BY	DATE	PROJECT ENGINEER	DATE	CHECKED	DATE
Juan Acevedo	2/13				

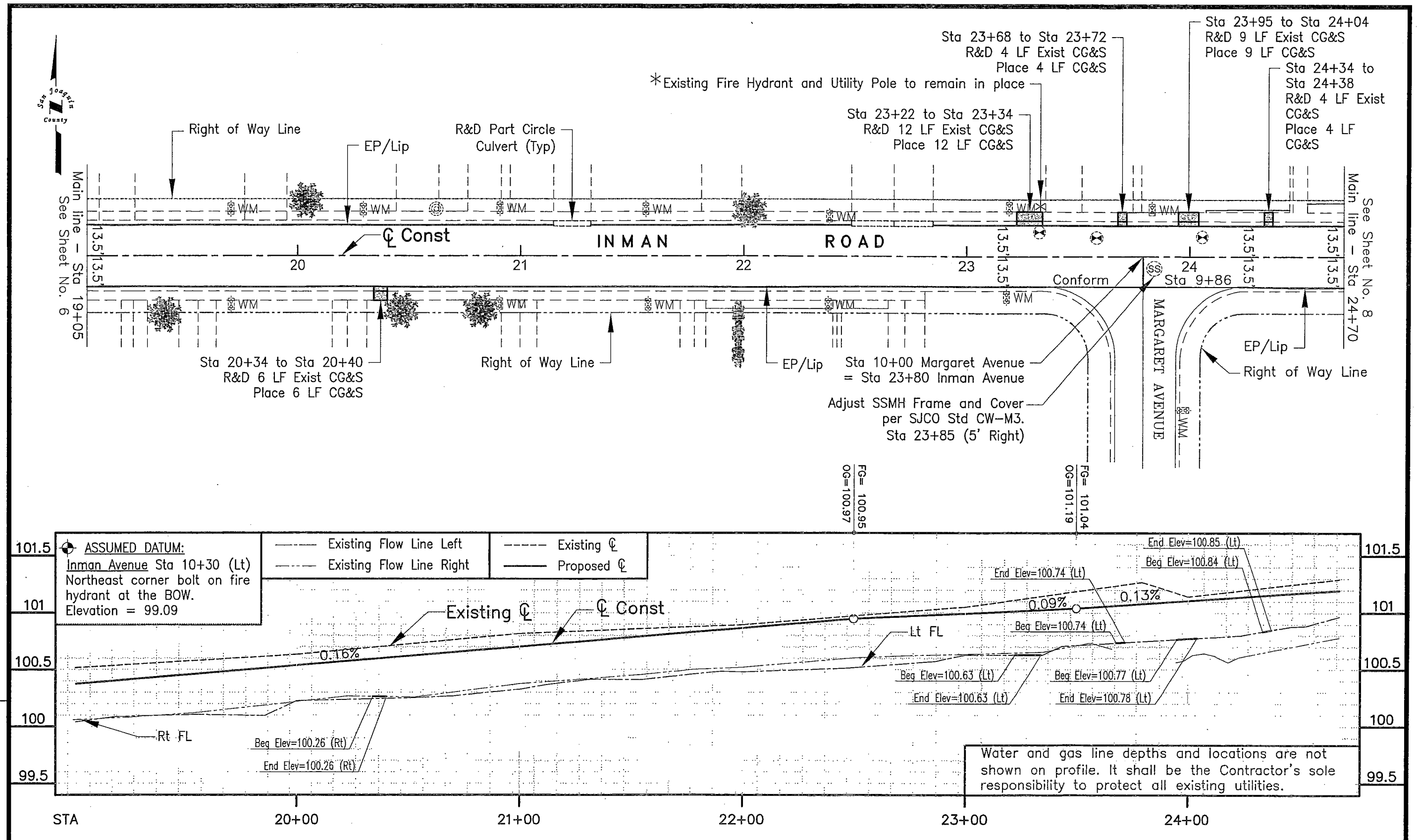

S.P. DRAWER FILE NO.

COUNTY OF SAN JOAQUIN	NO SCALE	PLAN AND PROFILE	INMAN AVENUE RECONSTRUCTION (Princeton Avenue to Mission Road)	Sheet No. 7 of 10

DRAWN BY	DATE	PROJECT ENGINEER	DATE	CHECKED	DATE
Juan Acevedo	2/13				

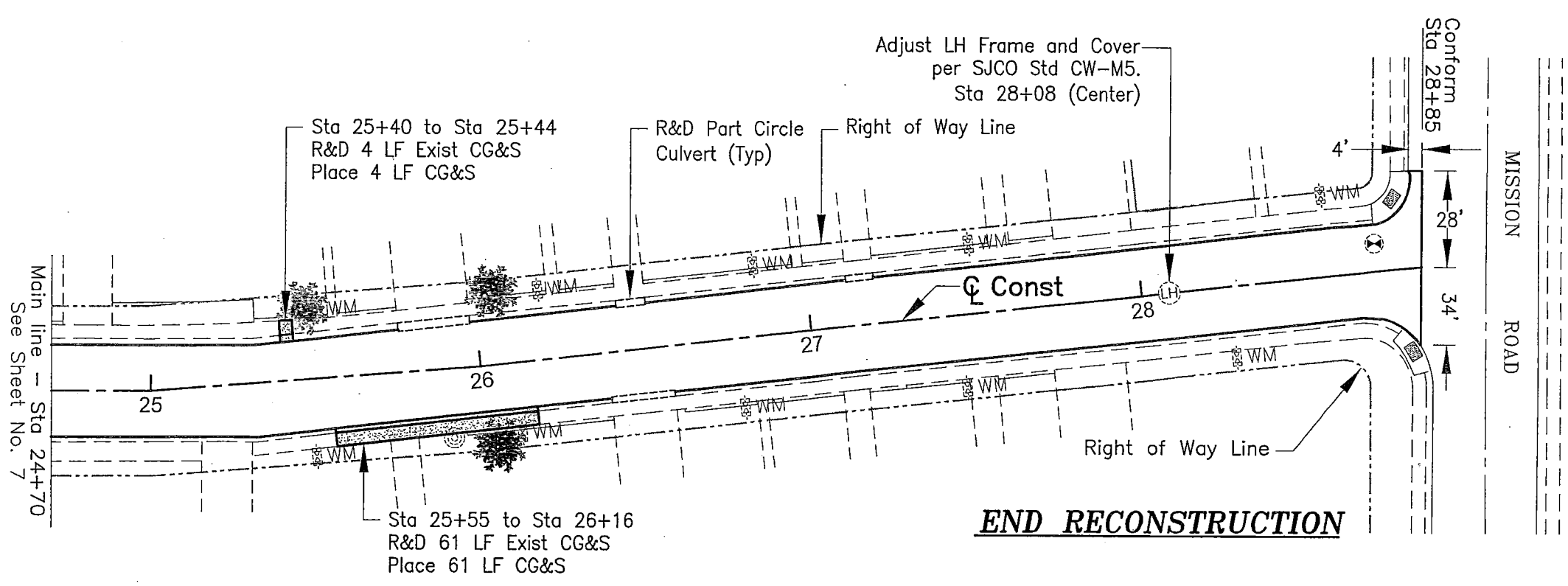

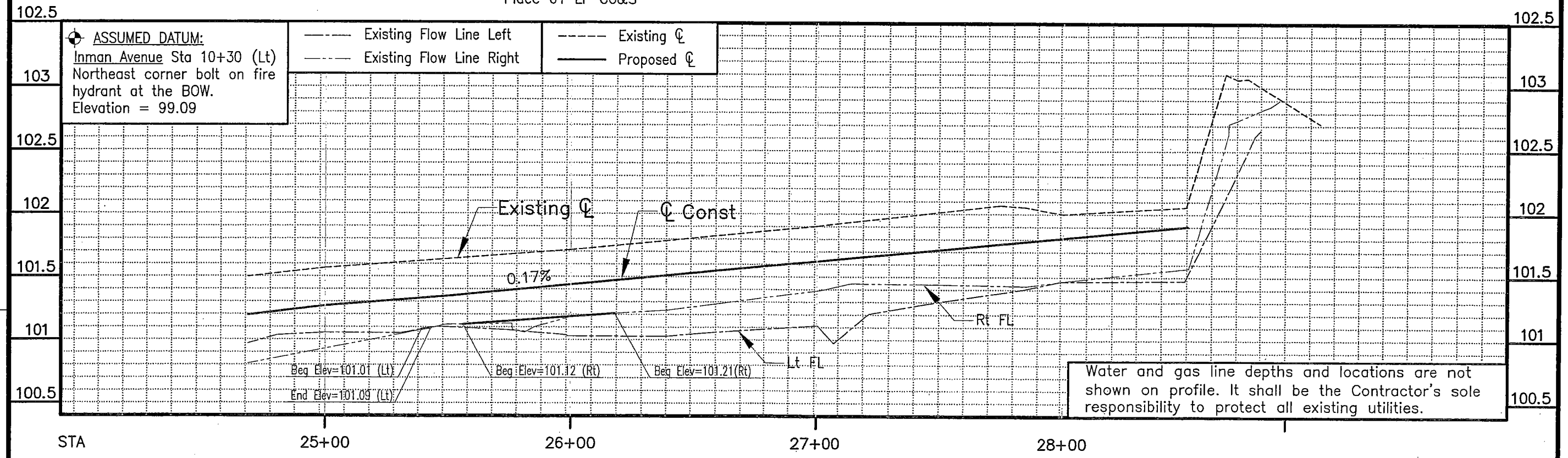

Water and gas line depths and locations are not shown on profile. It shall be the Contractor's sole responsibility to protect all existing utilities.

S.P. DRAWER FILE NO.

COUNTY OF SAN JOAQUIN	NO SCALE	PLAN AND PROFILE	INMAN AVENUE RECONSTRUCTION (Princeton Avenue to Mission Road)	Sheet No. 8 of 10

DRAWN BY	DATE	PROJECT ENGINEER	DATE	CHECKED	DATE
Juan Acevedo	2/13				

DUST CONTROL (NON–WORKING HOURS)

Hours	Quantity
15 Hours	15 Each
Total	15 Each

RETROFIT CURB RAMP DETECTABLE WARNING SURFACE

Location	Quantity
Sta 17+43 (24' Lt)	1 Each
Sta 17+88 (24' Lt)	1 Each
Total	2 Each

ADJUST FRAME AND COVER

Location	Quantity
Water Valves	
Sta 10+32 (13' Lt)	1 Each
Sta 10+39 (11' Lt)	1 Each
Sta 17+14 (9' Lt)	1 Each
Sta 18+04 (9' Lt)	1 Each
Sta 23+32 (11' Lt)	1 Each
Sta 23+58 (8' Lt)	1 Each
Sta 24+05 (9' Lt)	1 Each
Sta 28+69 (8' Lt)	1 Each
Lamp Hole	
Sta 28+08 (CL)	1 Each
Sanitary Sewer Maintenance Hole	
Sta 23+85 (5' Rt)	1 Each
Total	10 Each

ROADWAY EXCAVATION

Location	Quantity
Sta 10+27 to Sta 17+52	762 CY
Sta 17+79 to Sta 29+84	1,265 CY
Total	2,027 CY

MAINTAIN EXISTING LAWN (SOD)

Location	Quantity
Locations within Curb, Gutter and Sidewalk replacement areas.	
Various Locations	37 SQYD
Total	37 SQYD

CLASS 2 AGGREGATE BASE

Location	Quantity
Sta 10+16 to Sta 17+52	479 CY
Sta 17+79 to Sta 29+84	783 CY
Total	1,262 CY

ASPHALT CONCRETE (TYPE B)

Location	Quantity
Sta 10+16 to Sta 17+52	589 Ton
Sta 17+79 to Sta 29+84	964 Ton
Total	1,553 Ton

18" DIA. STORM DRAIN INLET

Location	Quantity
Sta 10+39 (14' Lt)	1 Each
Sta 10+52 (16' Rt)	1 Each
Total	2 Each

MINOR CONCRETE (CURB, GUTTER AND SIDEWALK)

Location	Quantity
Curb, Gutter, and Sidewalk	
Sta 10+42 to 10+50 (Lt)	8 LF
Sta 12+05 to 12+78 (Lt)	73 LF
Sta 13+43 to 13+56 (Lt)	13 LF
Sta 15+36 to 15+49 (Rt)	13 LF
Sta 15+27 to 15+39 (Lt)	12 LF
Sta 15+79 to 16+07 (Lt)	28 LF
Sta 16+10 to 16+26 (Rt)	16 LF
Sta 16+49 to 16+56 (Rt)	7 LF
Sta 16+48 to 16+85 (Lt)	37 LF
Sta 20+34 to 20+40 (Rt)	6 LF
Sta 23+22 to 23+34 (Lt)	12 LF
Sta 23+68 to 23+72 (Lt)	4 LF
Sta 23+95 to 24+04 (Lt)	9 LF
Sta 24+34 to 24+38 (Lt)	4 LF
Sta 25+40 to 25+44 (Lt)	4 LF
Sta 25+55 to 26+16 (Rt)	61 LF
Total	307 LF

S.P. DRAWER FILE NO.

COUNTY OF SAN JOAQUIN | NO SCALE | SUMMARY OF QUANTITIES | INMAN AVENUE RECONSTRUCTION (Princeton Avenue to Mission Road) | Sheet No. 9 of 10

DRAWN BY	DATE	PROJECT ENGINEER	DATE	CHECKED	DATE
Juan Acevedo	2/13				

MINOR CONCRETE (CURB AND GUTTER)

Location	Quantity
Curb and Gutter	
Sta 10+35 to 10+42 (Lt)	7 LF
Sta 10+42 to 10+59 (Rt)	17 LF
Total	24 LF

MINOR CONCRETE (DRIVEWAY)

Location	Quantity
Curb and Gutter	
Sta 15+79 to 16+11 (Lt)	18 LF
Sta 25+71 to 25+80 (Rt)	4 LF
Total	22 LF

18" DIA. FRAME AND GRATE

Location	Quantity
Sta 10+39 (14' Lt)	1 Each
Sta 10+52 (16' Rt)	1 Each
Total	2 Each

SOIL STABILIZATION FABRIC

Location	Quantity
Sta 10+16 to Sta 17+52	2,208 SQYD
Sta 17+79 to Sta 29+84	3,615 SQYD
Total	5,823 SQYD

S.P. DRAWER FILE NO.

COUNTY OF SAN JOAQUIN | NO SCALE | SUMMARY OF QUANTITIES | INMAN AVENUE RECONSTRUCTION (Princeton Avenue to Mission Road) | Sheet No. 10 of 10

DRAWN BY	DATE	PROJECT ENGINEER	DATE	CHECKED	DATE
Juan Acevedo	2/13				