COUNTY OF SAN JOAQUIN

DEPARTMENT OF PUBLIC WORKS
P.O. BOX 1810-1810 E. HAZELTON AVENUE
STOCKTON, CALIFORNIA 95201
(209) 468-3000
FAX # (209) 468-9324

Permit No: **PS-1301685**
Date Issued: 06/24/2013
Exp. Date: 10/01/2013
Project No: PWP730052
Quad: SE
Extended To: 12/01/2013
UE/CR/PM NO:41617922

ENCROACHMENT PERMIT

To: PACIFIC GAS & ELECTRIC - SAN RAMON
6121 BOLLINGER CANYON ROAD
SAN RAMON, CA 94583

RIDER # 2
Date 10/21/13

Encroachment Type:

(2)-Bell Holes			

Location:
N/S OF WEST RIPON RD. 900' E/O FREDERICK RD.

In compliance with your request of **06/24/2013**, permission is hereby granted to do work in County right-of-way as shown on attached application and subject to all the terms, conditions and restrictions written below or printed as general or special provisions on any part of this form. See reverse side and attached sheet, if any.

Trench excavations for service connections will not be permitted within ten feet (10') of pavement centerline unless otherwise approved by the Director. Surface of trench patches shall match in kind and be smooth and even with that of abutting surface. Special attention shall be given to depth of utilities through roadside area in anticipation of future drainage facilities, road profile and/or frontage development. All underground utility facilities are to be established and accurately dimensioned on sketches from surveyed centerline of road right of way, or from right of way (border) lines.

mittee shall call the Department of Public Works, Field Engineering Division (Permit Inspections) at (209)953-7421 at least ty-eight hours prior to beginning any work within the County right of way. All work performed under this permit shall conform to the rules and regulations pertaining to safety established by the California Division of Industrial Safety and Cal-OSHA.

The jobsite shall be kept in a safe condition at all times by the daily removal of any excess dirt or debris which might be a hazard to either pedestrian or automobile traffic. All necessary traffic convenience and warning devices and personnel shall be provided, placed and maintained by and at the sole expense of the Permittee in accordance with the latest edition of the CALTRANS Manual of Traffic Control.

After completion of the work permitted herein, all debris, lumber, barricades, or any excess material shall be removed and the jobsite left in a neat workmanlike manner. Immediately following completion of construction permitted herein, Permittee shall fill out and mail notice of completion (see attached post card) provided by Grantor.

Special Comments:

Traffic Control Per MUTCD****Contractor shall keep sign spacing @ 55 mph per MUTCD****See Attached "Special Conditions"****

FORMS:

SS/WW, R-29	Trench Cutting	Policy

Est. Permit Fee: $526.00

THOMAS M. GAU, Director
Department of Public Works

By: _____
Permit Section

WHITE	-Permitee
GOLDENROD	-PWD Central File
YELLOW	-Field Inspection
PINK	-Permit Section

ENCROACHMENT PERMIT GENERAL PROVISIONS

13-1

1. This permit is issued under and subject to all laws and ordinances of agencies governing the encroachment herein permitted. See the following references:
   STREETS AND HIGHWAYS CODE
   1. Division 1, Chapter 3
   2. Division 2, Chapter 2, Section 942
   3. Division 2, Chapter 4, Section 1126
   4. Division 2, Chapter 5.5 and Chapter 6

   SAN JOAQUIN COUNTY ORDINANCES NUMBERED: 324, 441, 648, 662, 672, 695, 700, 860, 892, 3359, and 3675.

2. It is understood and agreed by the Permittee that the performance of any work under this permit shall constitute an acceptance of all the provisions contained herein and failure on the Permittee's part to comply with any provision will be cause for revocation of this permit. Except as otherwise provided for public agencies and franchise holders, this permit is revocable on five days notice.

3. All work shall be done subject to the supervision of and the satisfaction of the grantor. The Permittee shall at all times during the progress of the work keep the County Highway in as neat and clean condition as is possible and upon completion of the work authorized herein, shall leave the County Highway in a thoroughly neat, clean and usable condition.

4. The Permittee also agrees by the acceptance of this permit to properly maintain any encroachment structure placed by the Permittee on any part of the County Highway and to immediately repair any damage to any portion of the highway, which occurs as a result of the maintenance of the said encroachment structure, until such time as the Permittee may be relieved of the responsibility for such maintenance by the County of San Joaquin.

5. The Permittee also agrees by the acceptance of this permit to make, at its own expense, such repairs as may be deemed necessary by the County Department of Public Works.

6. It is further agreed by the Permittee that whenever construction, reconstruction or maintenance work upon the highway is necessary, the installation provided for herein shall, upon request of the County Department of Public Works, be immediately moved or removed by and at the sole expense of the Permittee.

7. No material used for fill or backfill in the construction of the encroachment shall be borrowed or taken from within the County right of way.

8. All work shall be planned and carried out with as little inconvenience as possible to the traveling public. No material shall be stacked within eight feet (8') of the edge of the pavement or traveled way unless otherwise provided herein. Adequate provision shall be made for the protection of the traveling public. Traffic control standards shall be utilized including barricades; approved signs and lights; and flagmen, as required by the particular work in progress.

9. The Permittee, by the acceptance of this permit, shall assume full responsibility for all liability for personal injury or damage to property which may arise out of the work herein permitted or which may arise out of the failure of the part of the Permittee to properly perform the work provided under this permit. In the event any claim of such liability is made against the County of San Joaquin or any department, official or employee thereof, the Permittee shall defend, indemnify, and hold each of them harmless for such claim.

10. All backfill material is to be moistened as necessary and thoroughly compacted with mechanical means. If required by the County Director of Public Works, such backfill shall consist of gravel or crushed rock. The Permittee shall maintain the surface over structures placed hereunder as may be necessary to insure the return of the roadway to a completely stable condition and until relieved of such responsibility by the County Department of Public Works. Wherever a gravel, crushed rock or asphalt surface is removed or damaged in the course of work related to the permitted encroachment, such material shall either be separately stored and replaced in the roadway as nearly as possible in its original state or shall be replaced in kind, and the roadway shall be left in at least as good a condition as it was before the commencement of operations of placing the encroachment structure.

11. Whenever it becomes necessary to secure permission from abutting property owners for the proposed work, such authority must be secured by the Permittee prior to starting work.

12. The current and future safety and convenience of the traveling public shall be given every consideration in the location and methods of construction utilized.

13. The Permittee is responsible for the preservation of survey monuments within the work herein permitted. If any are disturbed, the Permittee is required to tie out each location and re-establish them after completion of work, using a licensed land surveyor. A corner record must be filed in accordance with state law for any re-set monuments.

COUNTY OF SAN JOAQUIN

DEPARTMENT OF PUBLIC WORKS
P.O. BOX 1810-1810 E. HAZELTON AVENUE
STOCKTON, CALIFORNIA 95201
(209) 468-3000
FAX # (209) 468-9324

Permit No: **PS-1301685**
Date Issued: 06/24/2013
Exp. Date: 10/01/2013
Project No: PWP730052
Quad: SE
Extended To: 11/01/2013
UE/CR/PM NO:41617922

ENCROACHMENT PERMIT

To: PACIFIC GAS & ELECTRIC - SAN RAMON
6121 BOLLINGER CANYON ROAD
SAN RAMON, CA 94583

RIDER # 1
Date 10/4/13

Encroachment Type:

(2)-Bell Holes			

Location:
N/S OF WEST RIPON RD. 900' E/O FREDERICK RD.

In compliance with your request of **06/24/2013**, permission is hereby granted to do work in County right-of-way as shown on attached application and subject to all the terms, conditions and restrictions written below or printed as general or special provisions on any part of this form. See reverse side and attached sheet, if any.

Trench excavations for service connections will not be permitted within ten feet (10') of pavement centerline unless otherwise approved by the Director. Surface of trench patches shall match in kind and be smooth and even with that of abutting surface. Special attention shall be given to depth of utilities through roadside area in anticipation of future drainage facilities, road profile and/or frontage development. All underground utility facilities are to be established and accurately dimensioned on sketches from surveyed centerline of road right of way, or from right of way (border) lines.

nittee shall call the Department of Public Works, Field Engineering Division (Permit Inspections) at (209)953-7421 at least forty-eight hours prior to beginning any work within the County right of way. All work performed under this permit shall conform to the rules and regulations pertaining to safety established by the California Division of Industrial Safety and Cal-OSHA.

The jobsite shall be kept in a safe condition at all times by the daily removal of any excess dirt or debris which might be a hazard to either pedestrian or automobile traffic. All necessary traffic convenience and warning devices and personnel shall be provided, placed and maintained by and at the sole expense of the Permittee in accordance with the latest edition of the CALTRANS Manual of Traffic Control.

After completion of the work permitted herein, all debris, lumber, barricades, or any excess material shall be removed and the jobsite left in a neat workmanlike manner. Immediately following completion of construction permitted herein, Permittee shall fill out and mail notice of completion (see attached post card) provided by Grantor.

Special Comments:

Traffic Control Per MUTCD****Contractor shall keep sign spacing @ 55 mph per MUTCD****See Attached "Special Conditions"****

FORMS:

SS/WW, R-29	Trench Cutting	Policy

Est. Permit Fee: $526.00

THOMAS M. GAU, Director
Department of Public Works

By: _____
Permit Section

WHITE	-Permitee
GOLDENROD	-PWD Central File
YELLOW	-Field Inspection
PINK	-Permit Section

ENCROACHMENT PERMIT GENERAL PROVISIONS

13-1

1. This permit is issued under and subject to a11 1aws and ordinances of agencies governing the encroachment herein permitted. See the following references:
   STREETS AND HIGHWAYS CODE
   1. Division 1, Chapter 3
   2. Division 2, Chapter 2, Section 942
   3. Division 2, Chapter 4, Section 1126
   4. Division 2, Chapter 5.5 and Chapter 6

   SAN JOAQUIN COUNTY ORDINANCES NUMBERED: 324, 441, 648, 662, 672, 695, 700, 860, 892, 3359, and 3675.

2. It is understood and agreed by the Permittee that the performance of any work under this permit shall constitute an acceptance of all the provisions contained herein and failure on the Permittee's part to comply with any provision will be cause for revocation of this permit. Except as otherwise provided for public agencies and franchise holders, this permit is revocable on five days notice.

3. All work shall be done subject to the supervision of and the satisfaction of the grantor. The Permittee shall at all times during the progress of the work keep the County Highway in as neat and clean condition as is possible and upon completion of the work authorized herein, shall leave the County Highway in a thoroughly neat, clean and usable condition.

4. The Permittee also agrees by the acceptance of this permit to properly maintain any encroachment structure placed by the Permittee on any part of the County Highway and to immediately repair any damage to any portion of the highway, which occurs as a result of the maintenance of the said encroachment structure, until such time as the Permittee may be relieved of the responsibility for such maintenance by the County of San Joaquin.

5. The Permittee also agrees by the acceptance of this permit to make, at its own expense, such repairs as may be deemed necessary by the County Department of Public Works.

6. It is further agreed by the Permittee that whenever construction, reconstruction or maintenance work upon the highway is necessary, the installation provided for herein shall, upon request of the County Department of Public Works, be immediately moved or removed by and at the sole expense of the Permittee.

7. No material used for fill or backfill in the construction of the encroachment shall be borrowed or taken from within the County right of way.

8. All work shall be planned and carried out with as little inconvenience as possible to the traveling public. No material shall be stacked within eight feet (8') of the edge of the pavement or traveled way unless otherwise provided herein. Adequate provision shall be made for the protection of the traveling public. Traffic control standards shall be utilized including barricades; approved signs and lights; and flagmen, as required by the particular work in progress.

9. The Permittee, by the acceptance of this permit, shall assume full responsibility for all liability for personal injury or damage to property which may arise out of the work herein permitted or which may arise out of the failure of the part of the Permittee to properly perform the work provided under this permit. In the event any claim of such liability is made against the County of San Joaquin or any department, official or employee thereof, the Permittee shall defend, indemnify, and hold each of them harmless for such claim.

10. All backfill material is to be moistened as necessary and thoroughly compacted with mechanical means. If required by the County Director of Public Works, such backfill shall consist of gravel or crushed rock. The Permittee shall maintain the surface over structures placed hereunder as may be necessary to insure the return of the roadway to a completely stable condition and until relieved of such responsibility by the County Department of Public Works. Wherever a gravel, crushed rock or asphalt surface is removed or damaged in the course of work related to the permitted encroachment, such material shall either be separately stored and replaced in the roadway as nearly as possible in its original state or shall be replaced in kind, and the roadway shall be left in at least as good a condition as it was before the commencement of operations of placing the encroachment structure.

11. Whenever it becomes necessary to secure permission from abutting property owners for the proposed work, such authority must be secured by the Permittee prior to starting work.

12. The current and future safety and convenience of the traveling public shall be given every consideration in the location and methods of construction utilized.

13. The Permittee is responsible for the preservation of survey monuments within the work herein permitted. If any are disturbed, the Permittee is required to tie out each location and re-establish them after completion of work, using a licensed land surveyor. A corner record must be filed in accordance with state law for any re-set monuments.

COUNTY OF SAN JOAQUIN

DEPARTMENT OF PUBLIC WORKS

P.0. BOX 1810-1810 E. HAZELTON AVENUE
STOCKTON, CALIFORNIA 95201
(209) 468-3000
FAX # (209) 468-9324

Permit No: **PS-1301685**
Date Issued: 06/24/2013
Exp. Date: 10/01/2013
Project No: PWP730052
Quad: SE

UE/CR/PM NO:41617922

ENCROACHMENT PERMIT

To: PACIFIC GAS & ELECTRIC - SAN RAMON
6121 BOLLINGER CANYON ROAD
SAN RAMON, CA 94583

Encroachment Type:

(2)-Bell Holes			

Location:
N/S OF WEST RIPON RD. 900' E/O FREDERICK RD.

In compliance with your request of **06/24/2013**, permission is hereby granted to do work in County right-of-way as shown on attached application and subject to all the terms, conditions and restrictions written below or printed as general or special provisions on any part of this form. See reverse side and attached sheet, if any.

Trench excavations for service connections will not be permitted within ten feet (10') of pavement centerline unless otherwise approved by the Director. Surface of trench patches shall match in kind and be smooth and even with that of abutting surface. Special attention shall be given to depth of utilities through roadside area in anticipation of future drainage facilities, road profile and/or frontage development. All underground utility facilities are to be established and accurately dimensioned on sketches from surveyed centerline of road right of way, or from right of way (border) lines.

mittee shall call the Department of Public Works, Field Engineering Division (Permit Inspections) at (209)953-7421 at least ty-eight hours prior to beginning any work within the County right of way. All work performed under this permit shall conform to the rules and regulations pertaining to safety established by the California Division of Industrial Safety and Cal-OSHA.

The jobsite shall be kept in a safe condition at all times by the daily removal of any excess dirt or debris which might be a hazard to either pedestrian or automobile traffic. All necessary traffic convenience and warning devices and personnel shall be provided, placed and maintained by and at the sole expense of the Permittee in accordance with the latest edition of the CALTRANS Manual of Traffic Control.

After completion of the work permitted herein, all debris, lumber, barricades, or any excess material shall be removed and the jobsite left in a neat workmanlike manner. Immediately following completion of construction permitted herein, Permittee shall fill out and mail notice of completion (see attached post card) provided by Grantor.

Special Comments:

Traffic Control Per MUTCD****Contractor shall keep sign spacing @ 55 mph per MUTCD****See Attached "Special Conditions"****

FORMS:

SS/WW, R-29	Trench Cutting	Policy

Est. Permit Fee: $526.00

THOMAS M. GAU, Director
Department of Public Works

By: _____
Permit Section

WHITE	-Permitee
GOLDENROD	-PWD Central File
YELLOW	-Field Inspection
PINK	-Permit Section

ENCROACHMENT PERMIT GENERAL PROVISIONS

13-1

1. This permit is issued under and subject to all laws and ordinances of agencies governing the encroachment herein permitted. See the following references:
   STREETS AND HIGHWAYS CODE
   1. Division 1, Chapter 3
   2. Division 2, Chapter 2, Section 942
   3. Division 2, Chapter 4, Section 1126
   4. Division 2, Chapter 5.5 and Chapter 6

   SAN JOAQUIN COUNTY ORDINANCES NUMBERED: 324, 441, 648, 662, 672, 695, 700, 860, 892, 3359, and 3675.

2. It is understood and agreed by the Permittee that the performance of any work under this permit shall constitute an acceptance of all the provisions contained herein and failure on the Permittee's part to comply with any provision will be cause for revocation of this permit. Except as otherwise provided for public agencies and franchise holders, this permit is revocable on five days notice.

3. All work shall be done subject to the supervision of and the satisfaction of the grantor. The Permittee shall at all times during the progress of the work keep the County Highway in as neat and clean condition as is possible and upon completion of the work authorized herein, shall leave the County Highway in a thoroughly neat, clean and usable condition.

4. The Permittee also agrees by the acceptance of this permit to properly maintain any encroachment structure placed by the Permittee on any part of the County Highway and to immediately repair any damage to any portion of the highway, which occurs as a result of the maintenance of the said encroachment structure, until such time as the Permittee may be relieved of the responsibility for such maintenance by the County of San Joaquin.

5. The Permittee also agrees by the acceptance of this permit to make, at its own expense, such repairs as may be deemed necessary by the County Department of Public Works.

6. It is further agreed by the Permittee that whenever construction, reconstruction or maintenance work upon the highway is necessary, the installation provided for herein shall, upon request of the County Department of Public Works, be immediately moved or removed by and at the sole expense of the Permittee.

7. No material used for fill or backfill in the construction of the encroachment shall be borrowed or taken from within the County right of way.

8. All work shall be planned and carried out with as little inconvenience as possible to the traveling public. No material shall be stacked within eight feet (8') of the edge of the pavement or traveled way unless otherwise provided herein. Adequate provision shall be made for the protection of the traveling public. Traffic control standards shall be utilized including barricades; approved signs and lights; and flagmen, as required by the particular work in progress.

9. The Permittee, by the acceptance of this permit, shall assume full responsibility for all liability for personal injury or damage to property which may arise out of the work herein permitted or which may arise out of the failure of the part of the Permittee to properly perform the work provided under this permit. In the event any claim of such liability is made against the County of San Joaquin or any department, official or employee thereof, the Permittee shall defend, indemnify, and hold each of them harmless for such claim.

10. All backfill material is to be moistened as necessary and thoroughly compacted with mechanical means. If required by the County Director of Public Works, such backfill shall consist of gravel or crushed rock. The Permittee shall maintain the surface over structures placed hereunder as may be necessary to insure the return of the roadway to a completely stable condition and until relieved of such responsibility by the County Department of Public Works. Wherever a gravel, crushed rock or asphalt surface is removed or damaged in the course of work related to the permitted encroachment, such material shall either be separately stored and replaced in the roadway as nearly as possible in its original state or shall be replaced in kind, and the roadway shall be left in at least as good a condition as it was before the commencement of operations of placing the encroachment structure.

11. Whenever it becomes necessary to secure permission from abutting property owners for the proposed work, such authority must be secured by the Permittee prior to starting work.

12. The current and future safety and convenience of the traveling public shall be given every consideration in the location and methods of construction utilized.

13. The Permittee is responsible for the preservation of survey monuments within the work herein permitted. If any are disturbed, the Permittee is required to tie out each location and re-establish them after completion of work, using a licensed land surveyor. A corner record must be filed in accordance with state law for any re-set monuments.

SPECIAL CONDITIONS FOR PG&E-WEST RIPON RD.-PM 41617922 ENCROACHMENT PERMIT

1. Maintain traffic controls for all roads. Traffic control delays shall not exceed 15 minutes. Two-way traffic shall be maintained during non-working hours with excavated areas backfilled or plated. During working hours, two-way traffic control shall be maintained with one lane open and appropriate flaggers.

2. No working within the actual roadway (travelled-way) between the hours of 6:00 a.m. to 9:00 a.m. and 3:00 p.m. to 6:00 p.m. Working within the shoulder of the right-of-way is allowed, as long as the traffic is not interfered with, during these hours.

3. Access to all properties shall be maintained at all times except when work is occurring at the access point. Minimal delays will be allowed to provide access within the work zone area. Driveway access shall be fully restored at the end of each workday. Driveways disturbed by the contractor shall be replaced with in-kind or better materials.

4. Residents and businesses shall be notified of the work schedule in writing, as approved by the County, 48-hours in advance of any impacts to their access.

5. Any areas where parking is to be restricted shall have signs noticing the time period placed at least 48 hours in advance of the work.

6. West Ripon Road was resurfaced in 2010 with rubberized asphalt concrete. Pacific Gas & Electric (PG&E) shall make every effort to ensure the reliability of the pavement and not intrude into the pavement any further than required per PG&E letter, dated February 28, 2012.

7. The contractor shall use San Joaquin County Standard R-29 when backfilling trenches within the County right-of-way. PG&E shall repair any damaged pavement using the same materials as currently in place. PG&E will ensure rubberized asphalt is used in all of their repairs.

8. All pipe and pipeline related facilities including, but not limited to, valves, utility boxes and vaults, and frames and covers shall be maintained by PG&E. PG&E shall be responsible for any and all costs associated with the relocation and/or adjustment of these facilities as determined by the County at PG&E's expense. (Streets and Highways Code 1463)

9. All future maintenance of the pipeline and related facilities within the County right-of-way will require a San Joaquin County Encroachment Permit.

10. Bell holes shall be maintained in a smooth and even condition to the satisfaction of the County throughout the project limits at all times.

11. All bell holes shall be completely backfilled or shored and plated at the end of each workday, and the roadway restored to two-way traffic. If plating is to be used, a bell hole shoring and plating plan suitable for traffic loadings shall be prepared by a registered civil engineer and submitted for prior approval by the County.

12. Contractor shall establish existing roadway and drainage grades within the construction area. Any repair to roadways and adjacent areas shall match existing grades. Any proposed grade changes shall receive prior approval from County.

13. Roadway areas subject to pavement cuts shall receive a 0.12-foot rubberized asphalt concrete overlay from the centerline (or lane line) to the edge of the traveled way. If the pavement is disturbed on both sides of the centerline (or adjacent lane), then the entire roadway (or affected lanes) shall be resurfaced. All pavement conforms shall be ground to provide a flush surface. Contractor shall grind and overlay within 10 working days of permanent trench paving. Shoulder areas shall be brought up to the finish grade as directed by the County.

14. No paving joints allowed within paved shoulder, contractor shall pave all the way to outer edge of paved shoulder.

15. Disturbed shoulder edge shall be backed with Class II Aggregate Base from edge of pavement a minimum of 4-inches thick by 6-foot wide.

16. School buses shall be passed through the work zone with minimal delays.

17. Above ground boxes and other similar facilities will be allowed within the right-of-way if located as far to the outside edge as possible and if the location either meets AASHTO Clear Zone guidelines or is protected by an existing obstruction such as a tree or utility pole. Utility vaults shall be located a minimum of 4'-0" from edge of pavement.

18. County roads shall be kept clean from mud and debris at all times along the access points and work zone areas during entire project. All standard roadway striping and signage shall be clearly visible, maintained and restored throughout the construction zone during and after the project.

19. In addition to standard dust control measures, streets shall be maintained in a clean condition, free of dirt, mud and debris during construction activities. The contractor shall provide daily, or as needed, street sweeping using a modern mechanical or vacuum-assisted street sweeper.

20. The contractor shall not conduct construction operations in rain or heavy fog conditions.

APPLICATION FOR ENCROACHMENT PERMIT

PLEASE PRINT:

Date 5/30/13

To: San Joaquin County
Department of Public Works

PG & E
(Applicant Name)

6121 Bollinger CANYON RD.
(Mailing Address)

SAN RAMON, CA. 94583
(City, State, Zip Code)

925-244-3770
(Area Code - Telephone Number)

OFFICE USE ONLY

JOB #	130052-10	REF #	
APN		CR #	
EXP. DATE	10/1/31		
VALID	7/1/13 TO 10/1/13		DRIVEWAYS:
STREET	WEST RIPON RD.		*
AREA	RIPON	QUAD SE	*
TYPE	BELL HOLES, TRAFFIC CONTROL DEVICES		
FORMS	SS/OW, R-29, TRENCH CUTTING POLICY		
NOTES			

Sketch (Detailed plans may be submitted)

SEE ATTACHED TRAFFIC CONTROL PLANS

The undersigned hereby applies for permission to excavate, construct and/or otherwise encroach on County Highway Right-of-Way on the NORTH side of W. RIPON ROAD approximately 900 feet/mile EAST of FREDERICK ROAD, _____, by performing the following work (description of work):
SET UP TRAFFIC CONTROL TO EXCAVATE TWO BELL HOLES FOR A PG & E HYDROTEST OF AN EXISTING GAS LINE ON THE NORTH SIDE OF W. RIPON ROAD. (2 LOCATIONS)

Work will commence on or about JULY 1, 2013 for approximately 75 days.

I, the undersigned, certify that I am the owner of the respective property, or am qualified to represent the owner and agree to do the work described above in accordance with the rules and regulations of San Joaquin County and subject to inspection and approval.

[signature] / AGENT — Signature of Applicant - Title

5/30/13 — Date

E:\PUB-SV.WK\MASTER.PS\ENCROACHMENT PERMIT APPLICATION.DOC (01/06)

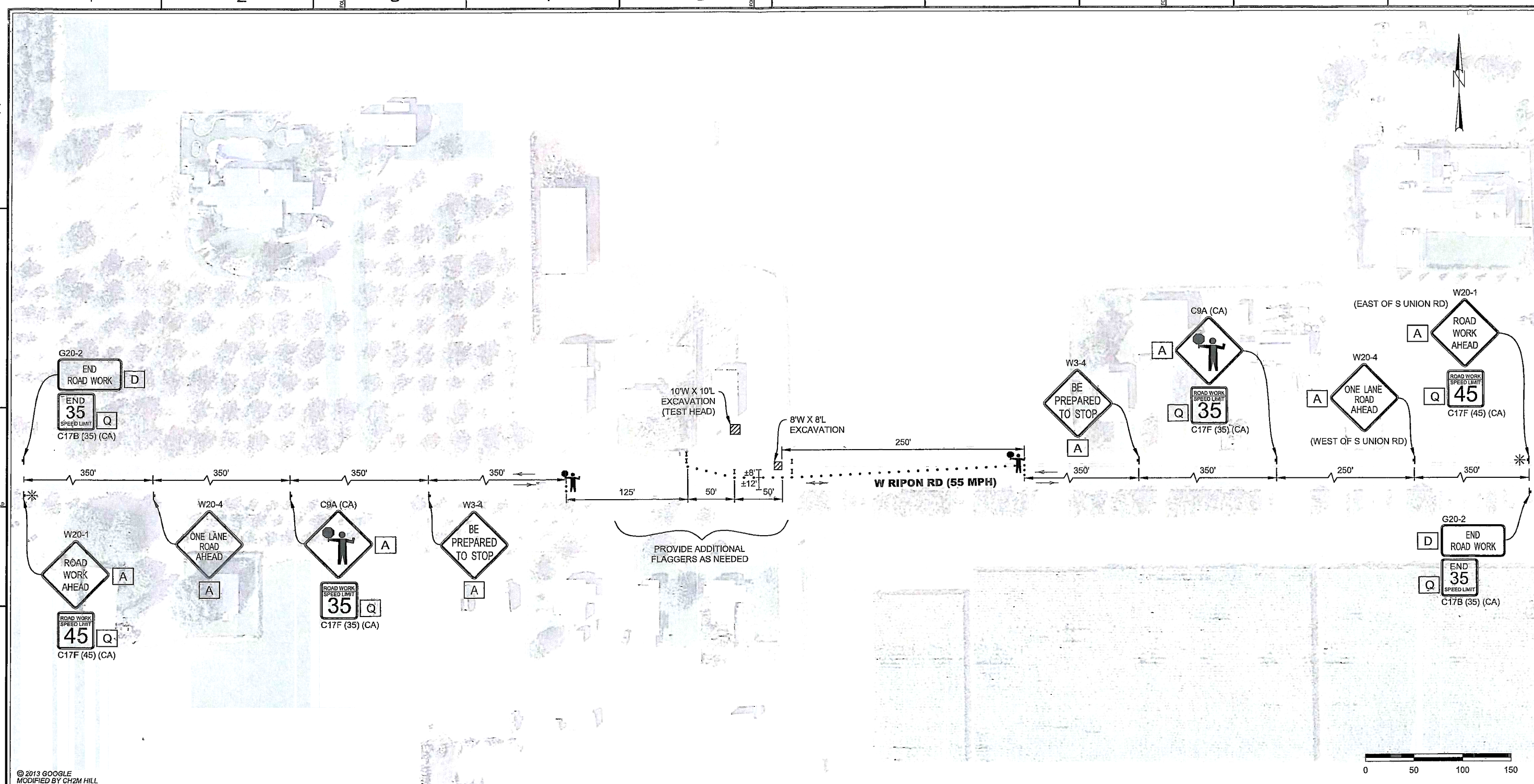

© 2013 GOOGLE
MODIFIED BY CH2M HILL

CONTRACTOR NOTES:

1. ALL TRAFFIC CONTROL DEVICES SHALL CONFORM TO THE LATEST EDITION OF CALIFORNIA MANUAL OF UNIFORM TRAFFIC CONTROL DEVICES (MUTCD) AND CALTRANS STANDARD PLANS AND SPECIFICATIONS.
2. THE LOCAL FIRE DEPARTMENT, SHERIFF/POLICE DEPARTMENT, CALIFORNIA HIGHWAY PATROL, LOCAL SCHOOL DISTRICT, TRANSIT SERVICE PROVIDERS AND UNITED STATES POSTAL SERVICE SHALL BE NOTIFIED 72 HOURS IN ADVANCE OF CONSTRUCTION WORK.
3. THE CONTRACTOR IS SOLELY RESPONSIBLE FOR THE REPAIR OF ANY DAMAGE TO EXISTING IMPROVEMENTS RESULTING FROM THE CONTRACTOR'S OPERATION. THIS REPAIR SHALL INCLUDE ALL CONSTRUCTION AND MATERIALS TO RESTORE THE SITE TO EXISTING CONDITIONS.
4. EACH ADVANCED WARNING SIGN ON EACH SIDE OF THE ROADWAY SHALL BE EQUIPPED WITH AT LEAST TWO FLAGS. FLASHING BEACONS SHALL BE PLACED AT THE LOCATION INDICATED FOR LANE CLOSURE DURING HOURS OF DARKNESS.
5. ALL WORKERS SHALL BE EQUIPPED WITH A REFLECTIVE VEST AND HARD HAT. ALL FLAGGERS SHALL ALSO BE EQUIPPED WITH A C28 "STOP/SLOW" PADDLE AND SHALL BE TRAINED IN THE PROPER FUNDAMENTALS OF FLAGGING TRAFFIC.
6. NO PARKING SIGNS SHALL BE PLACED 72 HOURS PRIOR TO SET UP. SIGNS SHALL BE POSTED EVERY 20 LINEAR FEET OF OCCUPIED SPACE WITH AT LEAST ONE SIGN AT EACH END OF OCCUPIED SPACE.
7. ANY CONFLICTING SIGNS WILL BE COVERED FOR THE LENGTH OF THE JOB.
8. CONTRACTOR SHALL MAINTAIN EMERGENCY VEHICLE AND DRIVEWAY ACCESS AT ALL TIMES.
9. Y&C TRANSPORTATION CONSULTANTS, INC. ASSUMES NO LIABILITY WHEN CONTRACTOR DOES OWN SET UP OR MAKES CHANGES TO THE ORIGINAL TRAFFIC CONTROL PLAN.
10. CITY/COUNTY ENGINEER OR HIS REPRESENTATIVE HAS THE AUTHORITY TO INITIATE FIELD CHANGES TO ASSURE PUBLIC SAFETY.
11. CONTRACTOR SHALL STEEL PLATE EXCAVATED AREA DURING NON-WORKING HOURS TO PROTECT AGAINST PEDESTRIAN ACCESS, EXCLUDING TEST HEAD.

LEGEND

- → = TRAFFIC FLOW DIRECTION
- = TEMPORARY SIGN POST
- • = CHANNELIZER (10' SPACING O.C.)
- ✳ = PORTABLE FLASHING BEACON
- I = TYPE III BARRICADE WITH FLASHING YELLOW BEACON

SIGN PANEL SIZE

A	48" X 48"
D	48" X 24"
Q	24" X 24"

REGISTERED PROFESSIONAL ENGINEER
K DANIEL YAU
No. 14611
Exp. 3/31/14
CIVIL
STATE OF CALIFORNIA
05/29/13

NO.	DATE	DESCRIPTION	GM/SPEC	DWN	CHKD	SUPV	APVD BY
0	05/29/13	ISSUED FOR PERMIT	41617922	DOC	SKL	KDY	

REVISIONS

APPROVED BY	GM 41617922
	SUPV
	DSGN SKL
DOC	DWN DOC
	CHKD SKL
SKL	OK KDY
KDY	DATE 05/29/13
	SCALES AS SHOWN

HYDROTEST T-038-12
DFM 1615-01, LOCATION A
MP 0.02 – 10.12
SAN JOAQUIN COUNTY, CALIFORNIA

PACIFIC GAS AND ELECTRIC COMPANY
WALNUT CREEK, CALIFORNIA

MICROFILM

BILL OF MATL
DWG LIST
SUPSDS
SUPSD BY
SHEET NO. 1 OF 7 SHEETS

41617922 | 0

C:\Users\Station\ -038-12\T-038_Loc_A.dwg, 5/30/2013 8:10:09 AM

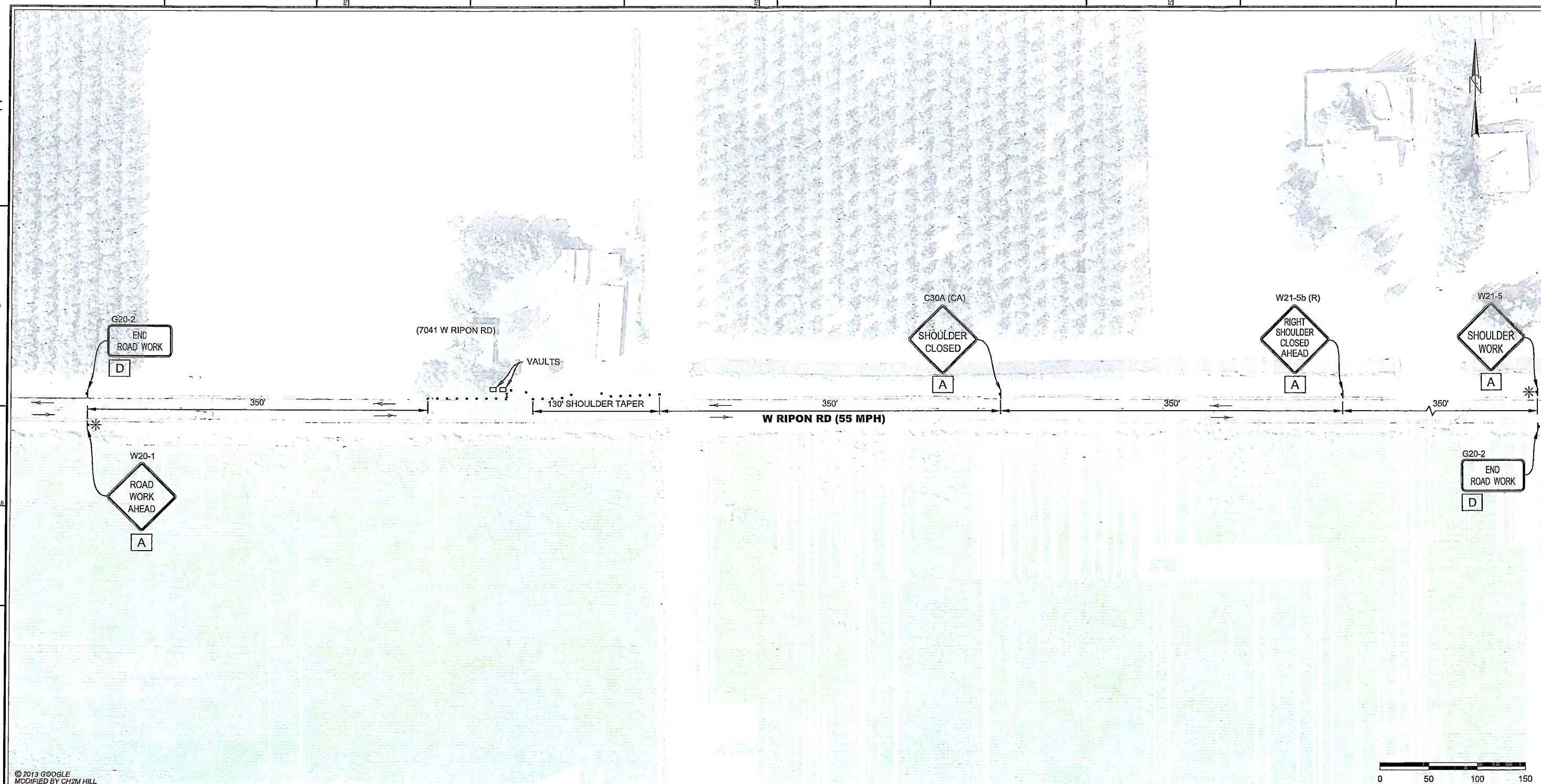

© 2013 GOOGLE
MODIFIED BY CH2M HILL

CONTRACTOR NOTES:

1. ALL TRAFFIC CONTROL DEVICES SHALL CONFORM TO THE LATEST EDITION OF CALIFORNIA MANUAL OF UNIFORM TRAFFIC CONTROL DEVICES (MUTCD) AND CALTRANS STANDARD PLANS AND SPECIFICATIONS.
2. THE LOCAL FIRE DEPARTMENT, SHERIFF/POLICE DEPARTMENT, CALIFORNIA HIGHWAY PATROL, LOCAL SCHOOL DISTRICT, TRANSIT SERVICE PROVIDERS AND UNITED STATES POSTAL SERVICE SHALL BE NOTIFIED 72 HOURS IN ADVANCE OF CONSTRUCTION WORK.
3. THE CONTRACTOR IS SOLELY RESPONSIBLE FOR THE REPAIR OF ANY DAMAGE TO EXISTING IMPROVEMENTS RESULTING FROM THE CONTRACTOR'S OPERATION. THIS REPAIR SHALL INCLUDE ALL CONSTRUCTION AND MATERIALS TO RESTORE THE SITE TO EXISTING CONDITIONS.
4. EACH ADVANCED WARNING SIGN ON EACH SIDE OF THE ROADWAY SHALL BE EQUIPPED WITH AT LEAST TWO FLAGS. FLASHING BEACONS SHALL BE PLACED AT THE LOCATION INDICATED FOR LANE CLOSURE DURING HOURS OF DARKNESS.
5. ALL WORKERS SHALL BE EQUIPPED WITH A REFLECTIVE VEST AND HARD HAT. ALL FLAGGERS SHALL ALSO BE EQUIPPED WITH A C28 "STOP/SLOW" PADDLE AND SHALL BE TRAINED IN THE PROPER FUNDAMENTALS OF FLAGGING TRAFFIC.
6. NO PARKING SIGNS SHALL BE PLACED 72 HOURS PRIOR TO SET UP. SIGNS SHALL BE POSTED EVERY 20 LINEAR FEET OF OCCUPIED SPACE WITH AT LEAST ONE SIGN AT EACH END OF OCCUPIED SPACE.
7. ANY CONFLICTING SIGNS WILL BE COVERED FOR THE LENGTH OF THE JOB.
8. CONTRACTOR SHALL MAINTAIN EMERGENCY VEHICLE AND DRIVEWAY ACCESS AT ALL TIMES.
9. Y&C TRANSPORTATION CONSULTANTS, INC. ASSUMES NO LIABILITY WHEN CONTRACTOR DOES OWN SET UP OR MAKES CHANGES TO THE ORIGINAL TRAFFIC CONTROL PLAN.
10. CITY/COUNTY ENGINEER OR HIS REPRESENTATIVE HAS THE AUTHORITY TO INITIATE FIELD CHANGES TO ASSURE PUBLIC SAFETY.
11. CONTRACTOR SHALL STEEL PLATE EXCAVATED AREA DURING NON-WORKING HOURS TO PROTECT AGAINST PEDESTRIAN ACCESS.

LEGEND

- → = TRAFFIC FLOW DIRECTION
- = TEMPORARY SIGN POST
- • = CHANNELIZER (10' SPACING O.C.)
- ✳ = PORTABLE FLASHING BEACON
- I = TYPE III BARRICADE WITH FLASHING YELLOW BEACON

SIGN PANEL SIZE

A	48" X 48"
D	48" X 24"

PROFESSIONAL ENGINEER REGISTERED K. DANIEL YAU No. 14611 Exp. 3/31/14 CIVIL STATE OF CALIFORNIA 05/31/13

NO.	DATE	DESCRIPTION	GM/SPEC	DWN	CHKD	SUPV	APVD BY
0	05/31/13	ISSUED FOR PERMIT	41617922	DOC	SKL	KDY	

REVISIONS

APPROVED BY	
GM	41617922
SUPV	
DSGN	SKL
DWN	DOC
CHKD	SKL
OK	KDY
DATE	05/31/13
SCALES	AS SHOWN

HYDROTEST T-038-12
DFM 1615-01, LOCATION C
MP 0.02 – 10.12
SAN JOAQUIN COUNTY, CALIFORNIA

PACIFIC GAS AND ELECTRIC COMPANY
WALNUT CREEK, CALIFORNIA

MICROFILM
BILL OF MATL
DWG LIST
SUPSDS
SUPSD BY
SHEET NO. 3A OF 7 SHEETS

41617922 0

C:\Users\Station\ ·038-12IT-038_Loc_C.dwg, 5/31/2013 1:46:56 PM

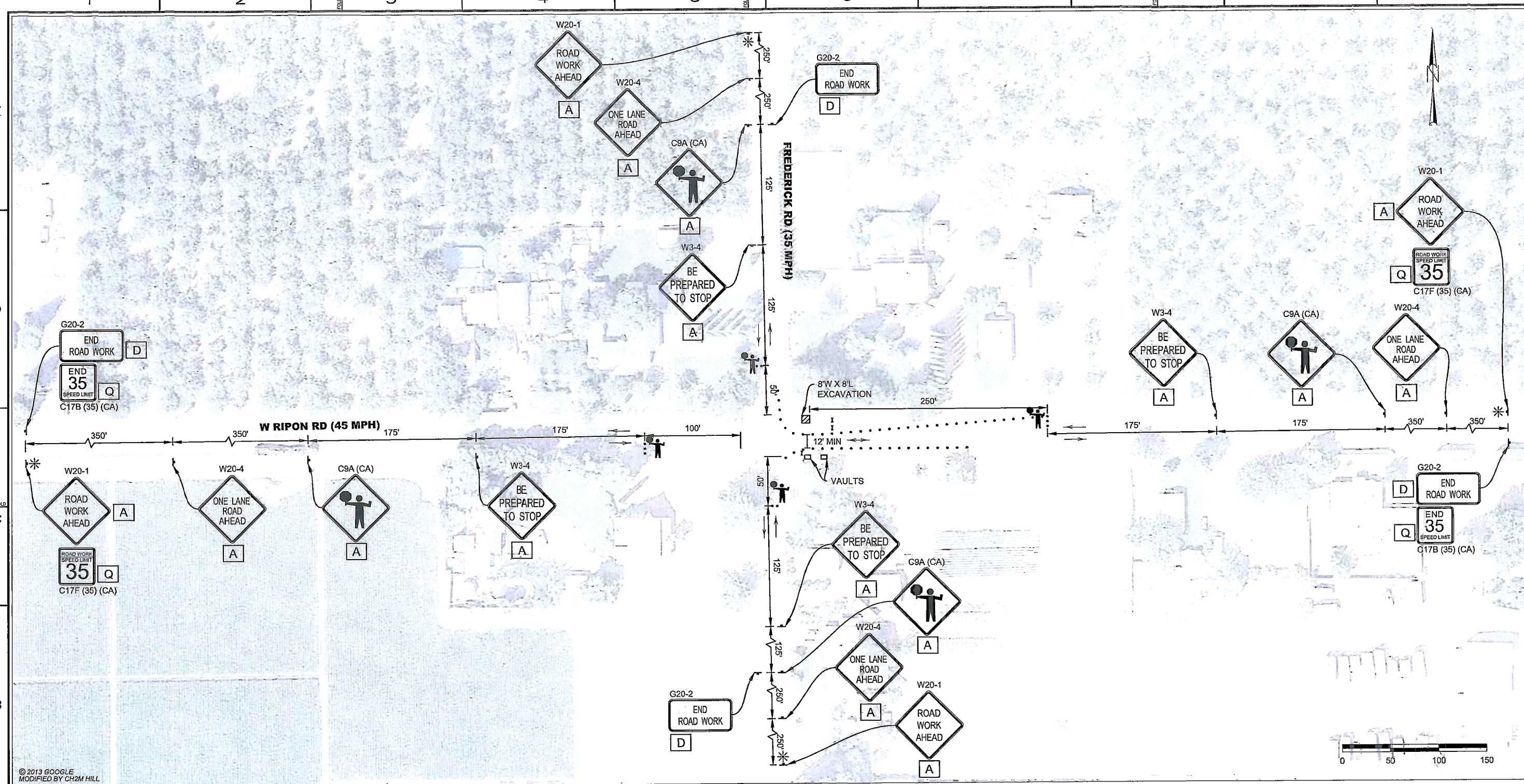

© 2013 GOOGLE
MODIFIED BY CH2M HILL

CONTRACTOR NOTES:

1. ALL TRAFFIC CONTROL DEVICES SHALL CONFORM TO THE LATEST EDITION OF CALIFORNIA MANUAL OF UNIFORM TRAFFIC CONTROL DEVICES (MUTCD) AND CALTRANS STANDARD PLANS AND SPECIFICATIONS.
2. THE LOCAL FIRE DEPARTMENT, SHERIFF/POLICE DEPARTMENT, CALIFORNIA HIGHWAY PATROL, LOCAL SCHOOL DISTRICT, TRANSIT SERVICE PROVIDERS AND UNITED STATES POSTAL SERVICE SHALL BE NOTIFIED 72 HOURS IN ADVANCE OF CONSTRUCTION WORK.
3. THE CONTRACTOR IS SOLELY RESPONSIBLE FOR THE REPAIR OF ANY DAMAGE TO EXISTING IMPROVEMENTS RESULTING FROM THE CONTRACTOR'S OPERATION. THIS REPAIR SHALL INCLUDE ALL CONSTRUCTION AND MATERIALS TO RESTORE THE SITE TO EXISTING CONDITIONS.
4. EACH ADVANCED WARNING SIGN ON EACH SIDE OF THE ROADWAY SHALL BE EQUIPPED WITH AT LEAST TWO FLAGS. FLASHING BEACONS SHALL BE PLACED AT THE LOCATION INDICATED FOR LANE CLOSURE DURING HOURS OF DARKNESS.
5. ALL WORKERS SHALL BE EQUIPPED WITH A REFLECTIVE VEST AND HARD HAT. ALL FLAGGERS SHALL ALSO BE EQUIPPED WITH A C28 "STOP/SLOW" PADDLE AND SHALL BE TRAINED IN THE PROPER FUNDAMENTALS OF FLAGGING TRAFFIC.
6. NO PARKING SIGNS SHALL BE PLACED 72 HOURS PRIOR TO SET UP. SIGNS SHALL BE POSTED EVERY 20 LINEAR FEET OF OCCUPIED SPACE WITH AT LEAST ONE SIGN AT EACH END OF OCCUPIED SPACE.
7. ANY CONFLICTING SIGNS WILL BE COVERED FOR THE LENGTH OF THE JOB.
8. CONTRACTOR SHALL MAINTAIN EMERGENCY VEHICLE AND DRIVEWAY ACCESS AT ALL TIMES.
9. Y&C TRANSPORTATION CONSULTANTS, INC. ASSUMES NO LIABILITY WHEN CONTRACTOR DOES OWN SET UP OR MAKES CHANGES TO THE ORIGINAL TRAFFIC CONTROL PLAN.
10. CITY/COUNTY ENGINEER OR HIS REPRESENTATIVE HAS THE AUTHORITY TO INITIATE FIELD CHANGES TO ASSURE PUBLIC SAFETY.
11. CONTRACTOR SHALL STEEL PLATE EXCAVATED AREA DURING NON-WORKING HOURS TO PROTECT AGAINST PEDESTRIAN ACCESS.

LEGEND

- → = TRAFFIC FLOW DIRECTION
- = TEMPORARY SIGN POST
- • = CHANNELIZER (10' SPACING O.C.)
- ✳ = PORTABLE FLASHING BEACON
- I = TYPE III BARRICADE WITH FLASHING YELLOW BEACON

SIGN PANEL SIZE	
A	48" X 48"
D	48" X 24"
Q	24" X 24"

REGISTERED PROFESSIONAL ENGINEER
K. DANIEL YAU
No. 14611
Exp. 3/31/14
CIVIL
STATE OF CALIFORNIA
06/05/13

NO.	DATE	DESCRIPTION	GM/SPEC	DWN	CHKD	SUPV	APVD BY
0	06/05/13	ISSUED FOR PERMIT	41617922	DOC	SKL	KDY	

REVISIONS

APPROVED BY		
GM 41617922		
SUPV		
DSGN	SKL	
DWN	DOC	
CHKD	SKL	
OK	KDY	
DATE 06/05/13		
SCALES AS SHOWN		

HYDROTEST T-038-12
DFM 1615-01, LOCATION D
MP 0.02 – 10.12
SAN JOAQUIN COUNTY, CALIFORNIA

PACIFIC GAS AND ELECTRIC COMPANY
WALNUT CREEK, CALIFORNIA

MICROFILM
BILL OF MATL
DWG LIST
SUPSDS
SUPSD BY
SHEET NO. 3B OF 7 SHEETS

41617922 0

C:\Users\Station\Desktop\T-038-12\T-038_Loc_D.dwg, 6/6/2013 4:10:04 PM

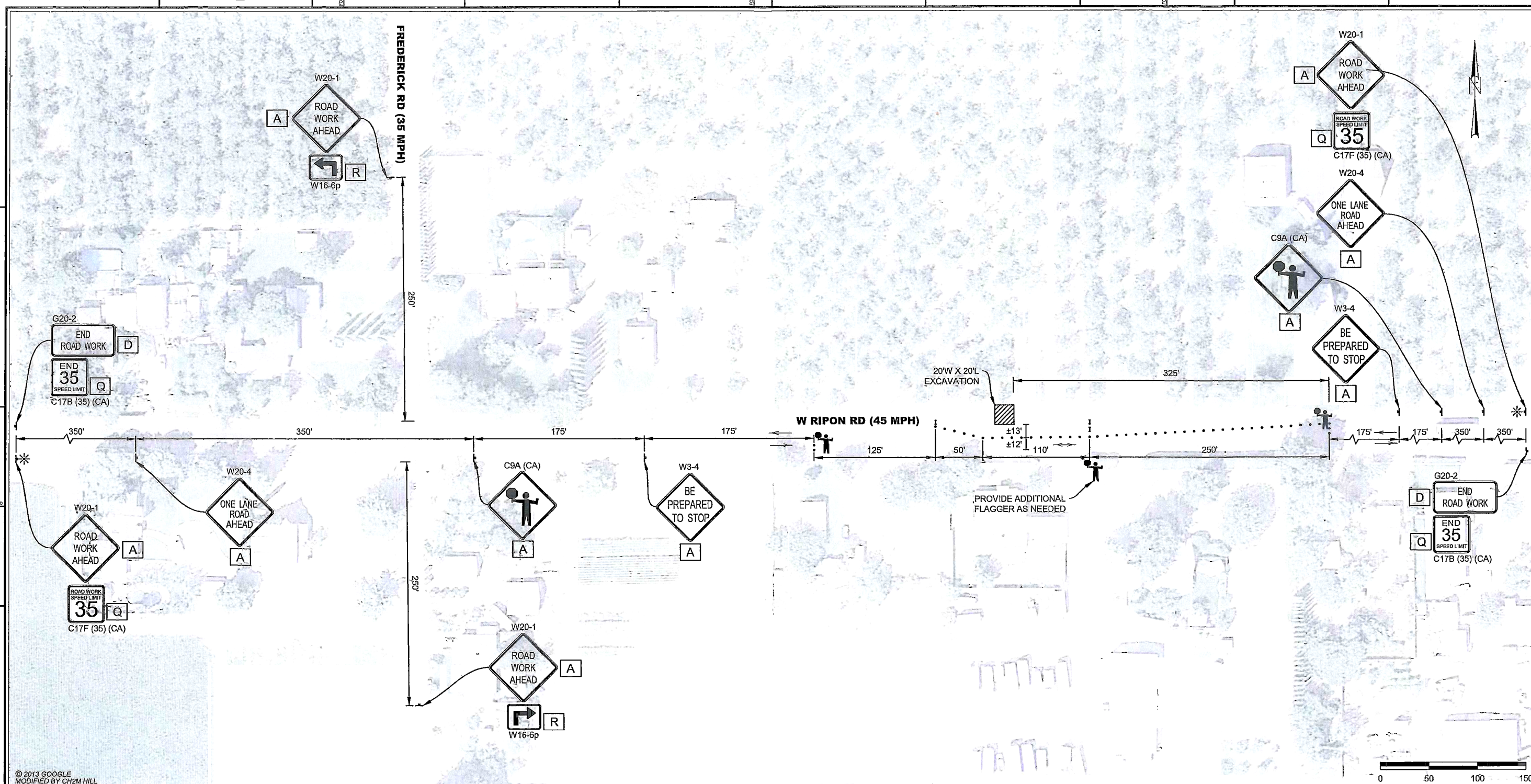

© 2013 GOOGLE
MODIFIED BY CH2M HILL

CONTRACTOR NOTES:

1. ALL TRAFFIC CONTROL DEVICES SHALL CONFORM TO THE LATEST EDITION OF CALIFORNIA MANUAL OF UNIFORM TRAFFIC CONTROL DEVICES (MUTCD) AND CALTRANS STANDARD PLANS AND SPECIFICATIONS.
2. THE LOCAL FIRE DEPARTMENT, SHERIFF/POLICE DEPARTMENT, CALIFORNIA HIGHWAY PATROL, LOCAL SCHOOL DISTRICT, TRANSIT SERVICE PROVIDERS AND UNITED STATES POSTAL SERVICE SHALL BE NOTIFIED 72 HOURS IN ADVANCE OF CONSTRUCTION WORK.
3. THE CONTRACTOR IS SOLELY RESPONSIBLE FOR THE REPAIR OF ANY DAMAGE TO EXISTING IMPROVEMENTS RESULTING FROM THE CONTRACTOR'S OPERATION. THIS REPAIR SHALL INCLUDE ALL CONSTRUCTION AND MATERIALS TO RESTORE THE SITE TO EXISTING CONDITIONS.
4. EACH ADVANCED WARNING SIGN ON EACH SIDE OF THE ROADWAY SHALL BE EQUIPPED WITH AT LEAST TWO FLAGS. FLASHING BEACONS SHALL BE PLACED AT THE LOCATION INDICATED FOR LANE CLOSURE DURING HOURS OF DARKNESS.
5. ALL WORKERS SHALL BE EQUIPPED WITH A REFLECTIVE VEST AND HARD HAT. ALL FLAGGERS SHALL ALSO BE EQUIPPED WITH A C28 "STOP/SLOW" PADDLE AND SHALL BE TRAINED IN THE PROPER FUNDAMENTALS OF FLAGGING TRAFFIC.
6. NO PARKING SIGNS SHALL BE PLACED 72 HOURS PRIOR TO SET UP. SIGNS SHALL BE POSTED EVERY 20 LINEAR FEET OF OCCUPIED SPACE WITH AT LEAST ONE SIGN AT EACH END OF OCCUPIED SPACE.
7. ANY CONFLICTING SIGNS WILL BE COVERED FOR THE LENGTH OF THE JOB.
8. CONTRACTOR SHALL MAINTAIN EMERGENCY VEHICLE AND DRIVEWAY ACCESS AT ALL TIMES.
9. Y&C TRANSPORTATION CONSULTANTS, INC. ASSUMES NO LIABILITY WHEN CONTRACTOR DOES OWN SET UP OR MAKES CHANGES TO THE ORIGINAL TRAFFIC CONTROL PLAN.
10. CITY/COUNTY ENGINEER OR HIS REPRESENTATIVE HAS THE AUTHORITY TO INITIATE FIELD CHANGES TO ASSURE PUBLIC SAFETY.
11. CONTRACTOR SHALL STEEL PLATE EXCAVATED AREA DURING NON-WORKING HOURS TO PROTECT AGAINST PEDESTRIAN ACCESS.

LEGEND

- → = TRAFFIC FLOW DIRECTION
- = TEMPORARY SIGN POST
- • = CHANNELIZER (10' SPACING O.C.)
- ✳ = PORTABLE FLASHING BEACON
- I = TYPE III BARRICADE WITH FLASHING YELLOW BEACON

SIGN PANEL SIZE	
A	48" X 48"
D	48" X 24"
Q	24" X 24"
R	24" X 18"

REGISTERED PROFESSIONAL ENGINEER
K. DANIEL YAU
No. 44611
Exp. 3/31/14
CIVIL
STATE OF CALIFORNIA
06/05/13

NO.	DATE	DESCRIPTION	GM/SPEC	DWN	CHKD	SUPV	APVD BY
2	06/05/13	REVISED FOR PERMIT	41617922	DOC	SKL	KDY	
1	05/31/13	REVISED FOR PERMIT	41617922	DOC	SKL	KDY	
0	05/29/13	ISSUED FOR PERMIT	41617922	DOC	SKL	KDY	

REVISIONS

APPROVED BY	GM 41617922
	SUPV
	DSGN SKL
DOC	DWN DOC
	CHKD SKL
SKL	OK KDY
KDY	DATE 06/05/13
	SCALES AS SHOWN

HYDROTEST T-038-12
DFM 1615-01, LOCATION E
MP 0.02 – 10.12
SAN JOAQUIN COUNTY, CALIFORNIA

PACIFIC GAS AND ELECTRIC COMPANY
WALNUT CREEK, CALIFORNIA

MICROFILM
BILL OF MATL
DWG LIST
SUPSDS
SUPSD BY
SHEET NO. 4 OF 7 SHEETS
41617922 0

C:\Users\Station\Desktop\T-038-12\T-038_Loc_E.dwg, 6/5/2013 3:17:47 PM

CP AREA # F-00001
WALL MAP 3116, 3117, 3118, 3175, 3176
PLAT 3116: I7, I8
3117: I1–I8
3118: I1, I2, I3, J3, J4
3175: A4–A6, B6–B8
3176: B1–B3
SAN JOAQUIN COUNTY

HYDROTEST T-038-12
DFM1615-01, MP 0.02 – 10.12

EXPENSE ORDER # 41617922
CAPITAL ORDER # 30963041

SCHEDULE OF SHEETS

SHEET 1 – GENERAL / CONSTRUCTION NOTES
SHEET 2 – HYDROTEST PLAN VIEW / TEST LOCATIONS
SHEET 3 – TAP LOCATIONS / CONSTRUCTION DETAILS
SHEET 4 – TAP LOCATIONS / CONSTRUCTION DETAILS
SHEET 5 – TAP LOCATIONS / CONSTRUCTION DETAILS
SHEET 6 – TAP LOCATIONS
SHEET 7 – TAP LOCATIONS
SHEET 8 – CONSTRUCTION DETAILS
SHEET 9 – HYDROTEST PROFILE VIEW / PIPELINE FEATURES
SHEET 10 – CONSTRUCTION DETAILS
SHEET 11 – CONSTRUCTION DETAILS
SHEET 12 – MATERIAL OF RECORD / BILL OF MATERIALS

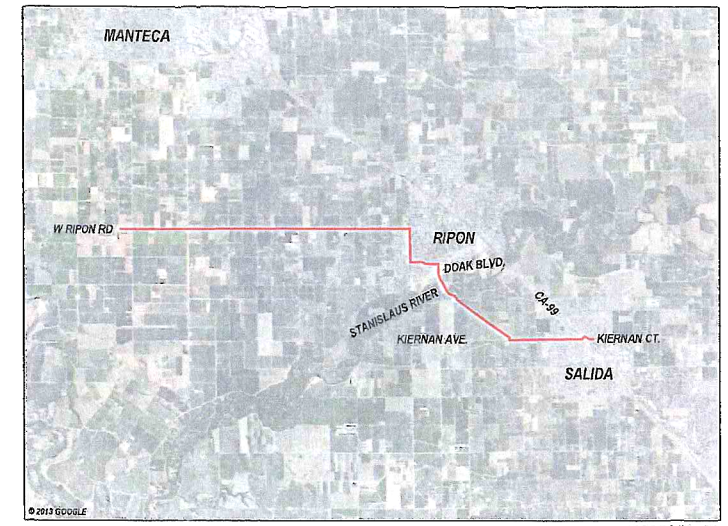

VICINITY MAP
NOT TO SCALE

MODESTO, CA

SUMMARY OF PROPOSED WORK:

HYDROSTATICALLY TEST 12" DFM 1615-01 FROM MP 0.02 TO MP 10.12 PER DRAWINGS AND STRENGTH TEST PRESSURE REPORTS (#41617922) AND MATERIAL OF RECORD DRAWING #41617922 SHEET 12 OF 12.

EXPENSE ORDER # 41617922

1. INSTALL 10' OF 12.750"OD x 0.281"WT, API 5L, X-52, HFW, FBE COATED PIPE.
2. INSTALL 8' OF 8.625"OD x 0.322"WT, API 5L, GR B, SMLS PIPE.
3. INSTALL 10' OF 2.375"OD x 0.154"WT, API 5LX, GR B, SMLS PIPE.
4. REMOVE 10' OF 12.750"OD x 0.250"WT, API 5L, X-42, ERW PIPE INSTALLED ON GM 131784 (1955)
5. REMOVE 10' OF 12.750"OD x 0.250"WT, API 5L, GR B, ERW PIPE INSTALLED ON GM 127407 (1954).
6. REMOVE 6' OF 8.625"OD x 0.322"WT, API 5L, GR B, SMLS PIPE INSTALLED ON GM 171690 (1969).
7. REMOVE 2' OF 8.625"OD x 0.322"WT, API 5L, GR B, SMLS PIPE INSTALLED ON GM 41617923 (2012).
8. REMOVE 7' OF 2.375"OD x 0.154"WT, API 5L, GR B, SMLS PIPE INSTALLED ON GM 171690 (1969).
9. REMOVE 3' OF 2.375"OD x 0.154"WT, API 5L, GR B, SMLS PIPE INSTALLED ON GM 30036631 (1999)

CAPITAL ORDER # 30963041

1. INSTALL 80'-5" OF 12.750"OD x 0.375"WT, API 5L, GR B, SMLS PIPE.
2. INSTALL 39'-7" OF 12.750"OD x 0.281"WT, API 5L, X-52, HFW FBE COATED PIPE
3. INSTALL 17'-3" OF 8.625"OD x 0.322"WT, API 5L, GR B, SMLS PIPE.
4. INSTALL 57'-10" OF 4.500"OD x 0.237"WT, API 5L, GR B, SMLS PIPE.
5. INSTALL 15'-6" OF 2.375"OD x 0.154"WT, API 5L, GR B, SMLS PIPE.
6. INSTALL FOUR 12" ANSI 300 BALL VALVES.
7. INSTALL TWO 8" ANSI 300 BALL VALVES.
8. INSTALL EIGHT 4" ANSI 300 BALL VALVES.
9. INSTALL THREE 2" ANSI 300 BALL VALVES.
10. INSTALL ONE 12" ANSI 300 LINE STOPPER FITTING
11. REMOVE 14' OF 12.750"OD x 0.375"WT, API 5L, GR B, SMLS PIPE INSTALLED ON GM 171690 (1969).
12. REMOVE 40'-2" OF 12.750"OD x 0.250"WT, API 5LX, X-42, ERW PIPE INSTALLED ON GM 131784 (1955).
13. REMOVE 184'-5" OF 12.750"OD x 0.250"WT, API 5L, GR B, ERW PIPE INSTALLED ON GM 127407 (1954).
14. REMOVE 31'-2" OF 12.750"OD x 0.219"WT, API 5LX, X-42, ERW PIPE INSTALLED ON GM 171690 (1969)
15. REMOVE 17'-3" OF 8.625"OD x 0.322"WT, API 5L, GR B, SMLS PIPE INSTALLED ON GM 171690 (1969).
16. REMOVE 9' OF 8.625"OD x 0.322"WT, API 5L, GR B, SMLS PIPE INSTALLED ON GM 127407 (1954).
17. REMOVE 9'-6" OF 2.375"OD x 0.154"WT, API 5L, GR B, SMLS PIPE INSTALLED ON GM 171690 (1969)
18. REMOVE 6' OF 2.375"OD x 0.154"WT, API 5L, GR B, SMLS PIPE INSTALLED ON GM 30036631 (1999).
19. REMOVE TWO 12" ASA 300 PLUG VALVES INSTALLED ON GM 131784 (1955).
20. REMOVE ONE 12" ASA 300 PLUG VALVE INSTALLED ON GM 127407 (1954).
21. REMOVE ONE 12" USAS 300 PLUG VALVE INSTALLED ON GM 171690 (1969).
22. REMOVE TWO 8" ASA 300 PLUG VALVES INSTALLED ON GM 127407 (1954).
23. REMOVE TWO 8" USAS 300 PLUG VALVES INSTALLED ON GM 171690 (1969).
24. REMOVE FOUR 4" ASA 300 PLUG VALVES INSTALLED ON GM 131784 (1955).
25. REMOVE TWO 4" ASA 300 PLUG VALVES INSTALLED ON GM 127407 (1954).
26. REMOVE ONE 2" ANSI 300 GATE VALVE INSTALLED ON GM 30036631 (1999).

SEQUENCE OF OPERATIONS:

1. PRIOR TO TAKING PIPELINE CLEARANCE THE FOLLOWING MUST BE PERFORMED:
   A. PG&E T&R TO CHECK ANY DRIPS IN SHUT-IN SEGMENT FOR PRESENCE OF PIPELINE LIQUIDS.
   B. CONTRACTOR TO REMOVE PIPE WRAP FROM CUT OUT SECTIONS EXTENDING 1' BEYOND EACH END OF THE CUT-OUT AND SANDBLAST TO NEAR WHITE WHERE DESIGNATED ON DRAWINGS FOR H-FORM INSPECTION.
   C. H-FORM INSPECTION TO BE PERFORMED ON PIPELINE BY PG&E APPROVED VENDOR. PERFORM H-FORM INSPECTION PRIOR TO REMOVAL OF CUT-OUT SECTION.
   D PERFORM H-FORM INSPECTION AS DESIGNATED ON DRAWINGS. IF UT W.T. MEASUREMENTS IN SECTION 2.5 DO NOT MATCH EXISTING PIPE SPECIFICATIONS AS SHOWN ON DRAWINGS, IMMEDIATELY NOTIFY ENGINEER.
   E. COMPLETE A-FORMS ON ALL EXPOSED PIPE AND INCLUDE IN AS-BUILT PACKAGE.
   F. G.C. GAS TO INSTALL SAVE-A-VALVES FOR OIL TESTING AND SNIFF HOLES WHERE DESIGNATED IN THE TIE-IN PROCEDURE. G.C GAS FOREMAN TO CONFIRM LOCATION AND NUMBER OF SAVE-A-VALVE LOCATIONS AND ENSURE WELD PRESSURE CALCULATIONS ARE PROVIDED BY ENGINEERING PRIOR TO WELDING SAVE-A-VALVES ON PIPELINE.
2. AFTER CLEARANCE CONTRACTOR TO TRANSPORT 3' OF EACH H-FORM TESTED PIPE SEGMENT TO 2000 CROWS LANDING RD., MODESTO. UTILIZE CHAIN OF CUSTODY PROCESS FOR ALL SHIPMENTS.
3. UPON ARRIVAL AT MODESTO, ATS TO PERFORM FURTHER TESTING AND ANALYSIS OF CUT-OUT SECTIONS.
4. SEE T-038-13 HYDROSTATIC TEST PROCEDURE FOR SEQUENCING OF HYDROSTATIC TEST TASKS.

CONSTRUCTION NOTES:

1. WELDING REQUIREMENTS:
   –ALL ARC WELDING IS TO BE PERFORMED IN ACCORDANCE WITH GAS STANDARD D-22.
   –ALL CANS AND SPOOLS SHALL BE A MINIMUM LENGTH OF ONE DIAMETER, WHEREVER POSSIBLE.
   –WHEN 16" AND LARGER VALVES AND FITTINGS ARE WELDED TO EACH OTHER OR TO PIPE, THE JOINT SHALL HAVE A TWO PASS WELD ON THE INSIDE, AS WELL AS THE OUTSIDE WELD, IF THE INTERNAL MISALIGNMENT EXCEEDS 3/32". THIS REQUIREMENT ALSO APPLIES TO SMALLER DIAMETER VALVES AND FITTING WHEN IT IS PRACTICAL.
2. HYDROSTATIC TEST REQUIREMENTS:
   –HYDROSTATIC TESTING SHALL MEET PRESSURE AND DURATION REQUIREMENTS OF GAS STANDARD A-34 AND SHALL BE CONDUCTED IN ACCORDANCE WITH GAS STANDARD A-37.
   –SEE ATTACHED STPR AND SITE SPECIFIC TEST PROCEDURE.
3. ALL WELDS THAT HAVE NOT BEEN HYDROTESTED AND ALL NON-WELDED FITTINGS SHALL BE SOAP TESTED AT 100 PSIG AND OPERATING PRESSURE.
4. PAINTING AND COATING REQUIREMENTS:
   ALL EXPOSED PIPE AND FITTINGS ARE TO BE PAINTED IN ACCORDANCE WITH GAS STANDARD E-30. ALL COATING ON BURIED PIPE AND FITTINGS ARE TO BE APPLIED IN ACCORDANCE WITH GAS STANDARD E-35. FOR COATING SELECTIONS ON BURIED PIPE SEE DIRECT BURIAL SELECTIONS TABLE.
5. CALL USA AT LEAST TWO WORKING DAYS PRIOR TO EXCAVATION (811).
6. LOCATION OF EXISTING SUBSTRUCTURES ARE APPROXIMATE. BEFORE POWER OR HEAVY EQUIPMENT IS USED FOR EXCAVATION, THE EXACT DEPTH AND LOCATION OF SUBSTRUCTURES SHALL FIRST BE DETERMINED BY HAND EXCAVATION, IF NECESSARY.
7. ALL BELLHOLES SHALL BE EXCAVATED TO THE FOLLOWING MINIMUM DIMENSIONS: BELLHOLE SHALL EXTEND MINIMUM 4' LONGITUDINALLY BEYOND WELD/CUT LINES ON EITHER SIDE; BELLHOLE SHALL EXTEND MINIMUM 2.5' BEYOND SIDE WALL OF PIPE AND SHALL PROVIDE FOR MINIMUM 2' CLEARANCE BELOW BOTTOM OF PIPE WALL FOR ENTIRE EXPOSED LENGTH. ANY DEVIATION TO THESE DIMENSIONS MUST BE APPROVED BY PG&E CONSTRUCTION MANAGER.
8. ALL BENDS ARE SMOOTH FIELD BENDS EXCEPT WHERE ELBOWS ARE NOTED. FIELD BEND SHALL BE MADE IN ACCORDANCE WITH GAS STANDARD A-36 SECTION 4-D.
9. ALL ANGLES SHOWN IN THE PLAN AND PROFILE ARE APPROXIMATE AND SHALL BE CUT TO SUIT FIELD CONDITION.
10. THIS PIPELINE MUST BE INSTALLED WITH AT LEAST 12 INCHES OF CLEARANCE FROM ANY OTHER UNDERGROUND STRUCTURE NOT ASSOCIATED WITH THE PIPELINE.
11. COATING REMOVAL:
    BEFORE REMOVING THE PIPE COATING ON PRE-1972 PIPE (DOES NOT INCLUDE PLASTIC TAPE OR FUSION BONDED EPOXY COATINGS) THE FOLLOWING STEPS SHALL BE TAKEN:
    –FOR ALL NON-EMERGENCY WORK, PRE-1972 PIPE WRAP MUST BE EVALUATED TO DETERMINE IF IT CONTAINS ASBESTOS PRIOR TO REMOVAL.
    –FOR EMERGENCY WORK ON PRE-1972 PIPE, ASSUME THE WRAP CONTAINS > 1% ASBESTOS UNTIL THE WRAP CAN BE TESTED.
    –OBTAIN SAMPLES OF THE WRAP, AND HAVE SAMPLES TESTED FOR ASBESTOS IN ACCORDANCE WITH RP 4711.
    –TEST RESULTS ARE TO BE INCLUDED WITH AS-BUILTS.
    –FOLLOW PROCEDURE IN RP 4711 FOR REMOVAL OF PIPE WRAP.
12. BONDING CABLES TO BE INSTALLED ACROSS PIPELINE CUT-OUTS AT ALL LOCATIONS THE PIPELINE IS SEVERED PRIOR TO REMOVAL. CHAIN CLAMPS, MAGNETIC CLAMPS, OR OTHER CONSTRUCTION MANAGEMENT APPROVED CLAMPS AND #6 (MIN.) STRANDED COPPER CABLE SHALL BE UTILIZED. CLAMPS TO REMAIN IN PLACE UNTIL PIPELINE IS TIED IN.
13. ALL BALL VALVES USED FOR TAPS IN HYDROTEST SECTION ARE TO BE CLOSED 50% FROM FULL OPEN POSITION PRIOR TO FILL AND FOR DURATION OF HYDROTEST ALL PLUG VALVES USED FOR TAPS/BLOWOFFS IN HYDROTEST SECTION ARE TO BE IN FULL OPEN POSITION PRIOR TO FILL AND FOR DURATION OF HYDROTEST UNLESS SPECIFICALLY CALLED OUT TO BE IN CLOSED POSITION ON DRAWING.
14. ALL EXCAVATIONS WITHIN EXISTING STATIONS SHALL BE HAND DUG OR EXCAVATED USING SOFT DIG METHODS (e.g. VACUUM EXCAVATIONS OR SIMILAR).
15. COPIES OF REFERENCE DRAWINGS ARE AVAILABLE TO FIELD PERSONNEL (PG&E, INSPECTION OR CONTRACTOR) ON AN AS NEEDED BASIS. CONTACT THE ASSIGNED ENGINEER IDENTIFIED IN CONTACTS TO OBTAIN COPIES OF ANY REFERENCE DRAWINGS.
16. RETIRED PIPE SHALL BE PURGED ACCORDING TO A-38. FIELD TO VERIFY IF LIQUIDS ARE PRESENT IN PIPE. IF LIQUIDS ARE PRESENT, RETIRED PIPE SHALL BE PIGGED.

GENERAL NOTES:

1. THIS DRAWING HAS BEEN CREATED BY REVIEW OF THE AS-BUILT DRAWINGS & RECORDS. ACCURACY IS DEPENDENT UPON THE SOURCE DOCUMENTS LISTED ON THE REFERENCE DRAWINGS.
2. "R" STATIONING ON THIS DRAWING DENOTES "REFERENCE" STATIONING AND IS A RESULT OF PG&E GIS SHAPEFILE OVERLAID UPON GOOGLE EARTH IMAGERY AND MIGHT NOT ACCURATELY DEPICT EXACT DISTANCES. FIELD VERIFY ALL DISTANCES.
3. DISTANCES TO ALL UTILITIES SHOWN ON DRAWING ARE APPROXIMATE BASED UPON REVIEW OF PG&E & OTHER UTILITY/AGENCY DRAWINGS & AS-BUILTS. CONTRACTOR TO CALL USA TO HAVE LOCATION OF THESE FACILITIES MARKED AND POTHOLE TO EXPOSE/VERIFY LOCATION.

CONTACT INFORMATION:

CONSTRUCTION MANAGER ---------- _____ _____ (___) ___-____
T&R SUPERVISOR ---------- JOHN MARTIN (209) 404-0221
CLEARANCE SUPERVISOR ---------- PAUL RICHORD (559) 351-3300
PROJECT COORDINATOR ---------- CURTIS GUERRA (510) 325-1940
LEAD ENGINEER ---------- IAN HOM (925) 408-9888
ENGINEER ---------- CHERYL FELDMAN (707) 409-8758
H-FORM ---------- ANDRE FILIATRAULT, GE (832) 457-1252
MATERIALS (PIPE) ---------- MICHAEL LACHINA (510) 468-1924
MATERIALS (FITTINGS) ---------- MICHAEL DE HART (209) 728-4603
MATERIALS CHAIN OF CUSTODY --------- MICHAEL PAINTER (209) 275-7241
CORROSION ENGINEER ---------- JONATHAN RIGOTTI (530) 902-0147

DESIGN & CONSTRUCTION REVIEW FOR INTERNAL CORROSION

DESCRIPTION	ACTION SELECTED	INITIAL	DATE
CORROSION ENGINEER HAS REVIEWED THIS LOCATION AND THERE IS NO KNOWN THREAT OF INTERNAL CORROSION. NO INTERNAL CORROSION DESIGN OR CONSTRUCTION CONSIDERATIONS ARE NECESSARY.			
INTERNAL CORROSION MAY BE A THREAT AND THE CONSTRUCTION DESIGNS HAVE BEEN REVIEWED WITH CORROSION ENGINEERING. DOCUMENTATION OF THE REVIEW AND ACTIONS TAKEN ARE IN THE JOB PACKAGE AND INCORPORATED IN THIS DESIGN.			

CONTRACTOR

WELDING INSPECTED PER PG&E GAS STANDARD D-40
VISUAL _____ ☐
MAGNETIC PARTICLE _____ ☐
INSPECTOR _____
DATE _____

G.C. GAS

WELDING INSPECTED PER PG&E GAS STANDARD D-40
VISUAL _____ ☐
MAGNETIC PARTICLE _____ ☐
INSPECTOR _____
DATE _____

NOTIFIED U.S.A.

DATE _____
TICKET NUMBER _____
BY _____

Installation Tested or Inspected and Noted on Drawing. All Levels Satisfactory per PG&E GS&S 0-16

Qualified Employee _____ Date _____

Corrosion mechanic's signature is required when a CPA boundary is within the scope of the project

DIRECT BURIAL COATING SELECTIONS
LISTED IN ORDER OF PREFERENCE

MAIN LINE COATING	FBE
MINOR REPAIRS	PROTAL 7200, POWERCRETE J, DEVGRIP 238
TIE-IN WELDS	PROTAL 7200, POWERCRETE J, DEVGRIP 238
GIRTH WELDS	PROTAL 7200, POWERCRETE J, DEVGRIP 238
BUTT WELDED FITTINGS	PROTAL 7200, POWERCRETE J, DEVGRIP 238
VALVE ASSEMBLIES	DEVGRIP 238
SHORT SEGMENTS OF PIPE	PROTAL 7200, POWERCRETE J, DEVGRIP 238
AIR-TO-SOIL TRANSITIONS	DEVGRIP 238, POWERCRETE J
PRESSURE CONTROL FITTINGS	BODY PROTAL 7200 FLANGE WAX TAPE
TIE-INS/COATING TRANSITIONS	PROTAL 7200, WAXTAPE, POLYKEN TAPE

BORED COATING SELECTIONS
LISTED IN ORDER OF PREFERENCE

MAIN LINE COATING	ARC APPLIED OVER FBE
MINOR REPAIRS	PROTAL 7200, POWERCRETE J
GIRTH WELDS	PROTAL 7200, POWERCRETE J

NOTES:
1) CONTACT THE RESPONSIBLE PIPELINE ENGINEER TO REQUEST A VARIANCE FROM THE ABOVE COATING SELECTIONS
2) ALL COATINGS ARE TO BE APPLIED IN ACCORDANCE WITH GS&S E-30 AND E-35

REFERENCE DRAWINGS:

385162	–	OPERATING MAP – LINE 108 TO RIVERBANK-OAKDALE (SHT 1 OF 4)
383669	–	MAIN LINE VALVE INSTALLATION RIPON SALIDA 12" MAIN
456004	–	12" REPLACEMENT AT STANISLAUS RIVER
171690	–	RECONSTRUCTION OF GAS DISTRIBUTION SYSTEM, SALIDA FRWY BYPASS HWY 99 (SHTS 5, 7A & 9 OF 17)
383619	–	TIE IN 12" & 8" MAIN AT KIERNAN AVE.

SAFETY
SAFETY PLEDGE
I ALWAYS PUT SAFETY FIRST.
I LOOK FOR AND ACT TO RESOLVE UNSAFE SITUATIONS.
I HELP AND ENCOURAGE OTHERS TO ACT SAFELY.

GTS
575 Lennon Ln. #250
Walnut Creek, CA (925) 478-8530
www.gtsinc.us
Project No. 13027

CALL: 811

NO.	DATE	DESCRIPTION	GM/SPEC	DWN	CHKD	SUPV	APVD BY
A		ISSUED FOR BID	41617922				

REVISIONS

EXPENSE PSRS# 25889
CAPITAL PSRS# 29168

APPROVED BY: GM 41617922
SUPV
DSGN
DWN FJCI
CHKD CAF
OK IGH
DATE
SCALES AS SHOWN

HYDROTEST T-038-13
DFM 1615-01
MP 0.02 – 10.12
MODESTO, CALIFORNIA

PACIFIC GAS AND ELECTRIC COMPANY
SAN RAMON, CALIFORNIA

BILL OF MATL SHEET 13
DWG LIST
SUPSDS
SUPSD BY
SHEET NO. 01 OF 13 SHEETS

41617922 A

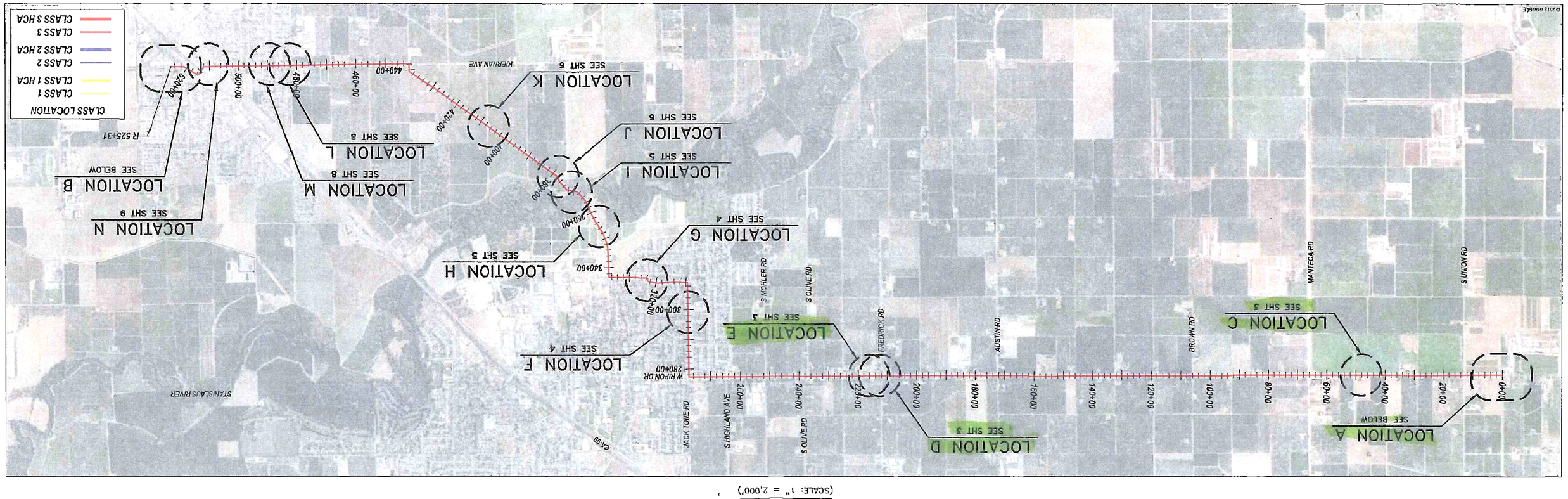

PLAN VIEW
(SCALE: 1" = 2,000')

ESTIMATED VOLUME OF WATER
LOCATION A TO B TEST: 322,000 GALLONS.

LOCATION A
RIPON MODESTO METER STA–5788 W RIPON RD
WALL MAP – 3116; PLAT – 17; BLOCK – 2; MP – 0.02
(SCALE: 1" = 60')

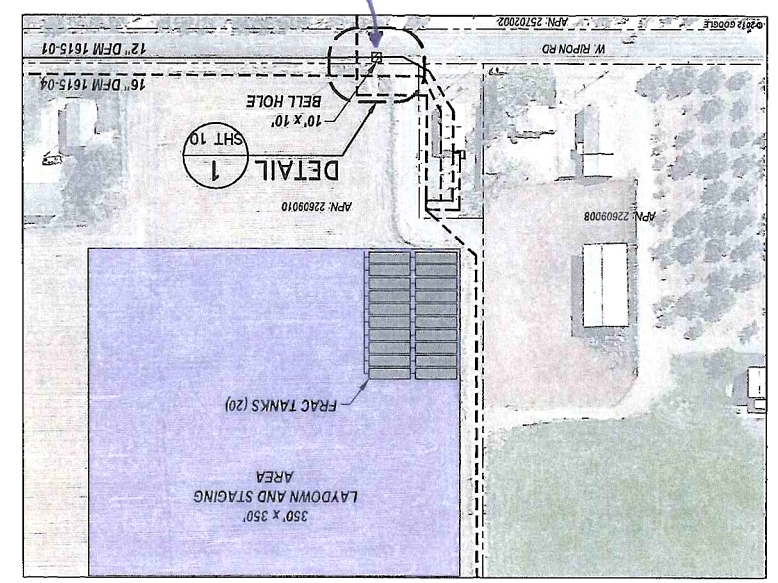

LOCATION B
4735 KIERNAN CT. – MLV–9.75
WALL MAP – 3176; PLAT – B2; BLOCK – 4; MP – 10.2
(SCALE: 1" = 60')

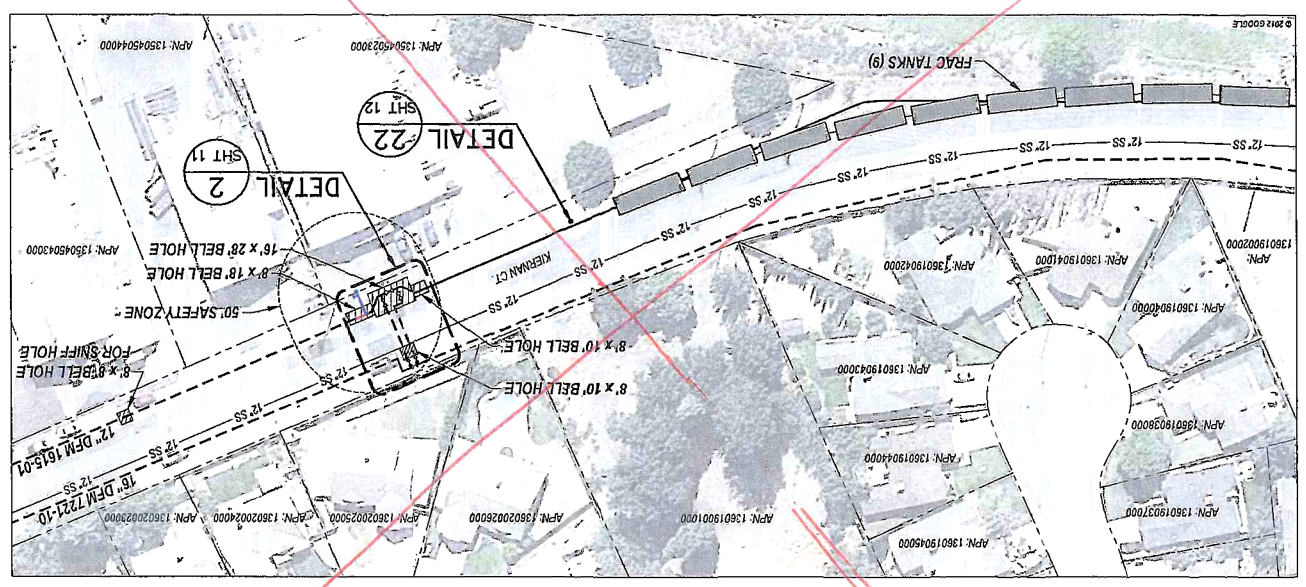
8' x 10' BELL HOLE
8' x 10' BELL HOLE
8' x 8' BELL HOLE
FOR SNIFF HOLE
50' SAFETY ZONE
8' x 18' BELL HOLE
16' x 28' BELL HOLE
DETAIL 2
SHT 11
DETAIL 22
SHT 12
FRAC TANKS (9)
KIERNAN CT
12" SS
16" DEM 1221-10
12" DEM 1615-01
APN: 1360190600
APN: 1360190400
APN: 1360190200
APN: 1360190400
APN: 1360190400
APN: 1360190400

LOCATION C
7041 W RIPON RD
WALL MAP – 3117; PLAT – I1; BLOCK – N/A; MP – 0.9400
(SCALE: 1" = 60')

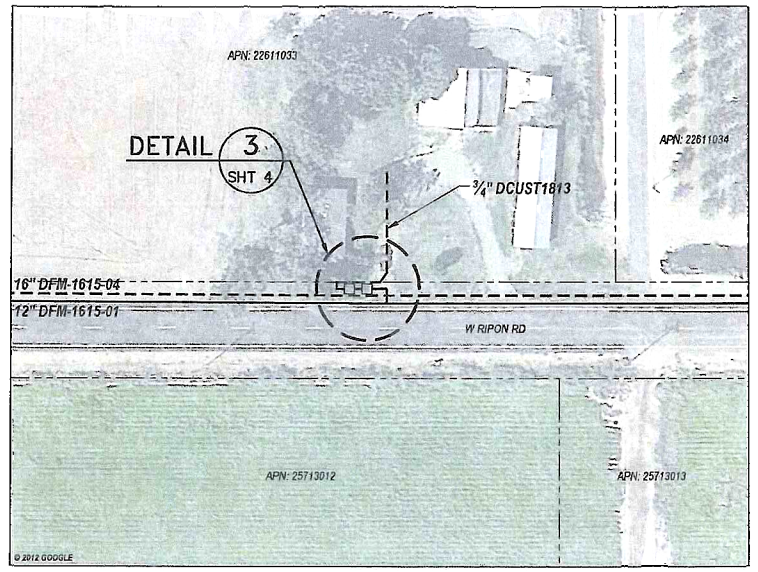

LOCATION D
FREDRICK RD & W RIPON RD
WALL MAP – 3177; PLAT – I8; BLOCK – N/A; MP – 4.05
(SCALE: 1" = 60')

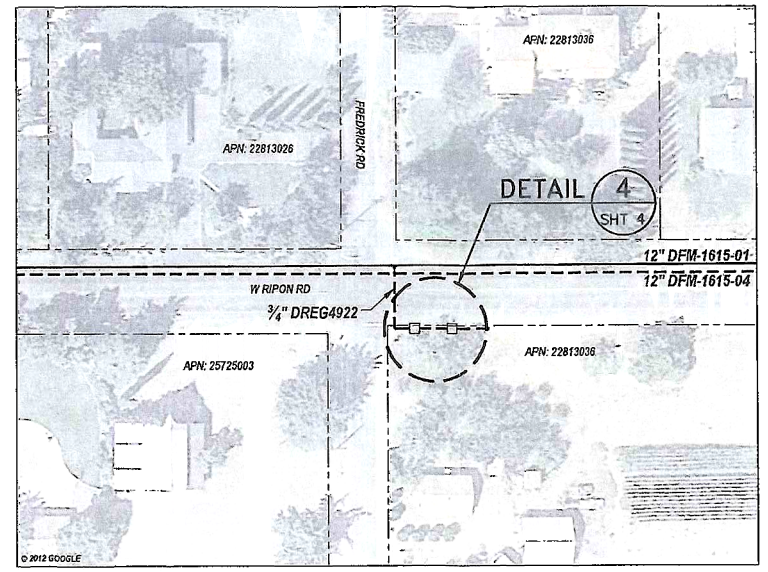

LOCATION E
11781 W RIPON RD
WALL MAP – 3177; PLAT – I8; BLOCK – N/A; MP – 4.17
(SCALE: 1" = 60')

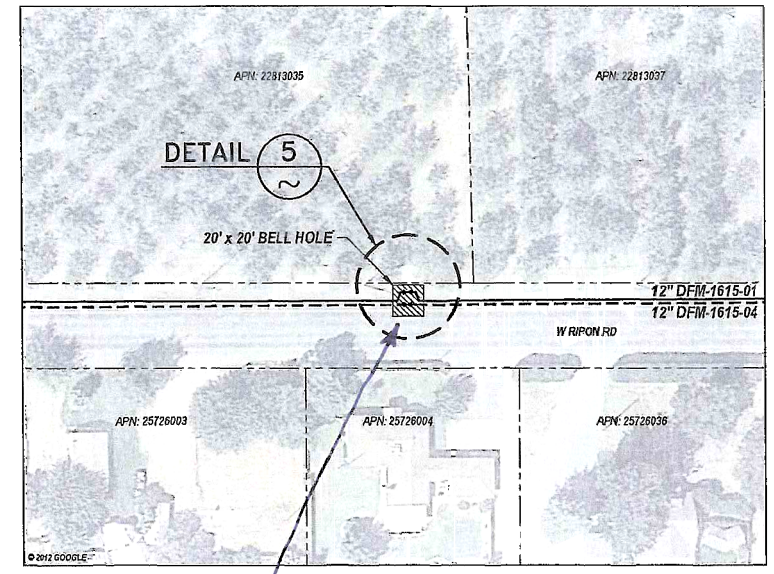

BELL HOLE IN PAVEMENT

JOB NO. 30963041
BOM # 108
DESIGN CRITERIA
LOCATION CLASS 1
DESIGN FACTOR 0.5
FDP 720 PSIG 34.97 % SMYS
MAOP 720 PSIG 34.97 % SMYS
STRENGTH TEST PRESSURE
MAX. 1230 PSIG 59.74 % SMYS
MIN. 1080 PSIG 52.46 % SMYS
1853 PSIG=90% SMYS
TEST MEDIUM WATER
PIPE SPEC API 5L, GR B, SMLS
O.D 12.750"
W.T. 0.375"
WELD INSPECTION (GAS STD.D-40)*
☒ RADIOGRAPHIC:
☐ 20% MIN. (% OF EACH WELDER'S DAILY WORK)
☒ 100%
*VISUALLY INSPECT 100% OF ALL WELDS THAT ARE NOT RADIOGRAPHICALLY INSPECTED. (THIS REQUIREMENT APPLIES EVEN IF NO RADIOGRAPHIC INSPECTION IS REQUIRED.)

JOB NO. 30963041
BOM # 109
DESIGN CRITERIA
LOCATION CLASS 1
DESIGN FACTOR 0.5
FDP 720 PSIG 31.41 % SMYS
MAOP 720 PSIG 31.41 % SMYS
STRENGTH TEST PRESSURE
MAX 1205 PSIG 52.57 % SMYS
MIN. 1080 PSIG 47.12 % SMYS
2063 PSIG=90% SMYS
TEST MEDIUM WATER
PIPE SPEC API 5L, X-52, HFW
O.D. 12.750"
W.T. 0.281"
WELD INSPECTION (GAS STD.D-40)*
☒ RADIOGRAPHIC:
☐ 20% MIN. (% OF EACH WELDER'S DAILY WORK)
☒ 100%
*VISUALLY INSPECT 100% OF ALL WELDS THAT ARE NOT RADIOGRAPHICALLY INSPECTED. (THIS REQUIREMENT APPLIES EVEN IF NO RADIOGRAPHIC INSPECTION IS REQUIRED.)

JOB NO. 30963041
BOM # 114
DESIGN CRITERIA
LOCATION CLASS 1
DESIGN FACTOR 0.5
FDP 720 PSIG 19.53 % SMYS
MAOP 720 PSIG 19.53 % SMYS
STRENGTH TEST PRESSURE
MAX. 1230 PSIG 33.36 % SMYS
MIN. 1080 PSIG 29.29 % SMYS
3318 PSIG=90% SMYS
TEST MEDIUM WATER
PIPE SPEC API 5L, GR B, SMLS
O.D. 4.500"
W.T. 0.237"
WELD INSPECTION (GAS STD.D-40)*
☐ RADIOGRAPHIC:
☐ 20% MIN (% OF EACH WELDER'S DAILY WORK)
☐ 100%
*VISUALLY INSPECT 100% OF ALL WELDS THAT ARE NOT RADIOGRAPHICALLY INSPECTED. (THIS REQUIREMENT APPLIES EVEN IF NO RADIOGRAPHIC INSPECTION IS REQUIRED.)

JOB NO 30963041
BOM # 112
DESIGN CRITERIA
LOCATION CLASS 3
DESIGN FACTOR 0.5
FDP 720 PSIG 27.55 % SMYS
MAOP 720 PSIG 27.55 % SMYS
STRENGTH TEST PRESSURE
MAX. 1230 PSIG 47.07 % SMYS
MIN. 1080 PSIG 41.33 % SMYS
2352 PSIG=90% SMYS
TEST MEDIUM WATER
PIPE SPEC API 5L, GR B, SMLS
O.D 8.625"
W.T 0.322"
WELD INSPECTION (GAS STD.D-40)*
☒ RADIOGRAPHIC:
☐ 20% MIN. (% OF EACH WELDER'S DAILY WORK)
☒ 100%
*VISUALLY INSPECT 100% OF ALL WELDS THAT ARE NOT RADIOGRAPHICALLY INSPECTED. (THIS REQUIREMENT APPLIES EVEN IF NO RADIOGRAPHIC INSPECTION IS REQUIRED.)

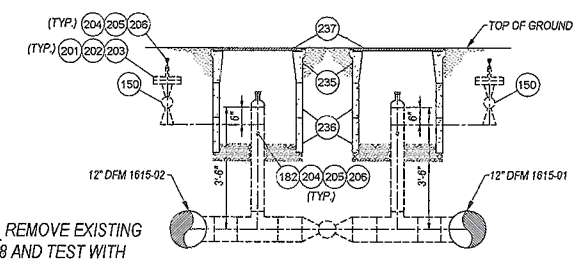

NOTE: REMOVE EXISTING 12" 4.18 AND TEST WITH MLV ASSEMBLY TIE-IN PIECE

ELEVATION A
SCALE: 3/8" = 1'

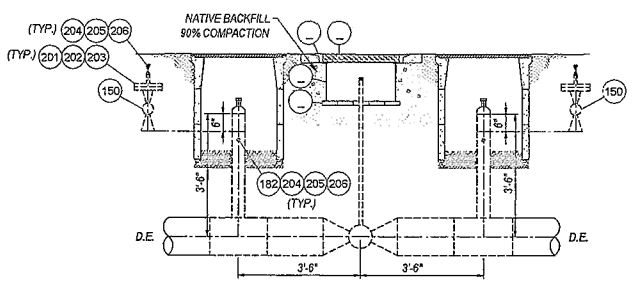

ELEVATION B
SCALE: 3/8" = 1'

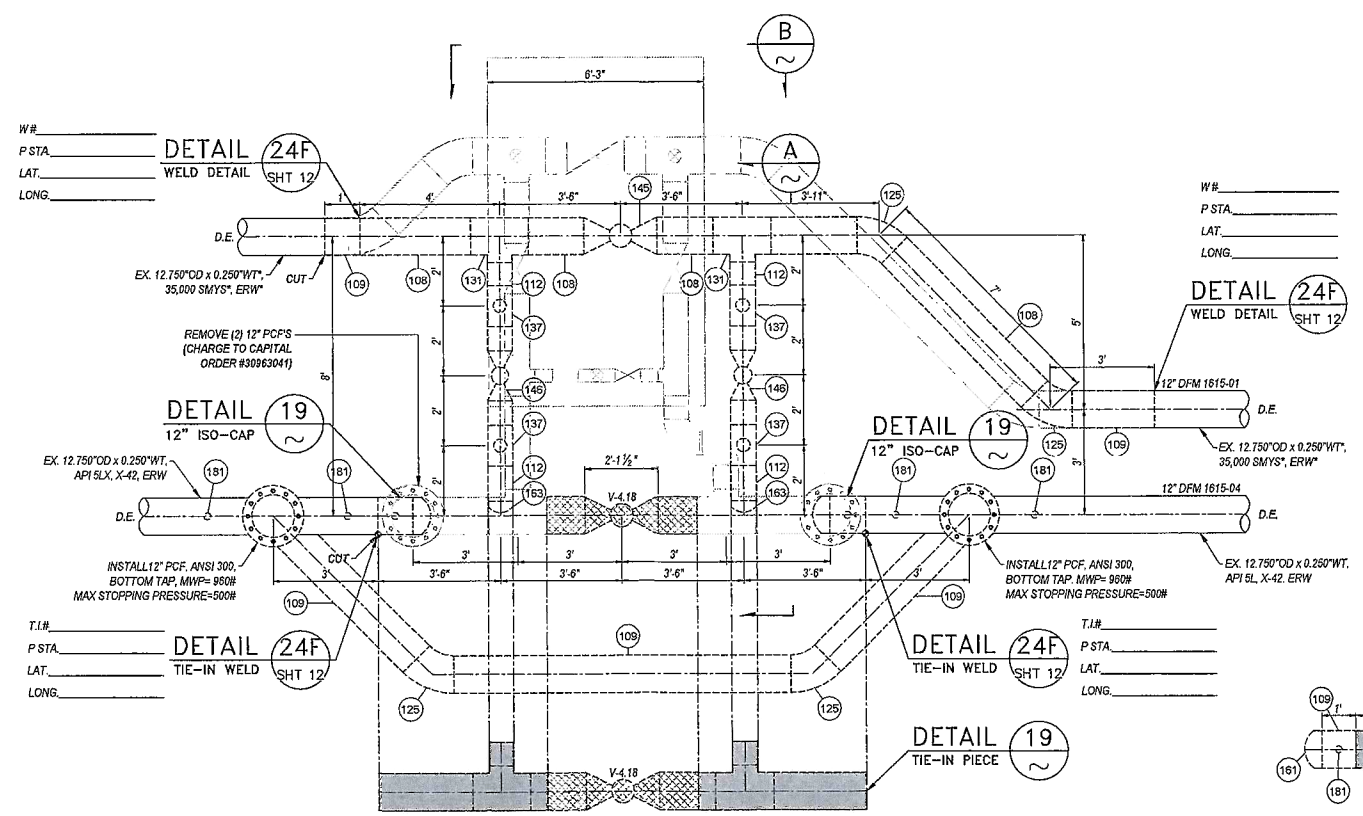

DETAIL 5
SCALE: 3/8" = 1'
REPLACE MLV ASSEMBLY
LOC E: E/O FREDERICK RD & W RIPON RD

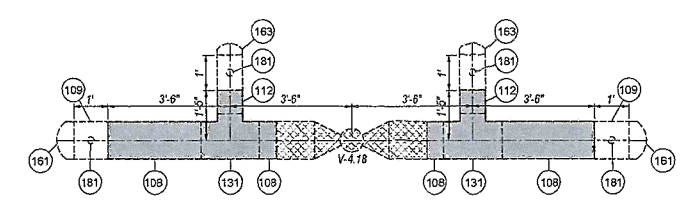

DETAIL 19
SCALE: 3/8" = 1'
TIE-IN PIECE & ISO-CAPS
LOC E: MLV REPLCAMENT

GM 127407 (1954)
GM 119396 (1953)

EXIST PIPE SPECS
HEADER SIZE: 12.750"
PIPE SPECS: 35,000 SMYS*, ERW*
WALL THICKNESS: 0.250"
PRESENT MAOP: 408
% SMYS @ MAOP: 29.73
MAXIMUM ALLOWABLE PRESSURE DURING WELDING (G.S.&S. D-22)
EVALUATE THE FOLLOWING OPERATING PRESSURE LIMITATIONS TO DETERMINE THE MAXIMUM OPERATING PRESSURE PERMITTED DURING WELDING
A) (408 PSIG) WHEN WELDING ON BODY OF THE PIPE, UNLESS,
B) (275 PSIG) WHEN WELDING WITHIN 3" OF THE LONGITUDINAL SEAM (EXCEPT DSAW PIPE),THE CIRCUMFERENTIAL AND ANY BRANCH WELD OR WITHIN 3" OF ANY DENT, GOUGE, ARC BURN OR LAMINATIONS, LOC'I IN THE PIPE WHICH EXCEEDS 1/3 OF THE NOMINAL WALL THICKNESS IN DEPTH AND/OR 1/4 OF THE NOMINAL PIPE DIAMETER IN LENGTH.

GM 1949296 (1988)

EXIST PIPE SPECS
HEADER SIZE: 12.750"
PIPE SPECS: API 5LX, X-42, ERW
WALL THICKNESS: 0.281"
PRESENT MAOP: 408
% SMYS @ MAOP: 22.04
MAXIMUM ALLOWABLE PRESSURE DURING WELDING (G.S.&S. D-22)
EVALUATE THE FOLLOWING OPERATING PRESSURE LIMITATIONS TO DETERMINE THE MAXIMUM OPERATING PRESSURE PERMITTED DURING WELDING
A) (408 PSIG) WHEN WELDING ON BODY OF THE PIPE, UNLESS,
B) (370 PSIG) WHEN WELDING WITHIN 3" OF THE LONGITUDINAL SEAM (EXCEPT DSAW PIPE),THE CIRCUMFERENTIAL AND ANY BRANCH WELD OR WITHIN 3" OF ANY DENT, GOUGE, ARC BURN OR LAMINATIONS, LOC'I IN THE PIPE WHICH EXCEEDS 1/3 OF THE NOMINAL WALL THICKNESS IN DEPTH AND/OR 1/4 OF THE NOMINAL PIPE DIAMETER IN LENGTH.

SAFETY
SAFETY PLEDGE
I ALWAYS PUT SAFETY FIRST.
I LOOK FOR AND ACT TO RESOLVE UNSAFE SITUATIONS.
I HELP AND ENCOURAGE OTHERS TO ACT SAFELY.

GTS
575 Lennon Ln. #250
Walnut Creek, CA (925) 478-8530
www.gtsinc.us
Project No. 13027

REGISTERED PROFESSIONAL ENGINEER
MARK A. CABRAL
No. M26602
Exp. _____
MECHANICAL
STATE OF CALIFORNIA

UNDERGROUND SERVICE ALERT USA
CALL TWO WORKING DAYS BEFORE YOU DIG
CALL: 811

NO.	DATE	DESCRIPTION	CM/SPEC	DWN	CHKD	SUPV	APVD BY
A		ISSUED FOR BID	41617922				

REVISIONS

APPROVED BY	GM 41617922
	SUPV
	DSGN
	DWN FJCI
	CHKD CAF
	OK IGH
DATE	
SCALES	AS SHOWN

HYDROTEST T-038-13
DFM 1615-01
MP 0.02 – 10.12
MODESTO, CALIFORNIA

PACIFIC GAS AND ELECTRIC COMPANY
SAN RAMON, CALIFORNIA

BILL OF MATL SHEET 13
DWG LIST
SUPSDS
SUPSD BY
SHEET NO. 03 OF 13 SHEETS

41617922 A

LOCATION F

JENNIFER ST & JACKTONE RD

WALL MAP – 3118; PLAT – J1; BLOCK – N/A; MP – 5.78 & 5.7984

(SCALE: 1" = 60')

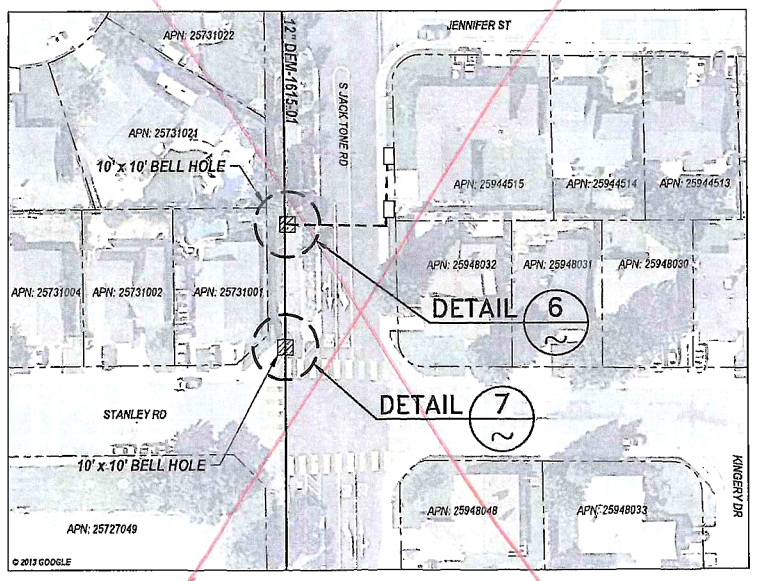

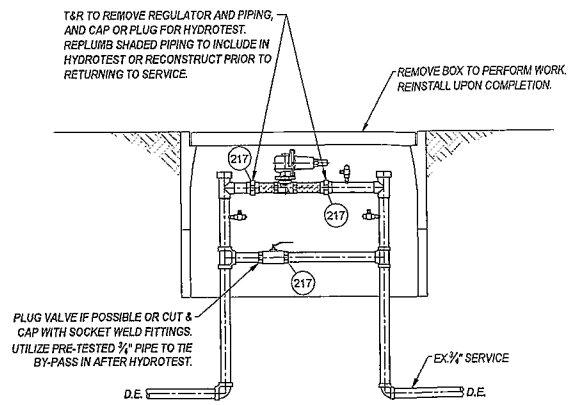

DETAIL 3 — NOT TO SCALE — SHT 3 — ISOLATE 3/4" HPR SET

LOC C: 7041 W RIPON RD – DCUST1813

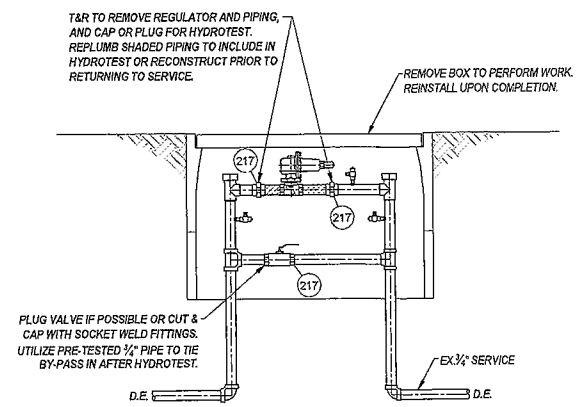

DETAIL 4 — NOT TO SCALE — SHT 3 — ISOLATE 3/4" HPR SET

LOC D: FREDERICK RD & W RIPON RD – DREG4922

LOCATION G

7TH ST & ROBERT AVE

WALL MAP – 3118; PLAT – J3; BLOCK – N/A; MP – 6.2606

(SCALE: 1" = 60')

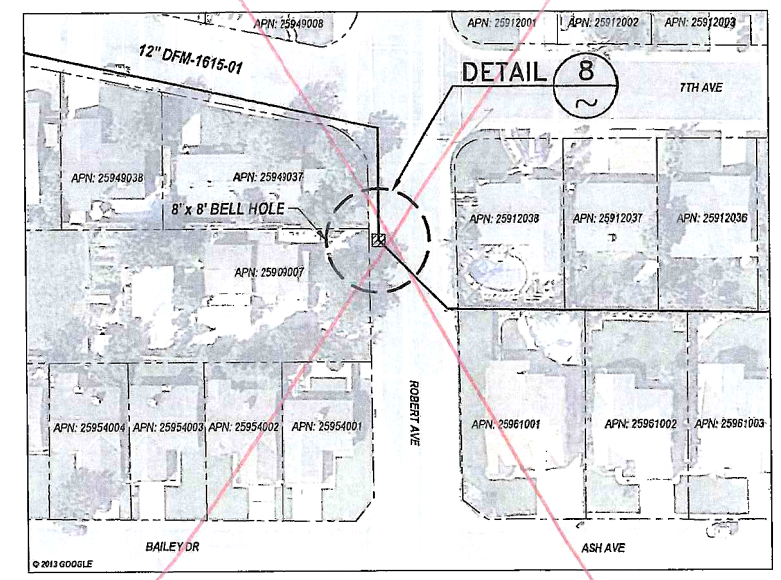

JOB NO. 30963041
BOM # 109

DESIGN CRITERIA

LOCATION CLASS 1
DESIGN FACTOR 0.5
FDP 720 PSIG 31.41 % SMYS
MAOP 720 PSIG 31.41 % SMYS
STRENGTH TEST PRESSURE
MAX. 1205 PSIG 52.57 % SMYS
MIN 1080 PSIG 47.12 % SMYS
2053 PSIG=90% SMYS
TEST MEDIUM WATER
PIPE SPEC API 5L, X-52, HFW
O.D. 12.750"
W.T. 0.281"
WELD INSPECTION (GAS STD.D-40)*
☒ RADIOGRAPHIC:
☐ 20% MIN. (% OF EACH WELDER'S DAILY WORK)
☒ 100%
*VISUALLY INSPECT 100% OF ALL WELDS THAT ARE NOT RADIOGRAPHICALLY INSPECTED. (THIS REQUIREMENT APPLIES EVEN IF NO RADIOGRAPHIC INSPECTION IS REQUIRED.)

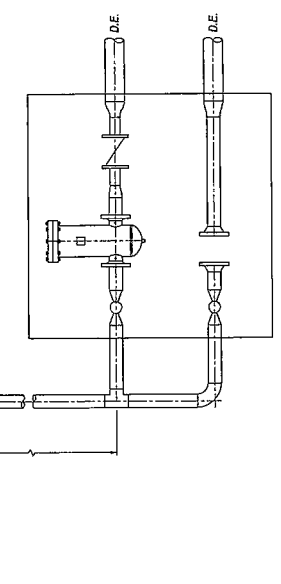

W#
P STA.
LAT.
LONG.
DETAIL WELD DETAIL SHT 12

W#
P STA.
LAT.
LONG.
DETAIL WELD DETAIL SHT 12

DETAIL 6 — SCALE: 3/8" = 1' — ISOLATE 4" TAP

LOC F: S/O JENNIFER ST & S JACKSTONE RD

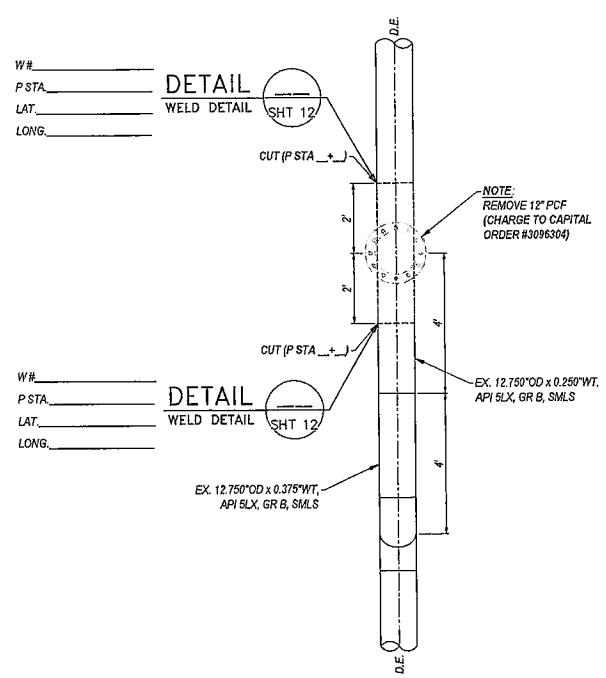

W#
P STA.
LAT.
LONG.
DETAIL WELD DETAIL SHT 12

W#
P STA.
LAT.
LONG.
DETAIL WELD DETAIL SHT 12

DETAIL 7 — SCALE: 3/8" = 1' — REMOVE 12" PCF

LOC F: STANLEY RD & S JACKSTONE RD

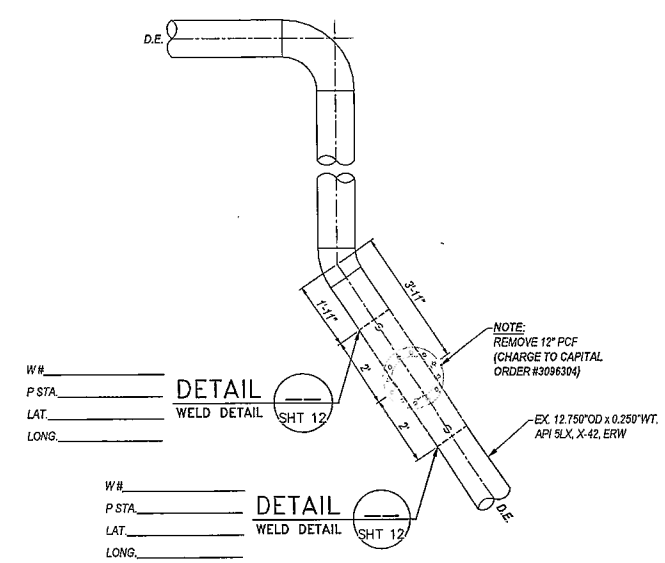

W#
P STA.
LAT.
LONG.
DETAIL WELD DETAIL SHT 12

W#
P STA.
LAT.
LONG.
DETAIL WELD DETAIL SHT 12

DETAIL 8 — SCALE: 3/8" = 1' — REMOVE 12" PCF

LOC: G 7TH AVE & ROBERT AVE

GM _____ (19__)

EXIST PIPE SPECS
HEADER SIZE:
PIPE SPECS:
WALL THICKNESS: 0.__"
PRESENT MAOP:
% SMYS @ MAOP:
MAXIMUM ALLOWABLE PRESSURE DURING WELDING (G.S.&S. D-22) EVALUATE THE FOLLOWING OPERATING PRESSURE LIMITATIONS TO DETERMINE THE MAXIMUM OPERATING PRESSURE PERMITTED DURING WELDING: A) (__PSIG) WHEN WELDING ON BODY OF THE PIPE UNLESS, B) (__PSIG) WHEN WELDING WITHIN 3" OF THE LONGITUDINAL SEAM (EXCEPT ERW PIPE) THE CIRCUMFERENTIAL AND ANY BRANCH WELD, OR WITHIN 3" OF ANY ERW PIPE WELD, OR WITHIN 3" OF LAMINATIONS, DENT IN THE PIPE WHICH EXCEEDS 1/8 OF THE NOMINAL WALL THICKNESS IN DEPTH AND/OR 1/4 OF THE NOMINAL PIPE DIAMETER IN LENGTH.

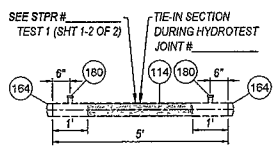

DETAIL — SCALE: 3/8" = 1' — 4" TIE-IN PIECE & ISO-CAPS

HYDROTEST CONFIGURATION

SAFETY

SAFETY PLEDGE

I ALWAYS PUT SAFETY FIRST.
I LOOK FOR AND ACT TO RESOLVE UNSAFE SITUATIONS.
I HELP AND ENCOURAGE OTHERS TO ACT SAFELY.

GTS
575 Lennon Ln. #250
Walnut Creek, CA (925) 478-8530
www.gtsinc.us
Project No. 13027

REGISTERED PROFESSIONAL ENGINEER — MARK A. CABRAL — No. M26602 — Exp. ____ — MECHANICAL — STATE OF CALIFORNIA

UNDERGROUND SERVICE ALERT — USA — CALL BEFORE YOU DIG — CALL: 811

NO.	DATE	DESCRIPTION	GM/SPEC	DWN	CHKD	SUPV	APVD BY
A		ISSUED FOR BID	41617922				

REVISIONS

APPROVED BY	
GM	41617922
SUPV	
DSGN	
DWN	FJCI
CHKD	CAF
OK IGH	
DATE	
SCALES	AS SHOWN

HYDROTEST T-038-13
DFM 1615-01
MP 0.02 – 10.12
MODESTO, CALIFORNIA

PACIFIC GAS AND ELECTRIC COMPANY
SAN RAMON, CALIFORNIA

BILL OF MATL SHEET 13
DWG LIST
SUPSDS
SUPSD BY
SHEET NO. 04 OF 13 SHEETS

41617922 A

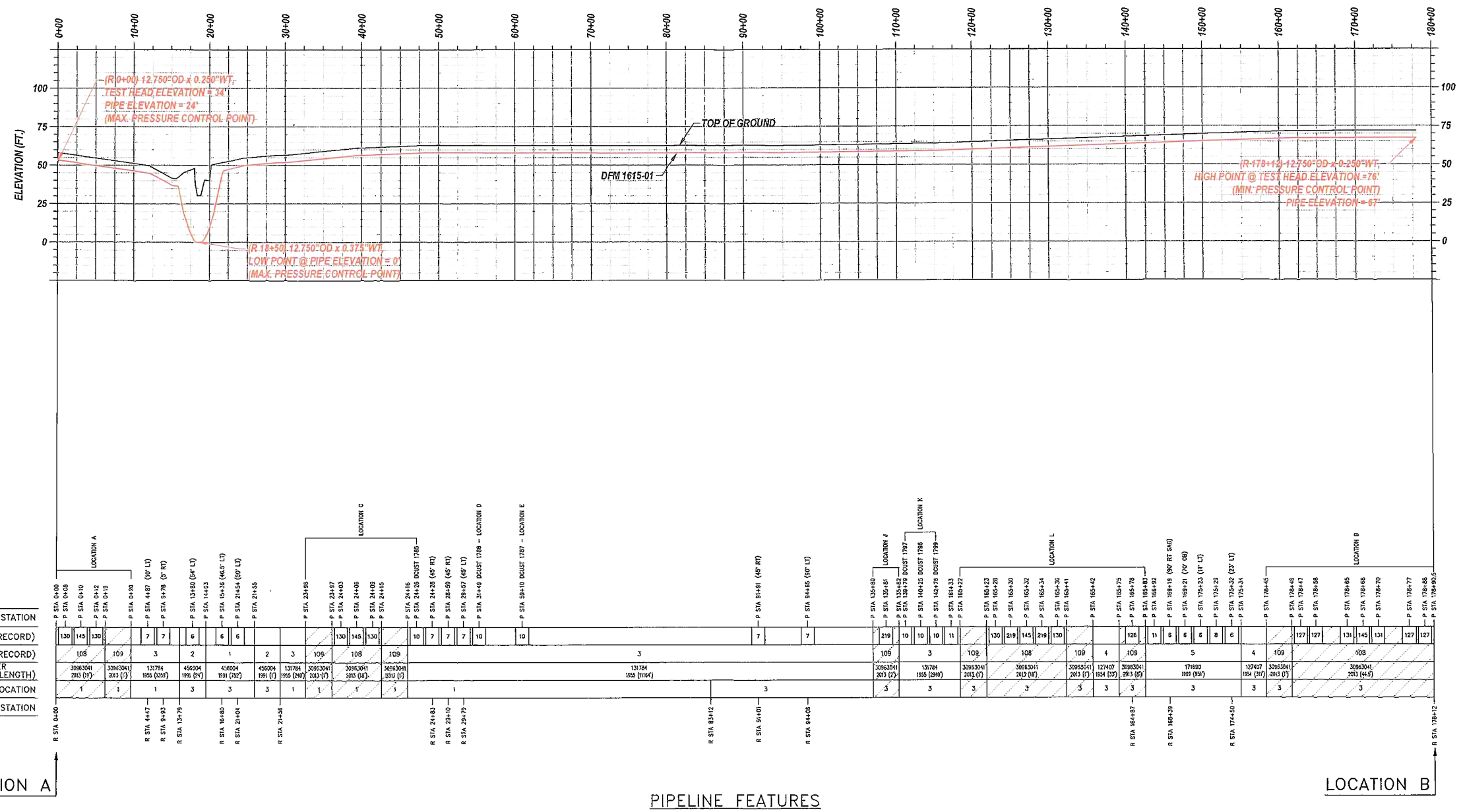

TO BE INSTALLED PRIOR TO HYDROTEST

PIPELINE FEATURES

SEE MATERIAL OF RECORD ON SHEET 12 OF 12

(NOT TO SCALE)

LOCATION	R STA.	ELEV.	SPIKE PRESSURE	MIN. PRESS	MAX. PRESS
MIN. PRESSURE CONTROL POINT	178+12	76'	1188 psig	1080 psig	
MAX. PRESSURE CONTROL POINT	18+50	0'	1222 psig		1160 psig
LOCATION A	0+00	62'	1195 psig	1087 psig	1133 psig
LOCATION B(TEST STATION)	**178+12**	**76'**	**1188 psig**	**1080 psig**	**1126 psig**

NOTE: ELEVATIONS AT TEST LOCATIONS ASSUME TOP OF HYDROTEST PIPING IS 4' ABOVE GROUND ELEVATION

UNDERGROUND SERVICE ALERT USA CALL BEFORE YOU DIG.
CALL: 811

NO.	DATE	DESCRIPTION	GM/SPEC	DWN	CHKD	SUPV	APVD BY
A		ISSUED FOR BID	41617922				

REVISIONS

APPROVED BY: GM 41617922; SUPV; DSGN; DWN FJCI; CHKD CAF; OK TGH; DATE; SCALES AS SHOWN

HYDROTEST T-038-13
DFM 1615-01
MP 0.02 – 10.12
MODESTO, CALIFORNIA

PACIFIC GAS AND ELECTRIC COMPANY
SAN RAMON, CALIFORNIA

SAFETY
SAFETY PLEDGE
I ALWAYS PUT SAFETY FIRST.
I LOOK FOR AND ACT TO RESOLVE UNSAFE SITUATIONS.
I HELP AND ENCOURAGE OTHERS TO ACT SAFELY.

GTS
575 Lennon Ln. #250
Walnut Creek, CA (925) 478-8530
www.gtsinc.us
Project No. 13027

REGISTERED PROFESSIONAL ENGINEER
MARK A. CABRAL
No. M26602
Exp. _____
MECHANICAL
STATE OF CALIFORNIA

BILL OF MATL SHEET 13
DWG LIST
SUPSDS
SUPSD BY
SHEET NO. 10 OF 13 SHEETS

41617922 A

JOB NO. 30963041
BOM # 109

DESIGN CRITERIA

LOCATION CLASS 1
DESIGN FACTOR 0.5
FDP 720 PSIG 31.41 % SMYS
MAOP 720 PSIG 31.41 % SMYS
STRENGTH TEST PRESSURE
MAX. 1205 PSIG 52.57 % SMYS
MIN. 1080 PSIG 47.12 % SMYS
2063 PSIG=90% SMYS
TEST MEDIUM WATER
PIPE SPEC API 5L, X-52, HFW
O.D. 12.750"
W.T. 0.281"
WELD INSPECTION (GAS STD.D-40)*
☒ RADIOGRAPHIC:
☐ 20% MIN. (% OF EACH WELDER'S DAILY WORK)
☒ 100%
*VISUALLY INSPECT 100% OF ALL WELDS THAT ARE NOT RADIOGRAPHICALLY INSPECTED. (THIS REQUIREMENT APPLIES EVEN IF NO RADIOGRAPHIC INSPECTION IS REQUIRED.)

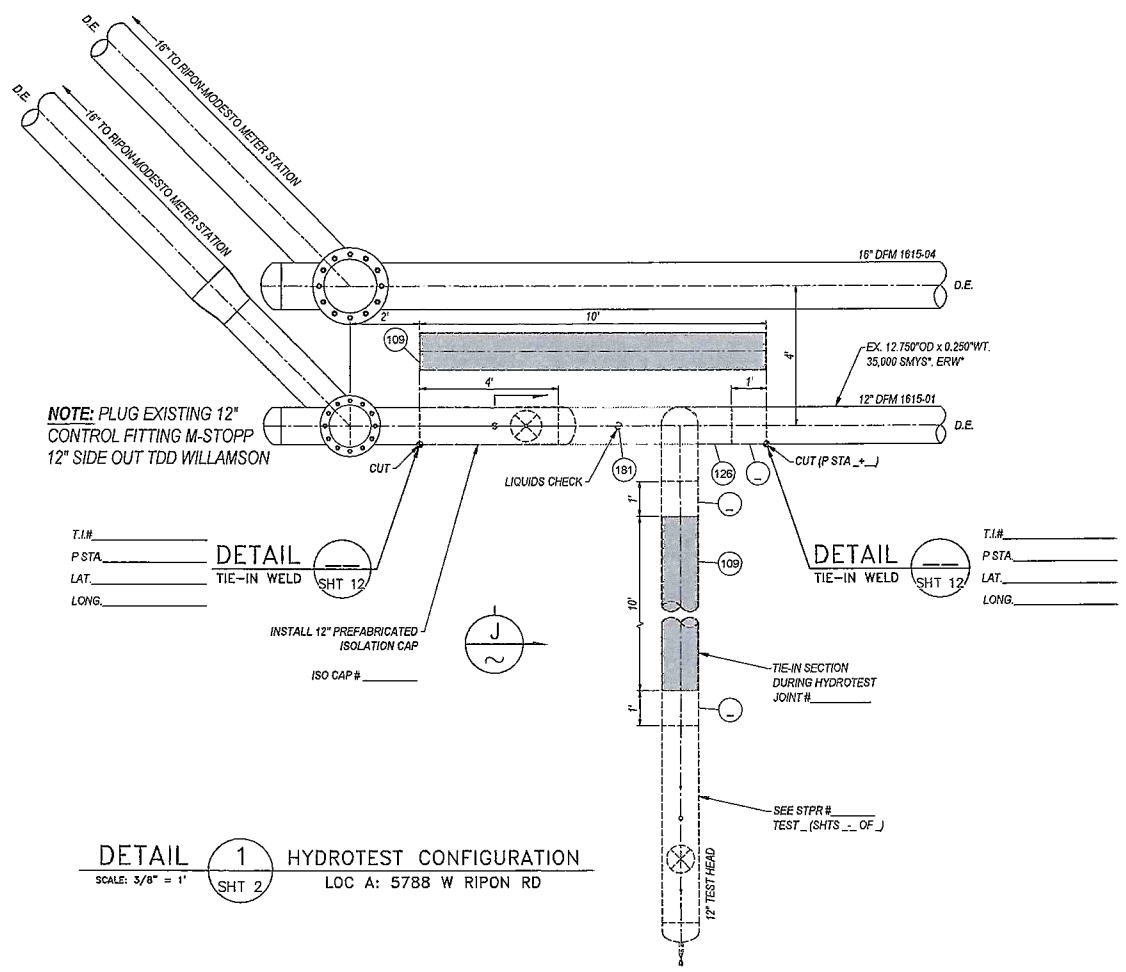

DETAIL 1 SHT 2 HYDROTEST CONFIGURATION
SCALE: 3/8" = 1'
LOC A: 5788 W RIPON RD

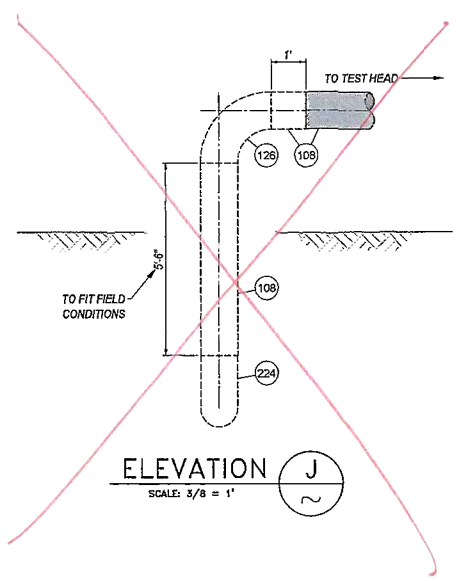

ELEVATION J
SCALE: 3/8" = 1'

GM 119396 (1953)

EXIST PIPE SPECS
HEADER SIZE: 12.750"
PIPE SPECS: 35,000 SMYS*, ERW*
WALL THICKNESS: 0.250"*
PRESENT MAOP: 408
% SMYS @ MAOP: 29.73

MAXIMUM ALLOWABLE PRESSURE DURING WELDING (G.S.&S. D-22)

EVALUATE THE FOLLOWING OPERATING PRESSURE LIMITATIONS TO DETERMINE THE MAXIMUM OPERATING PRESSURE PERMITTED DURING WELDING

A) (408 PSIG) WHEN WELDING ON BODY OF THE PIPE UNLESS,

B) (274 PSIG) WHEN WELDING WITHIN 3" OF THE LONGITUDINAL SEAM (EXCEPT ERW, SMLS), THE CIRCUMFERENTIAL SEAM AND ANY BRACED WELDS OR WITHIN 3" OF ANY DEFECT (SUCH AS DENTS, GOUGES, LAMINATION, ETC.) IN THE PIPE WHICH EXCEEDS 1/3 OF THE NOMINAL WALL THICKNESS IN DEPTH AND/OR 1/4 OF THE NOMINAL PIPE DIAMETER IN LENGTH.

UNDERGROUND SERVICE ALERT USA CALL BEFORE YOU DIG.
CALL: 811

NO.	DATE	DESCRIPTION	GM/SPEC	DWN	CHKD	SUPV	APVD BY
A		ISSUED FOR BID	41617922				

REVISIONS

APPROVED BY	GM 41617922
	SUPV
	DSGN
	DWN FJCI
	CHKD CAF
	CK IGH
	DATE
	SCALES AS SHOWN

HYDROTEST T-038-13
DFM 1615-01
MP 0.02 – 10.12
MODESTO, CALIFORNIA

PACIFIC GAS AND ELECTRIC COMPANY
SAN RAMON, CALIFORNIA

BILL OF MATL SHEET 13
DWG LIST
SUPSDS
SUPSD BY
SHEET NO. 11 OF 13 SHEETS

41617922 A

SAFETY
SAFETY PLEDGE
ALWAYS PUT SAFETY FIRST.
LOOK FOR AND ACT TO RESOLVE UNSAFE SITUATIONS.
HELP AND ENCOURAGE OTHERS TO ACT SAFELY.

GTS
575 Lennon Ln. #250
Walnut Creek, CA (925) 476-8530
www.gtsinc.us
Project No. 13027

REGISTERED PROFESSIONAL ENGINEER
MARK A. CABRAL
No. M26602
Exp. ———
MECHANICAL
STATE OF CALIFORNIA