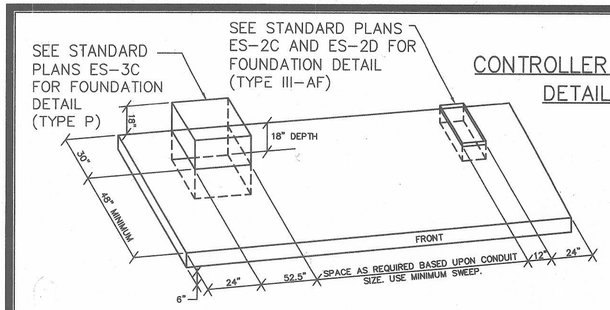

CONTROLLER WALKWAY
DETAIL "A"

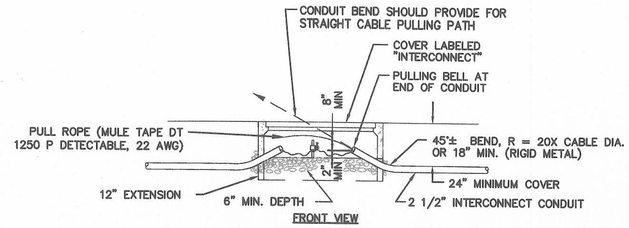

NO. 6 INTERCONNECT PULL BOX AND CONDUIT INSTALLATION DETAILS
DETAIL "B"

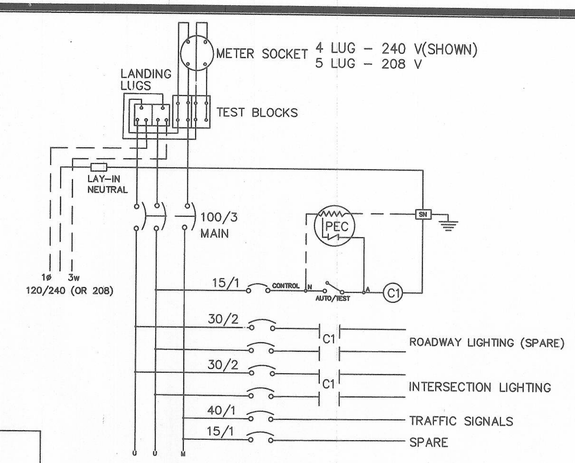

TYPE III-AF SERVICE WIRING DIAGRAM
DETAIL "C"

NOTES:

1. 2 1/2" DIA. RMC INTERCONNECT CONDUIT FOR FIBER-OPTIC CABLE. 90° LARGE RADIUS SWEEP, MIN. R=2' TO 45° SWEEP AT NO. 6 PB (SEE FIG. BELOW).
2. CONTROLLER CABINET SHOULD BE AT MINOR STREET NEARSIDE APPROACH UNLESS SHOWN DIFFERENTLY ON PLANS. DOOR SHOULD FACE STREET.
3. SERVICE METER SHOULD FACE STREET.
4. PEU SHOULD HAVE AN UNOBSTRUCTED VIEW OF AMBIENT LIGHT (PREFERABLY NORTH). IF IT IS NOT POSSIBLE, THEN SOUTH, EAST, AND WEST IN THAT ORDER IS ACCEPTABLE.
5. CONTROLLER CABINET PULL BOX SHALL BE 6T PBW/EXTENSION WITH 1/4"STEEL CHECKER PLATE TRAFFIC COVER WITH HOLD DOWN BOLTS.

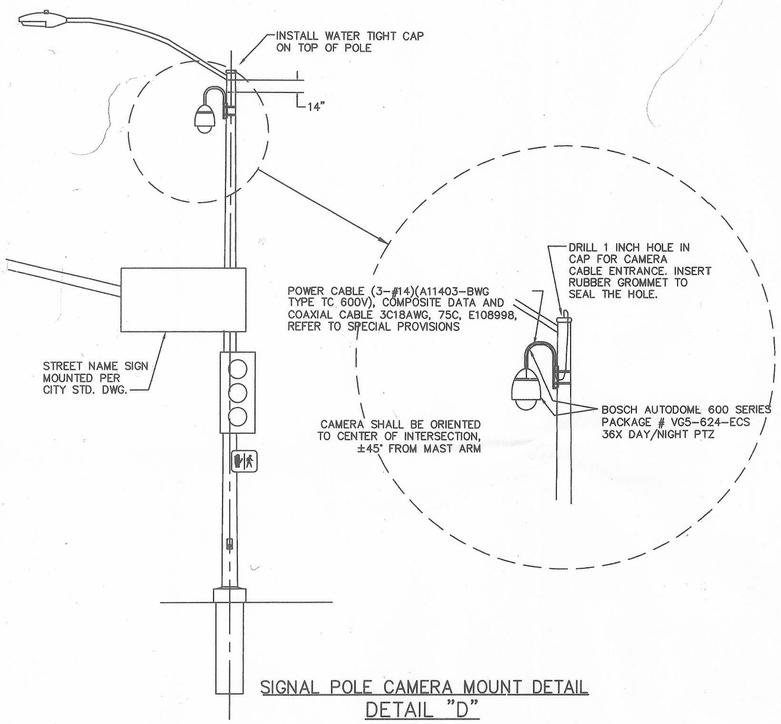

SIGNAL POLE CAMERA MOUNT DETAIL
DETAIL "D"

CONTROLLER CABINET

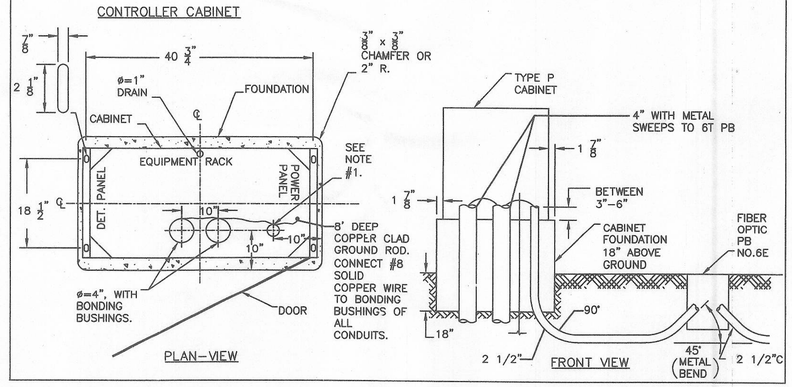

CONTROLLER CABINET LAYOUT DETAILS
DETAIL "E"

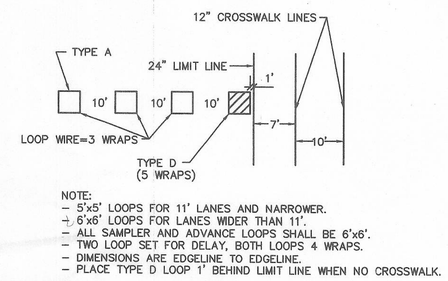

NOTE:
- 5'x5' LOOPS FOR 11' LANES AND NARROWER.
- 6'x6' LOOPS FOR LANES WIDER THAN 11'.
- ALL SAMPLER AND ADVANCE LOOPS SHALL BE 6'x6'.
- TWO LOOP SET FOR DELAY, BOTH LOOPS 4 WRAPS.
- DIMENSIONS ARE EDGELINE TO EDGELINE.
- PLACE TYPE D LOOP 1' BEHIND LIMIT LINE WHEN NO CROSSWALK.

DETECTOR PLACEMENT DETAIL (TYPICAL WITH CROSSWALK)
DETAIL "F"

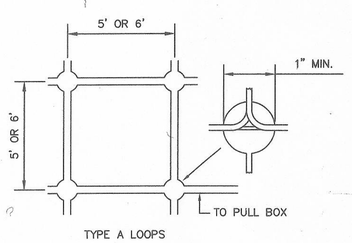

DETECTOR INSTALLATION DETAIL-DRILLED CORNERS
DETAIL "G"

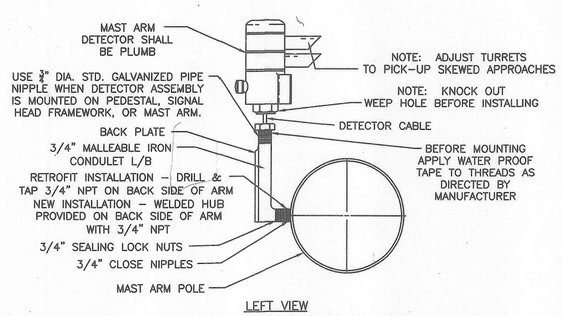

OPTICOM DETECTOR MAST ARM MOUNTING DETAIL
DETAIL "H"

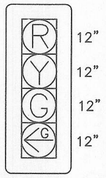

4-SECTION SIGNAL HEAD
DETAIL "I"

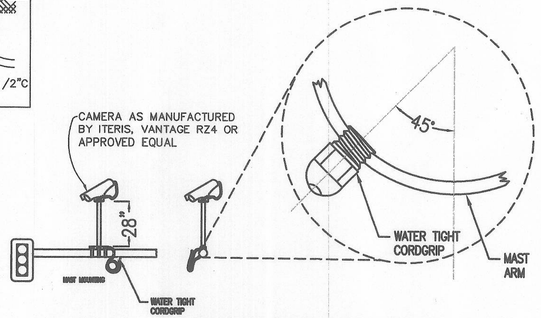

VIDEO DETECTION CAMERA MOUNT
DETAIL "I"

KS Anderson
Transportation Engineers
3853 Taylor Road, Suite G
Loomis, California 95650
(916)660-1555

TRAFFIC SIGNAL DETAILS

MARLETTE ROAD / LOWER SACRAMENTO ROAD INTERSECTION IMPROVEMENTS

REVISIONS			
SYMBOL	DATE	DESCRIPTION	BY	APPROVED

DATE: 2/6/14

FILE NAME: MARLETTE & L SAC

MARLETTE ROAD / LOWER SACRAMENTO ROAD INTERSECTION IMPROVEMENTS

TRAFFIC SIGNAL DETAILS

DEPARTMENT OF PUBLIC WORKS
CITY OF STOCKTON, CALIFORNIA

SCALE: NONE
DESIGNED BY: MB
DRAWN BY: MB
CHECKED BY: KDA
RECORD DWG:

APPROVED BY:
CITY ENGINEER / STOCKTON, CA.
DATE: 3/4/14

SHEET NO. TS-3 OF 15

JOB NO.

5202.10C