BTU AREA • X-01
CP AREA • F-05
WALL MAP 2869
PLAT C3
SAN JOOQUIN COUNTY

L1614–01 & L1614–02
MP 2.22–2.26
N. DAVIS RD @ W. TURNER RD.
PROVIDE METALIC PATH FOR C.P.

SCHEDULE OF SHEETS

SHEET 1 -- GENERAL / CONSTRUCTION NOTES
SHEET 2 -- CONSTRUCTION DETAILS

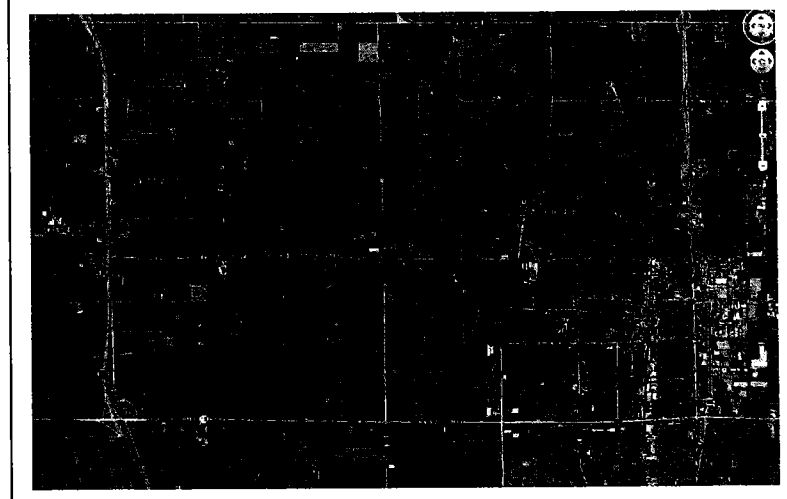

VICINITY SKETCH
NOT TO SCALE

SUMMARY OF PROPOSED WORK:

1. EXCAVATE TRENCH TO EXPOSE L-1614-01, L-1614-02 AND 2" DISTRIBUTION LINE ON DAVIS ROAD FROM MP 2.22 - 2.26.
2. PROVIDE METALIC PATH FOR CATHODIC PROTECTION FROM RECTIFIER ON N. DAVIS ROAD BACK TO TRANSMISSION LINES INTO PEDESTAL BOX ON W. TURNER ROAD.

CONTACT INFORMATION:

PROJECT MANAGER ---- NEERAV MEHTA (510) 290-2224
CORROSION ENGINEER ---- MICHAEL BRIONES (925) 708-1767
ESTIMATOR / DESIGNER ---- CANDACE CHESNUTT (925) 244-3178
CORROSION MECHANIC ---- BILL BELASKI(209) 942-6550
LAND DEPARTMENT ---- SANDEE HUFANA (925) 328-5056
G.C. FIELD ENGINEER ---- JONATHAN OCCHIPINTI(408) 891-3082

SEQUENCE OF OPERATIONS

JOB DESCRIPTION
OPERATING MAP 385160

1. SET UP TRAFFIC SAFETY SCENE AND LOCATE GAS LINES.
2. MOUNT PEDESTAL BOX ON 4" X 4" POLE AT EYE LEVEL IN BETWEEN GS BOX AND AT&T OWNED POLE AS SHOWN ON DRAWING.
3. TRENCH FROM ALL 3 PIPES TO PEDESTAL BOX:
4. ATTACH WIRES TO STEEL PIPES WITH HANDY CAPS (GAS STD. 0-10) AND LIQUID ADHESIVE (GAS STD. E-27).
5. ENCLOSE WIRES AND ATTACH TO 4"x4" POST WITH CONDUIT PER LOCAL CODES.
6. ENSURE THAT THERE IS CURRENT TO ALL 3 GAS LINES.
7. BACKFILL EXCAVATION PER TRENCH DETAIL.

CONSTRUCTION NOTES:

1) WELDING REQUIREMENTS:
ALL ARC WELDING IS TO BE PERFORMED IN ACCORDANCE WITH GAS STANDARD D-22. ALL CANS AND SPOOLS SHALL BE A MINIMUM OF ONE PIPE DIAMETER, WHENEVER POSSIBLE
WELDING VALVES AND FITTINGS:
WHEN 16" AND LARGER VALVES AND FITTINGS ARE WELDED TO EACH OTHER OR TO PIPE, THE JOINT SHALL HAVE A TWO PASS WELD ON THE INSIDE, AS WELL AS THE OUTSIDE WELD, IF THE INTERNAL MISALIGNMENT EXCEEDS $^{3}/_{32}$". THIS REQUIREMENT ALSO APPLIES TO SMALLER DIAMETER VALVES AND FITTINGS WHEN IT IS PRACTICAL.
WELD SOAP TEST:
ALL WELDS THAT HAVE NOT BEEN HYDRO TESTED AND ALL FITTINGS SHALL BE SOAP TESTED AT 100PSI AND OPERATING PRESSURE.

2) HYDROSTATIC TEST REQUIREMENTS
HYDROSTATIC TESTING SHALL MEET PRESSURE AND DURATION REQUIREMENTS OF GAS STANDARD A-34 AND SHALL BE CONDUCTED IN ACCORDANCE WITH GAS STANDARD TD-4137. SEE ATTACHED STPR.

3) PAINTING AND COATING REQUIREMENTS
ALL EXPOSED PIPE AND FITTINGS ARE TO BE PAINTED IN ACCORDANCE WITH GAS STANDARD E-30.
ALL COATING ON BURIED PIPE AND FITTINGS ARE TO BE APPLIED IN ACCORDANCE WITH GAS STANDARD E-35. FOR COATING SELECTIONS ON BURIED PIPE SEE DIRECT BURIAL SELECTIONS TABLE.

4) CALL USA AT LEAST TWO WORKING DAYS PRIOR TO EXCAVATION (811).

5) LOCATION OF EXISTING SUBSTRUCTURES ARE APPROXIMATE. BEFORE POWER OR HEAVY EQUIPMENT IS USED FOR EXCAVATION, THE EXACT DEPTH AND LOCATION OF SUBSTRUCTURES SHALL FIRST BE DETERMINED BY HAND EXCAVATION, IF NECESSARY.

6) ALL BENDS ARE SMOOTH FIELD BENDS EXCEPT WHERE ELBOWS ARE NOTED. FIELD BEND SHALL BE MADE IN ACCORDANCE WITH GAS STANDARD A-36 SECTION 4-D.

7) ALL ANGLES SHOWN IN THE PLAN AND PROFILE ARE APPROXIMATE AND SHALL BE CUT TO SUIT FIELD CONDITION.

8) THIS PIPELINE MUST BE INSTALLED WITH AT LEAST 12 INCHES OF CLEARANCE FROM ANY OTHER UNDERGROUND STRUCTURE NOT ASSOCIATED WITH THE PIPELINE.

9) COATING REMOVAL
BEFORE REMOVING THE PIPE COATING ON PRE-1972 PIPE (DOES NOT INCLUDE PLASTIC TAPE OR FUSIONBONDED EPOXY COATINGS) THE FOLLOWING STEPS SHALL BE TAKEN:
A) FOR ALL NON-EMERGENCY WORK, PRE-1972 PIPE WRAP MUST BE EVALUATED TO DETERMINE IF IT CONTAINS ASBESTOS PRIOR TO REMOVAL.
B) FOR EMERGENCY WORK ON PRE-1972 PIPE, ASSUME THE WRAP CONTAINS > 1% ASBESTOS UNTIL THE WRAP CAN BE TESTED.
C) OBTAIN SAMPLES OF THE WRAP, AND HAVE SAMPLES TESTED FOR ASBESTOS IN ACCORDANCE WITH W.P.-4711.
D) TEST RESULTS ARE TO BE INCLUDED WITH AS-BUILTS.
E) FOLLOW PROCEDURE IN W.P.-4711 FOR REMOVAL OF PIPE WRAP.

10) IN ORDER THAT THE CP DEPARTMENT CAN CONDUCT A REVIEW OF THE INTERNAL CONDITION OF THE PIPELINE, APPROXIMATELY TWO DAYS PRIOR TO THE TIE-IN, NOTIFY GLEN RIDDLE AT 760-954-3274 OR BILL GRAVES AT 805-423-7924 IN THE CP DEPARTMENT.

11) DEACTIVATION AND/OR RETIREMENT OF UNDERGROUND GAS FACILITIES SHALL BE DONE IN ACCORDANCE WITH UTILITY PROCEDURE TD-9500P-16.

DESIGN & CONSTRUCTION REVIEW FOR INTERNAL CORROSION

DESCRIPTION	ACTION SELECTED	INITIAL	DATE
CORROSION ENGINEER HAS REVIEWED THIS LOCATION AND THERE IS NO KNOWN THREAT OF INTERNAL CORROSION. NO INTERNAL CORROSION DESIGN OR CONSTRUCTION CONSIDERATIONS ARE NECESSARY.	N/A		
INTERNAL CORROSION MAY BE A THREAT AND THE CONSTRUCTION DESIGNS HAVE BEEN REVIEWED WITH CORROSION ENGINEERING. DOCUMENTATION OF THE REVIEW AND ACTIONS TAKEN ARE IN THE JOB PACKAGE AND INCORPORATED IN THIS DESIGN.	N/A		

ENVIRONMENTAL ISSUES

☐ NONE APPARENT (IF PROJECT DESIGN CHANGES, CONTACT RESPONSIBLE ENGR)
☒ PERMITS ☐ TAILBOARD ☐ OTHER
☐ APPLICANT DESIGN/RESPONSIBILITY (CHECK PERMITS BOX IF PERMIT CONDITIONS APPLY TO PG&E ACTIONS)
BY: Signature, name, (Corporate ID), date

NOTIFIED U.S.A.
DATE
TICKET NUMBER
BY

DIRECT BURIAL COATING SELECTIONS

LISTED IN ORDER OF PREFERENCE

MAIN LINE COATING	FBE
MINOR REPAIRS	PROTAL 7200, POWERCRETE J
TIE-IN WELDS	PROTAL 7200, POWERCRETE J
GIRTH WELDS	PROTAL 7200, POWERCRETE J
BUTT WELDED FITTINGS	PROTAL 7200, POWERCRETE J
VALVE ASSEMBLIES	PROTAL 7200, POWERCRETE J
SHORT SEGMENTS OF PIPE	PROTAL 7200, POWERCRETE J
AIR-TO-SOIL TRANSITIONS	DEVGRIP 238, POWERCRETE J
PRESSURE CONTROL FITTINGS BODY	PROTAL 7200
FLANGE	WAX TAPE

BORED COATING SELECTIONS

LISTED IN ORDER OF PREFERENCE

MAIN LINE COATING	ARC APPLIED OVER FBE
MINOR REPAIRS	PROTAL 7200, POWERCRETE J
GIRTH WELDS	PROTAL 7200, POWERCRETE J

NOTES:
1) CONTACT THE RESPONSIBLE PIPELINE ENGINEER TO REQUEST A VARIANCE FROM THE ABOVE COATING SELECTIONS
2) ALL COATINGS ARE TO BE APPLIED IN ACCORDANCE WITH GS&S E-30 AND E-35

UNDERGROUND SERVICE ALERT USA CALL BEFORE YOU DIG
CALL: 811

Installation Tested or Inspected and Noted on Drawing. All Levels Satisfactory per PG&E GS&S 0-16

Qualified Employee — Date

Corrosion mechanic's signature is required when a CPA boundary is within the scope of the project

SAFETY
SAFETY PLEDGE
I ALWAYS PUT SAFETY FIRST.
I LOOK FOR AND ACT TO RESOLVE UNSAFE SITUATIONS.
I HELP AND ENCOURAGE OTHERS TO ACT SAFELY.

REFERENCE DRAWINGS:

385160 - - - - OPERATING MAP

PSRS• 31824

NO.	DATE	DESCRIPTION	GM/SPEC	DWN	CHKD	SUPV	APVD BY
- -							
- -							
		ISSUED FOR CONSTRUCTION	41989125	CXM7	CDB6	KSP4	

REVISIONS

APPROVED BY	
GM	41989125
SUPV	K. KENT
DSGN	C. CHESNUTT
DWN	C. CHESNUTT
CHKD	C. BRISTOW
OK	
DATE	4-8-14
SCALES	

PIPING - COVER SHEET
L-1614-01 & L1614-02
MP 2.22 - 2.26
N. DAVIS RD. @ W. TURNER RD.
PROVIDE METALIC PATH FOR C.P.
PACIFIC GAS AND ELECTRIC COMPANY
SAN FRANCISCO, CALIFORNIA

MICROFILM	
BILL OF MATL SHEET 2	
DWG LIST	
SUPSDS	
SUPSD BY	
SHEET NO. 1 OF 2	SHEETS
41989125	1

41989125.dgn 4/8/2014 9:15:43 AM

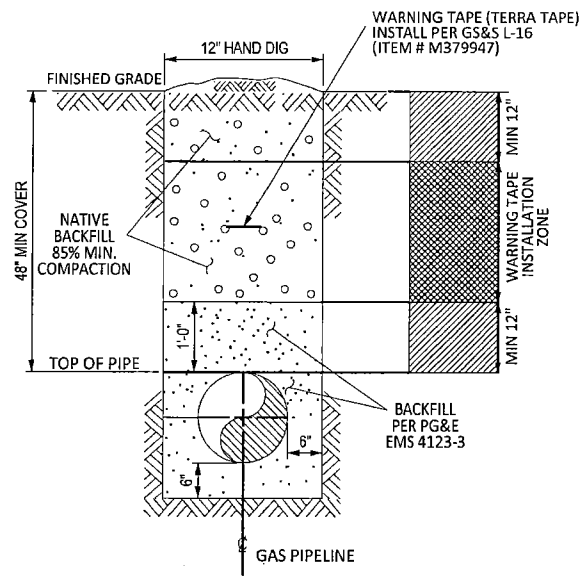

DETAIL TYP (~) TRENCH NON-PAVED AREA NATIVE BACKFILL
SCALE: NO SCALE

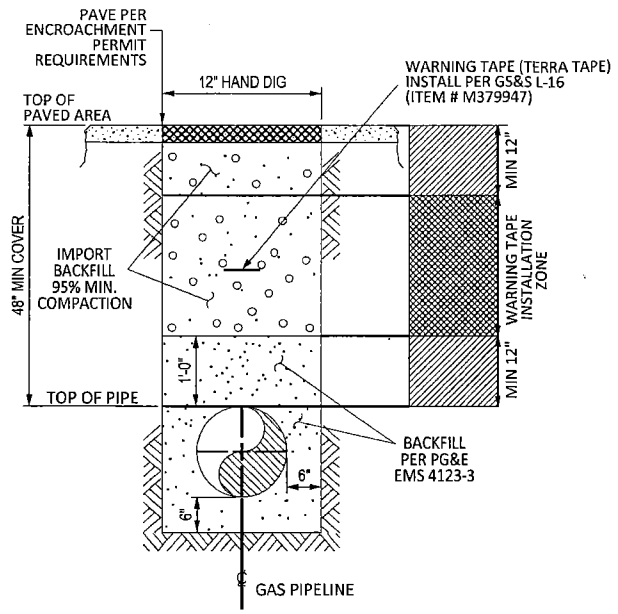

DETAIL TYP (~) TRENCH PAVED AREA IMPORT BACKFILL
SCALE: NO SCALE

PG&E CODE	ITEM NO.	QNTY.	ORDER NO. 41989125 DESCRIPTION	CATALOG OR DWG REF.
	1	1	PEDESTAL BOX 18"X18"X6"	SPECIAL ORDER
M360305	2	120'	CONDUIT, 1" SCHEDULE 80 PVC	GAS STD 0-11.1
M294991	3	1	#10 AWG WIRE, 500' COIL	GAS STD 0-10
	4	100'	#8 AWG WIRE / FARWEST CORROSION CONTROL	SPECIAL ORDER
M562324	5	9	ROYSTON 4" X 4" HANDY CAPS	GAS STD E-27
M130850	6	2	ROYSTON ROYBOUND LIQUID ADHESIVE	GAS STD E-27
	7	1	4" X 4" POST FOR PEDESTAL BOX.	

THERMITE WELDING AND PIN BRAZING ARE THE ONLY APPROVED METHODS FOR CONNECTING WIRES TO STEEL PIPE, GAS STD. 0-10.

APPLY ROYSTEN HANDY CAPS AND USE LIQUID ADHESIVE TO ADHERE PER GAS STD. E-27.

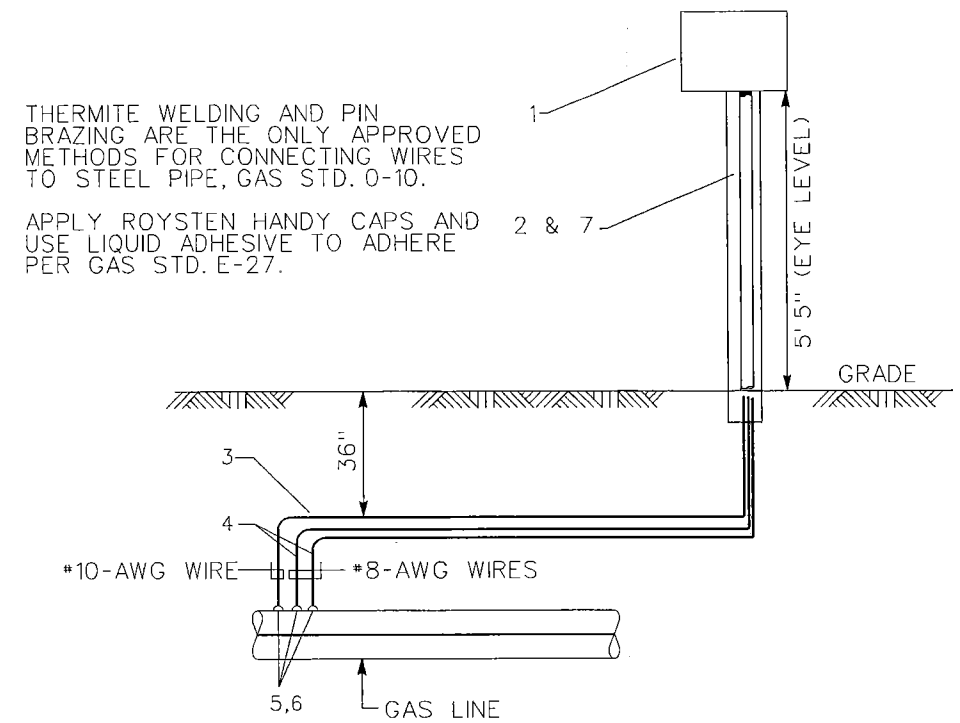

ELEVATION (A) (~)
NTS

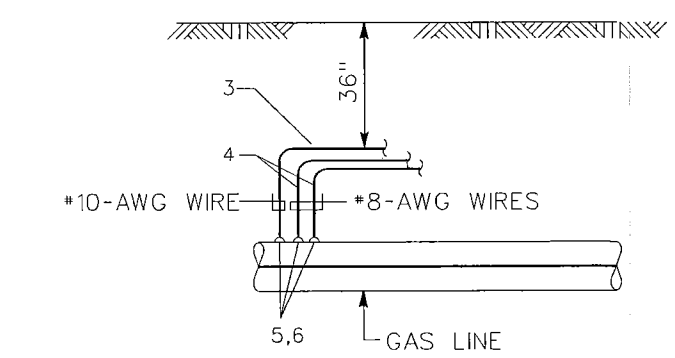

DETAIL (1) (~)
NTS

BTU AREA # X-01
CP AREA # F-05
WALL MAP 2869
PLAT C3
SAN JOAQUIN COUNTY

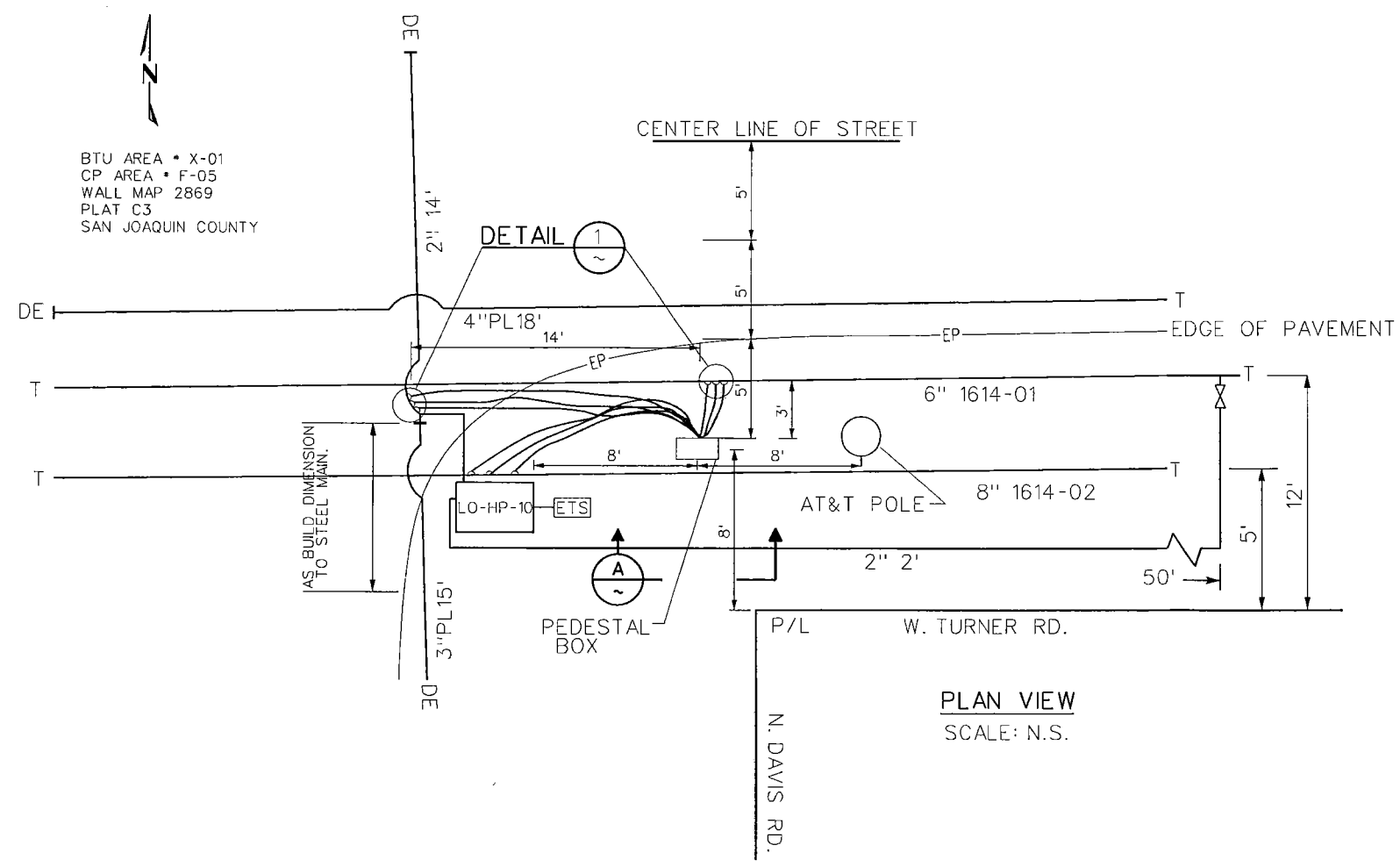

PLAN VIEW
SCALE: N.S.

LEGEND:

- PROPOSED GAS LINE
- EXISTING GAS LINE
- ELECTRIC LINE
- TELEPHONE LINE
- TIE-IN WELD
- EXISTING TOWER
- ELECTRIC VAULT
- GAS LINE MARKER
- GAS VALVE
- WATER VALVE
- TREE
- TEL VAULT
- STORM DRAIN
- SEWER MANHOLE
- CITY/COUNTY MON
- AS NOTED
- FENCE
- ETS
- CABLE TV BOX
- COMM VAULT
- EDGE OF PAVEMENT
- FACE OF CURB
- STORM LINE
- SEWER LINE
- GAS SERVICE LINE
- WATER LINE

STA.
JOB NO.
B/M ITEM NO.
DESIGN CRITERIA
LOCATION CLASS
DESIGN FACTOR
FDP PSIG % SMYS
MAOP PSIG % SMYS
STRENGTH TEST PRESSURE
MAX. PSIG % SMYS
MIN. PSIG % SMYS
PSIG=90% SMYS
TEST MEDIUM
PIPE SPEC
O.D.
W.T.
WELD INSPECTION (GAS STD.D-40)*
☐RADIOGRAPHIC:
☐20% MIN. (% OF EACH WELDER'S DAILY WORK)
☐100%
*VISUALLY INSPECT 100% OF ALL WELDS THAT ARE NOT RADIOGRAPHICALLY INSPECTED. (THIS REQUIREMENT APPLIES EVEN IF NO RADIOGRAPHIC INSPECTION IS REQUIRED.)

STA.
JOB NO.
B/M ITEM NO.
DESIGN CRITERIA
LOCATION CLASS
DESIGN FACTOR
FDP PSIG % SMYS
MAOP PSIG % SMYS
STRENGTH TEST PRESSURE
MAX. PSIG % SMYS
MIN. PSIG % SMYS
PSIG=90% SMYS
TEST MEDIUM
PIPE SPEC
O.D.
W.T.
WELD INSPECTION (GAS STD.D-40)*
☐RADIOGRAPHIC:
☐20% MIN. (% OF EACH WELDER'S DAILY WORK)
☐100%
*VISUALLY INSPECT 100% OF ALL WELDS THAT ARE NOT RADIOGRAPHICALLY INSPECTED. (THIS REQUIREMENT APPLIES EVEN IF NO RADIOGRAPHIC INSPECTION IS REQUIRED.)

SAFETY

SAFETY PLEDGE

I ALWAYS PUT SAFETY FIRST.
I LOOK FOR AND ACT TO RESOLVE UNSAFE SITUATIONS.
I HELP AND ENCOURAGE OTHERS TO ACT SAFELY.

PSRS# 31824

UNDERGROUND SERVICE ALERT USA CALL BEFORE YOU DIG. CALL 811

NO.	DATE	DESCRIPTION	GM/SPEC	DWN	CHKD	SUPV	APVD BY
- -							
- -		ISSUED FOR CONSTRUCTION	41989125	CXM7	CDB6	KSP4	

REVISIONS

APPROVED BY	
GM	41989125
SUPV	K. KENT
DSGN	C. CHESNUTT
DWN	C. CHESNUTT
CHKD	C. BRISTOW
OK	
DATE	5-19-14
SCALES	

PIPING - PLAN
L-1614-01 & L1614-02
MP 2.22 - 2.26
N. DAVIS RD. @ W. TURNER RD.
PROVIDE METALIC PATH FOR C.P.
PACIFIC GAS AND ELECTRIC COMPANY
SAN FRANCISCO, CALIFORNIA

MICROFILM
BILL OF MATL SHEET 2
DWG LIST
SUPSDS
SUPSD BY
SHEET NO. 2 OF 2 SHEETS
41989125 1

41989125.dgn 5/22/2014 2:33:31 PM

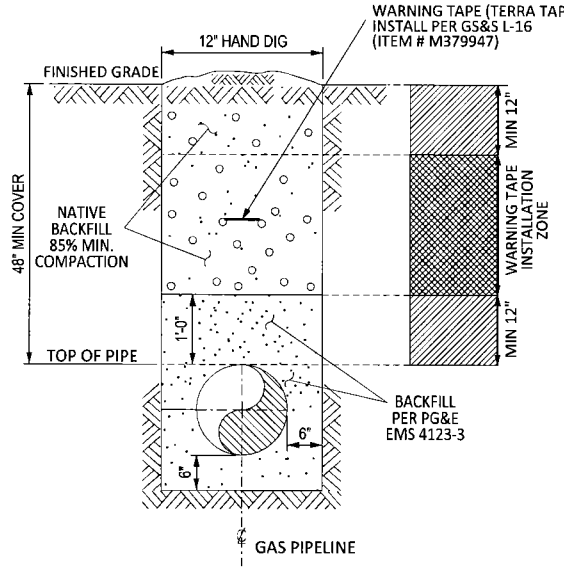

DETAIL TYP (~) TRENCH NON-PAVED AREA / NATIVE BACKFILL
SCALE: NO SCALE

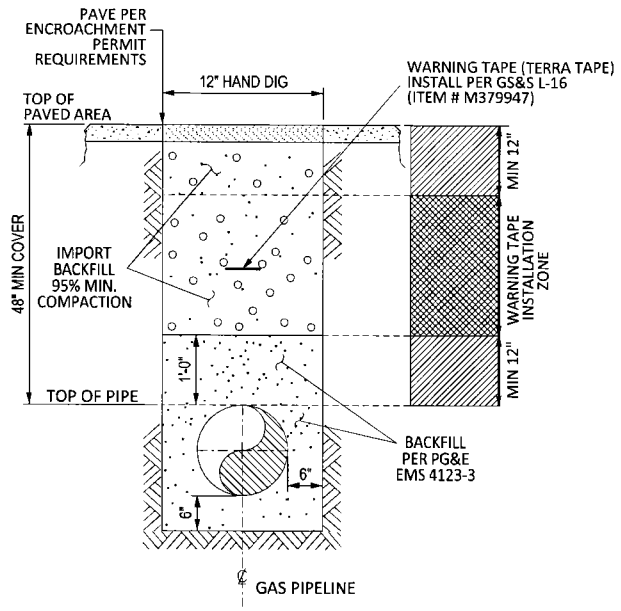

DETAIL TYP (~) TRENCH PAVED AREA / IMPORT BACKFILL
SCALE: NO SCALE

PG&E CODE	ITEM NO.	QNTY.	ORDER NO. 41989125 DESCRIPTION	CATALOG OR DWG REF.
	1	1	PEDESTAL BOX 18"X18"X6"	SPECIAL ORDER
M360305	2	120'	CONDUIT, 1" SCHEDULE 80 PVC	GAS STD 0-11.1
M294991	3	1	#10 AWG WIRE, 500' COIL	GAS STD 0-10
	4	100'	#8 AWG WIRE / FARWEST CORROSION CONTROL	SPECIAL ORDER
M562324	5	9	ROYSTON 4" X 4" HANDY CAPS	GAS STD E-27
M130850	6	2	ROYSTON ROYBOUND LIQUID ADHESIVE	GAS STD E-27
	7	1	4" X 4" POST FOR PEDESTAL BOX.	

THERMITE WELDING AND PIN BRAZING ARE THE ONLY APPROVED METHODS FOR CONNECTING WIRES TO STEEL PIPE, GAS STD. 0-10.

APPLY ROYSTEN HANDY CAPS AND USE LIQUID ADHESIVE TO ADHERE PER GAS STD. E-27.

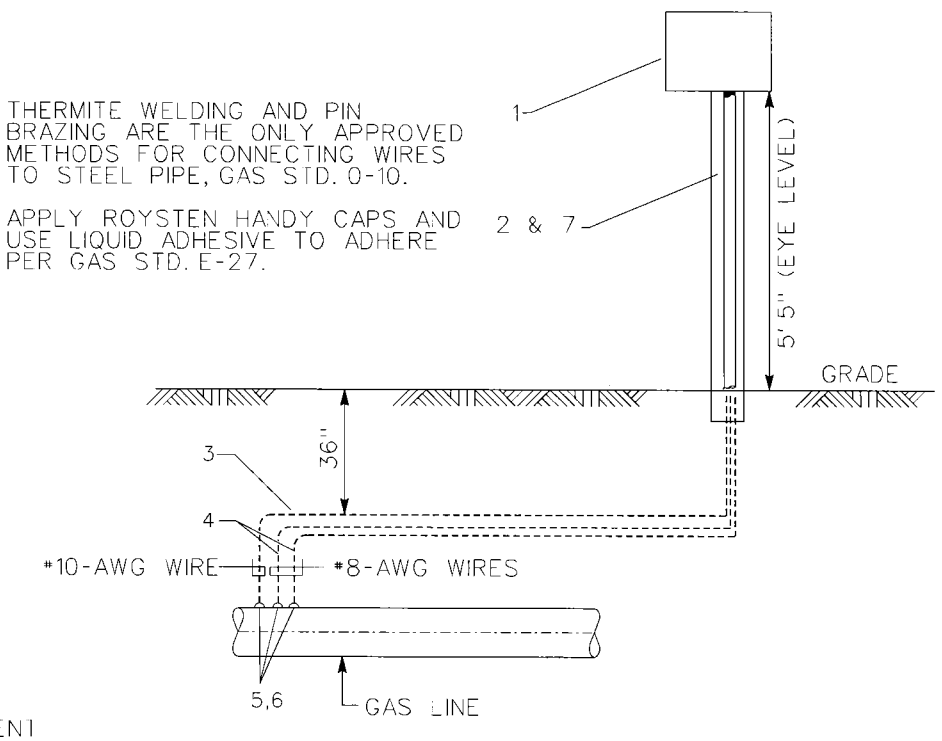

ELEVATION (A ~)
NTS

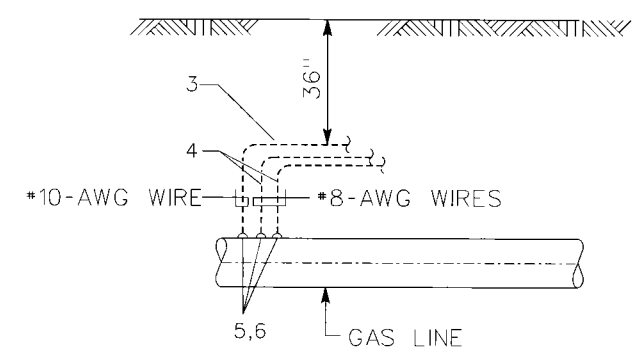

DETAIL (1 ~)
NTS

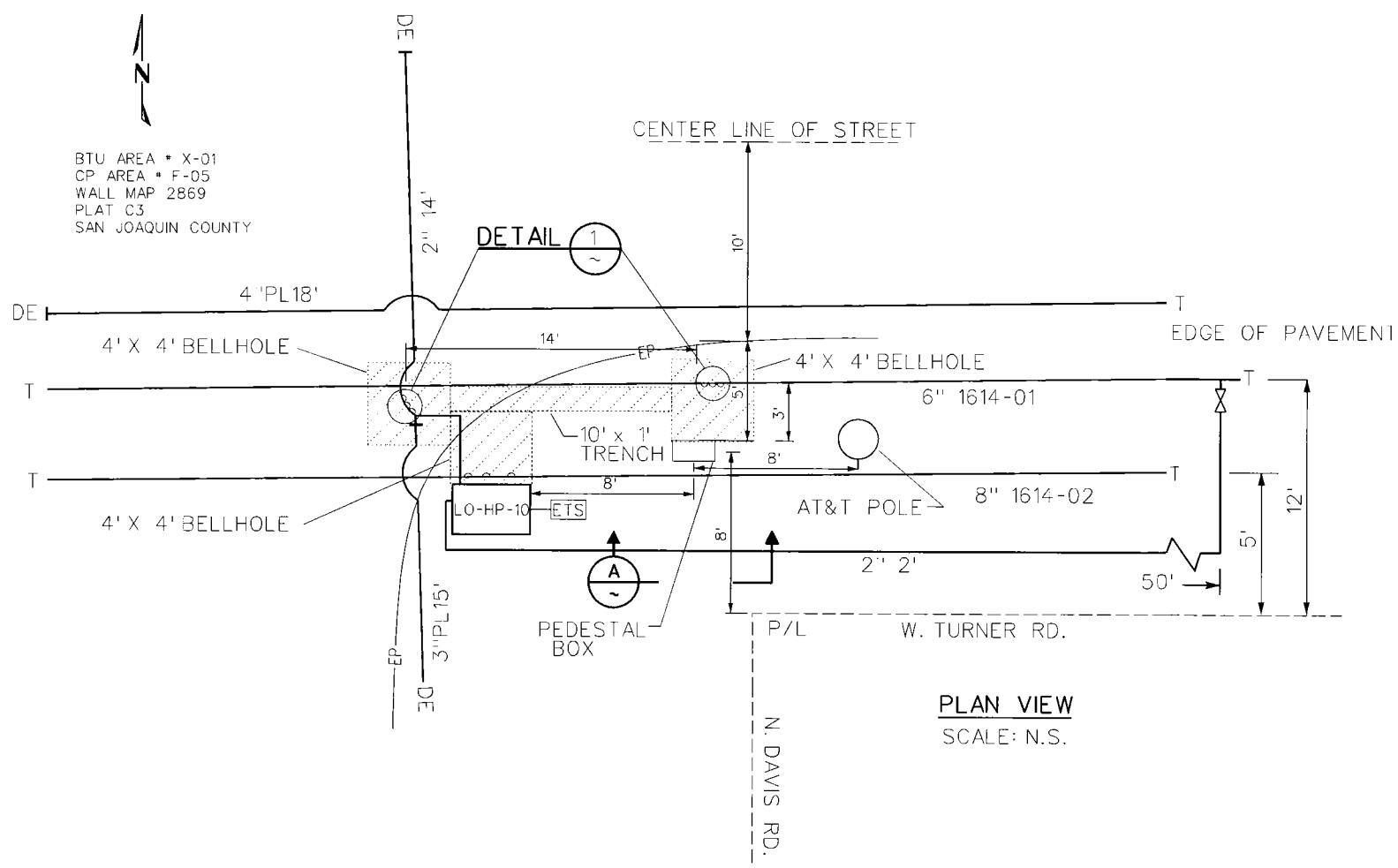

PLAN VIEW
SCALE: N.S.

LEGEND:

- PROPOSED GAS LINE
- EXISTING GAS LINE
- E — ELECTRIC LINE
- T — TELEPHONE LINE
- TIE-IN WELD
- EXISTING TOWER
- ELECTRIC VAULT
- GAS LINE MARKER
- GAS VALVE
- WATER VALVE
- TREE
- TEL VAULT
- STORM DRAIN
- SEWER MANHOLE
- CITY/COUNTY MON
- AS NOTED
- FENCE
- (E) ETS
- CABLE TV BOX
- COMM VAULT
- -EP- EDGE OF PAVEMENT
- -FC- FACE OF CURB
- -SD- STORM LINE
- -SS- SEWER LINE
- -GS- GAS SERVICE LINE
- -W- WATER LINE

STA. _____
JOB NO. _____
B/M ITEM NO. _____
DESIGN CRITERIA
LOCATION CLASS _____
DESIGN FACTOR _____
FDP _____ PSIG _____ % SMYS
MAOP _____ PSIG _____ % SMYS
STRENGTH TEST PRESSURE
MAX. _____ PSIG _____ % SMYS
MIN. _____ PSIG _____ % SMYS
_____ PSIG-90% SMYS
TEST MEDIUM _____
PIPE SPEC _____
O.D. _____
W.T. _____
WELD INSPECTION (GAS STD.D-40)*
☐RADIOGRAPHIC:
☐20% MIN. (% OF EACH WELDER'S DAILY WORK)
☐100%
*VISUALLY INSPECT 100% OF ALL WELDS THAT ARE NOT RADIOGRAPHICALLY INSPECTED. (THIS REQUIREMENT APPLIES EVEN IF NO RADIOGRAPHIC INSPECTION IS REQUIRED.)

STA. _____
JOB NO. _____
B/M ITEM NO. _____
DESIGN CRITERIA
LOCATION CLASS _____
DESIGN FACTOR _____
FDP _____ PSIG _____ % SMYS
MAOP _____ PSIG _____ % SMYS
STRENGTH TEST PRESSURE
MAX _____ PSIG _____ % SMYS
MIN. _____ PSIG _____ % SMYS
_____ PSIG-90% SMYS
TEST MEDIUM _____
PIPE SPEC _____
O.D. _____
W.T. _____
WELD INSPECTION (GAS STD.D-40)*
☐RADIOGRAPHIC:
☐20% MIN. (% OF EACH WELDER'S DAILY WORK)
☐100%
*VISUALLY INSPECT 100% OF ALL WELDS THAT ARE NOT RADIOGRAPHICALLY INSPECTED. (THIS REQUIREMENT APPLIES EVEN IF NO RADIOGRAPHIC INSPECTION IS REQUIRED.)

SAFETY

SAFETY PLEDGE

I ALWAYS PUT SAFETY FIRST.
I LOOK FOR AND ACT TO RESOLVE UNSAFE SITUATIONS.
I HELP AND ENCOURAGE OTHERS TO ACT SAFELY.

PSRS# 31824

CALL 811 BEFORE YOU DIG

NO.	DATE	DESCRIPTION	GM/SPEC	DWN	CHKD	SUPV	APVD BY
- -							
- -							
- -							
- -							
- -							
- -							
- -		ISSUED FOR CONSTRUCTION	41989125	CXM7	CDB6	KSP4	

REVISIONS

APPROVED BY	
GM	41989125
SUPV	K. KENT
DSGN	C. CHESNUTT
DWN	C. CHESNUTT
CHKD	C. BRISTOW
OK	
DATE	6-17-14
SCALES	

ADDITIONAL PERMIT SKETCH
L-1614-01 & L1614-02
MP 2.22 - 2.26
N. DAVIS RD. @ W. TURNER RD.
PROVIDE METALIC PATH FOR C.P.
PACIFIC GAS AND ELECTRIC COMPANY
SAN FRANCISCO, CALIFORNIA

MICROFILM	
BILL OF MATL	SHEET 2
DWG LIST	
SUPSDS	
SUPSD BY	
SHEET NO.	1 OF 1 SHEETS

41989125 | 1

N1808 41989125.dgn 6/17/2014 12:42:25 PM

TRAFFIC CONTROL PLANS

N DAVIS RD & W TURNER RD
LODI, CALIFORNIA

SAN JOAQUIN COUNTY

PM41989125

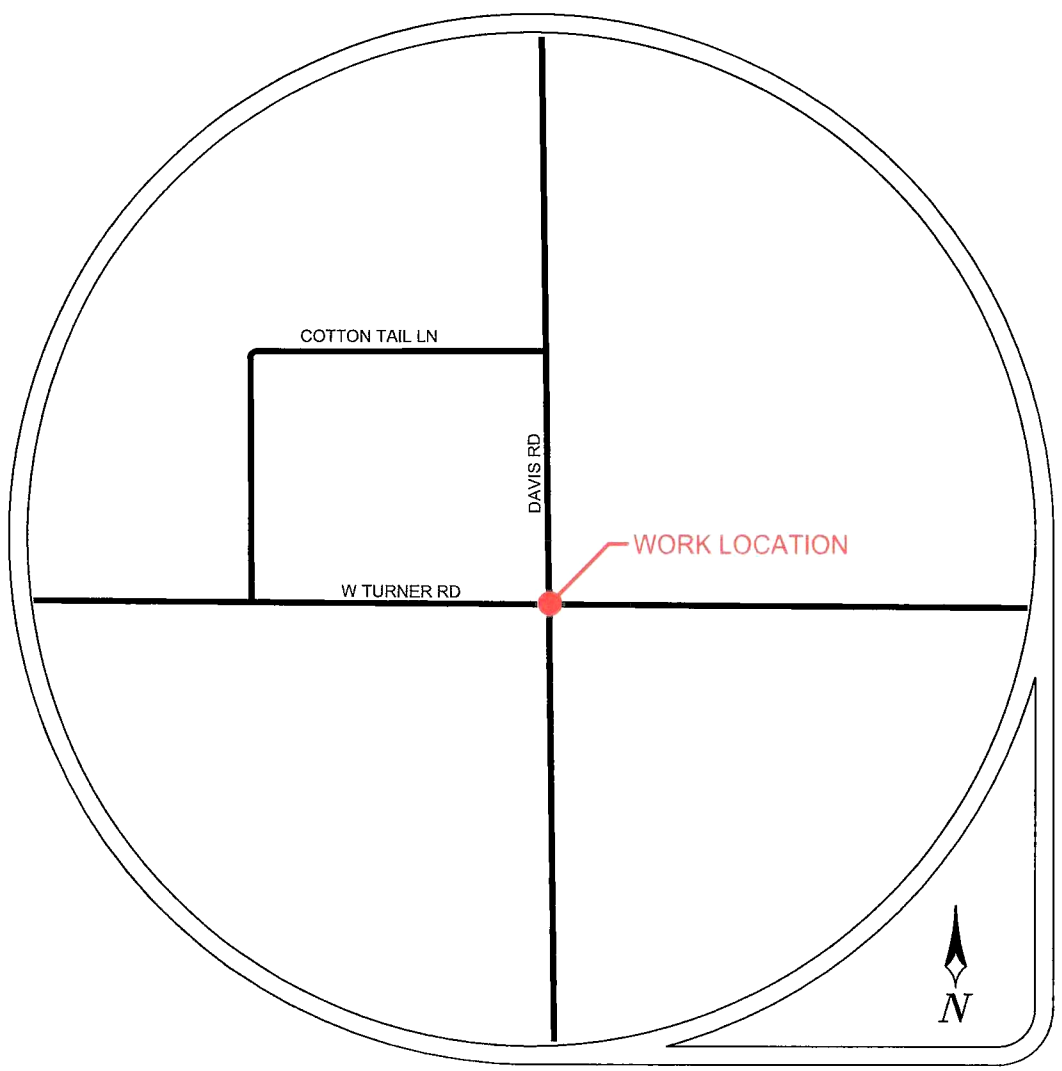

LOCATION MAP

CONTRACTOR

Pacific Gas and Electric Company

CONTACT CANDACE CHESNUTT

PHONE# (925) 244-3178

CONSULTANT

ALMENDARIZ CONSULTING INC

ALMENDARIZ CONSULTING, INC.
1136 SUNCAST LN STE 9
EL DORADO HILLS, CA 95762
(888) 306-1211 OFFICE
(888) 768-7022 FAX
CA C31 LIC #979806

REVISIONS			
REV.	DESCRIPTION	BY	DATE

PROJECT NO. 131081
DRAWN BME
DESIGNED BME
CHECKED MAA

DATE
DECEMBER 4, 2013

SHEET NO 1 OF 3

GENERAL NOTES

1. NOTHING ALLOWED IN THE BUFFER AND TRANSITION AREAS AT ALL TIMES.
2. SIGNS ARE ONLY SHOWING TO THE PUBLIC WHEN IN USE.
3. SIGNS AND CHANNELIZING DEVICES MUST BE RETROREFLECTIVE OR ILLUMINATED DURING NIGHT OPERATIONS.
4. SIGN PANEL SIZES: 36"X36" MIN. ON ROADS <50mph, 48"x48" ON ROADS ≥ 50mph.
5. SIGNS ARE SPACED PER THE CA 2012 MUTCD.
6. CHANNELIZING DEVICES SPACING AND TAPER LENGTHS ARE BASED ON THEIR RESPECTIVE CHARTS. (SEE CHARTS THIS PAGE)
7. NOTIFY THE LOCAL LAW ENFORCEMENT, FIRE, AND AMBULANCE COMPANIES WITHIN 72 HOURS BEFORE CONSTRUCTION BEGINS.
8. CONTRACTOR TO MAKE SURE ALL TRAFFIC CONTROL EQUIPMENT MEETS ALL AGENCY REQUIREMENTS.
9. REMOVE ALL CONFLICTING MARKINGS FOR LONG TERM OPERATIONS (3 DAYS OR LONGER).
10. THE LOCATION OF THE SIGNS AS SHOWN ON THE ILLUSTRATIONS ARE GUIDELINES AND ACTUAL LOCATIONS WILL DEPEND UPON ALIGNMENT, GRADE, LOCATION OF STREET INTERSECTIONS AND 85% TILE/POSTED SPEED LIMITS/OR PRIMA FACIE.
11. WHILE CROSSING INTERSECTIONS DURING MOBILE WORK, WORK MUST FOLLOW THE FLOW OF TRAFFIC AND PROCEED ON A GREEN LIGHT.
12. FULL COMPLIANCE IS REQUIRED WITH THE COUNTY AGENCY.(AFFECTS NOTES #20 THRU 22, BELOW)
13. PEDESTRIAN ACCESS BE MAINTAINED AS PER THE CA 2012 MUTCD STANDARDS AND ADA REQUIREMENTS.
14. C30 SIGNS ARE PERMITTED IN BUFFER AREAS.
15. SIGN SPACING IS PROVIDED IN THE CA 2012 MUTCD EDITION, PART 6. TRAFFIC SPEEDS ARE BASED UPON RADAR MEASUREMENTS OF MOTORISTS. THE MUTCD ALLOWS FOR A "RANGE" IN SIGN PLACEMENT AND WILL BE PROVIDED BY DOT. THE 85% TILE IS USED WHEN AVAILABLE TO PROVIDE A MORE ACCURATE REPRESENTATION OF MOTORISTS SPEEDS.
16. ANY WORK WITHIN 200 FT OF A SIGNALIZED INTERSECTION WILL REQUIRE CONTACT AND COORDINATION WITH COUNTY AGENCY PRIOR TO ANY WORK.
17. QUALITY STANDARD TO MEET REQUIREMENTS OF SECTION 1A-2 OF THE CALIFORNIA MANUAL ON UNIFORM TRAFFIC CONTROL DEVICES.
18. ALL TRAFFIC CONTROL DEVICES INCLUDING: SIGNS, BARRICADES, VERTICAL PANELS, DRUMS, WARNING LIGHTS, ARROWBOARDS, CHANGEABLE MESSAGE SIGNS, CONES AND TUBULAR MARKERS THAT MEET THE REQUIREMENTS OF AMERICAN TRAFFIC SAFETY SERVICES ASSOCIATION (ATSSA). "CA MUTCD 2012" SHALL BE USED ON THIS PROJECT/THIS WORK.
19. THE NCHRP REPORT 476 PROVIDES GUIDELINES FOR DESIGN AND OPERATION OF NIGHTTIME TRAFFIC CONTROL FOR HIGHWAY MAINTENANCE AND CONSTRUCTION. SEE TYPICAL APPLICATIONS NWTA-1 THROUGH NWTA-7. COMPLY WITH ANSI 107-2004 FOR APPAREL. HIGHWAY CONSTRUCTION WORK LIGHTING SHALL BE PER CONSTRUCTION SAFETY ORDER 1523 (CALIFORNIA CODE OF REGULATIONS TITLE 8, DIVISION1, CHAPTER 4, SUBCHAPTER 4, ARTICLE 3, SECTION 1523 - ILLUMINATIONS).
20. SIDEWALKS AT THE CONSTRUCTION LOCATION MAY BE CLOSED WITH ADEQUATE DETOURS. SIDEWALKS MAY ONLY BE CLOSED TO THROUGH TRAFFIC AND SHALL NOT PREVENT LOCAL PEDESTRIANS ACCESS. DETOURS SHALL NOT INCREASE THE PATH OF TRAVEL BY MORE THAN 500 FT. DETOUR ROUTES SHALL BE LIMITED TO EXISTING SIDEWALKS, PRIVATE PROPERTIES (SEE BELOW REQUIREMENTS) AND CROSSINGS AT ROADWAY INTERSECTIONS. TO THE MAXIMUM EXTENT FEASIBLE, THE ALTERNATE CIRCULATION PATH SHALL BE PROVIDED ON THE SAME SIDE OF THE STREET AS THE DISRUPTED ROUTE. WHERE IT IS FEASIBLE TO PROVIDE A SAME-SIDE ALTERNATE CIRCULATION PATH AND PEDESTRIANS WILL BE DETOURED, SECTION 6D.02 OF THE CA 2012 MUTCD SPECIFIES THAT THE ALTERNATE PATH PROVIDE A SIMILAR LEVEL OF ACCESSIBILITY TO THAT OF THE EXISTING DISRUPTED ROUTE . THIS MAY INCLUDE THE INCORPORATION OF ACCESSIBLE PEDESTRIAN SIGNALS (APS), CURB RAMPS, OR OTHER ACCESSIBILITY FEATURES.
21. PEDESTRIANS MAY BE DETOURED ONTO PRIVATE PROPERTY ONLY IF WRITTEN PERMISSION FROM THE PROPERTY OWNER IS OBTAINED ALONG WITH DOCUMENTATION INDICATING THAT THE COUNTY WOULD NOT BE LIABLE (HOLD HARMLESS) IN THE EVENT OF AN ACCIDENT.
22. DURING WORK HOURS, AT LEAST ONE WORKER SHALL BE ASSIGNED WITH THE RESPONSIBILITY TO ESCORT ELDERLY, DISABLED OR ANY OTHER PEDESTRIANS IN NEED OF ASSISTANCE THROUGH THE CONSTRUCTION SITE. A WORKER ASSIGNED WITH THIS RESPONSIBILITY MAY ALSO PARTICIPATE IN OTHER CONSTRUCTION ACTIVITIES; HOWEVER, THE ASSIGNED WORKER SHALL BE AWARE OF HIS OR HER RESPONSIBILITIES FOR PROVIDING THIS ASSISTANCE. MEASURES THAT SIMPLY CLOSE THE SIDEWALK, WITH THE EXCEPTION THAT PEDESTRIANS WILL CROSS SOMEWHERE ELSE DOES NOT ADEQUATELY SATISFY PEDESTRIAN ACCESS. PEDESTRIANS SHOULD NEVER BE DIRECTED/ EXPECTED TO CROSS A MULTI-LANE ROADWAY AT ANY LOCATION OTHER THAN AT A SIGNAL (OR ALL-WAY STOP). ACCOMMODATIONS SHOULD BE MADE ON THE SAME SIDE OF ROADWAY AS WORK.

TABLES CHART - MUTCD

Posted Speed	Taper (L) Formula	Buffer Space	Minimum Taper Lengths									Maximum *Cone Spacing			Sign Spacing
			10' Offset			11' Offset			12' Offset						
			L Merge	1/2 L Shift	1/3 L Shoulder	L Merge	1/2 L Shift	1/3 L Shoulder	L Merge	1/2 L Shift	1/3 L Shoulder	@ Taper	@ Tangent	@ Conflict	
25	$L = \frac{WS^2}{60}$	155'	104'	52'	35'	115'	57'	38'	125'	63'	42'	25'	50'	12'	100' - 200'
30		200'	150'	75'	50'	165'	83'	55'	180'	90'	60'	30'	60'	15'	120' - 240'
35		250'	204'	102'	68'	225'	112'	75'	245'	123'	82'	35'	70'	17'	140' - 280'
40		305'	267'	133'	89'	293'	147'	98'	320'	160'	107'	40'	80'	20'	160' - 320'
45	L = WS	360'	450'	225'	150'	495'	248'	165'	540'	270'	180'	45'	90'	22'	360' - 540'
50		425'	500'	250'	167'	550'	275'	183'	600'	300'	200'	50'	100'	25'	400' - 600'
55		495'	550'	275'	183'	605'	303'	202'	660'	330'	220'	55'	110'	27'	440' - 660'
60		570'	600'	300'	200'	660'	330'	220'	720'	360'	240'	60'	120'	30'	480' - 720'
65		645'	650'	325'	217'	715'	358'	238'	780'	390'	260'	65'	130'	32'	520' - 780'
70		730'	700'	350'	233'	770'	385'	257'	840'	420'	280'	70'	140'	35'	560' - 840'

Both are based on.
1.) 85th % Tile or if not available, then use Posted Speed Limit (PSL)

L = Taper Length
S = Speed
W = Width (Offset from path of travel

*Cones shown on the templates are illustration purposes only. Exact number of cones required shall be based on cone spacing, taper lengths, actual field conditions, etc..

CA MUTCD 2012 TABLE 6C-1

MEANING OF LETTER CODES ON TYPICAL APPLICATION DIAGRAMS

ROAD TYPE	DISTANCE BETWEEN SIGNS		
	A	B	C
URBAN (LOW SPEED) - 25 MPH OR LESS	100 FEET	100 FEET	100 FEET
URBAN (LOW SPEED) - MORE THAN 25 MPH TO 40 MPH	250 FEET	250 FEET	250 FEET
URBAN (HIGH SPEED) - MORE THAN 40 MPH	350 FEET	350 FEET	350 FEET
RURAL	500 FEET	500 FEET	500 FEET
EXPRESSWAY / FREEWAY	1,000 FEET	1,500 FEET	2,640 FEET

REVISIONS			
REV.	DESCRIPTION	BY	DATE

PROJECT NO. 131081
DRAWN BME
DESIGNED BME
CHECKED MAA

DATE
DECEMBER 4, 2013

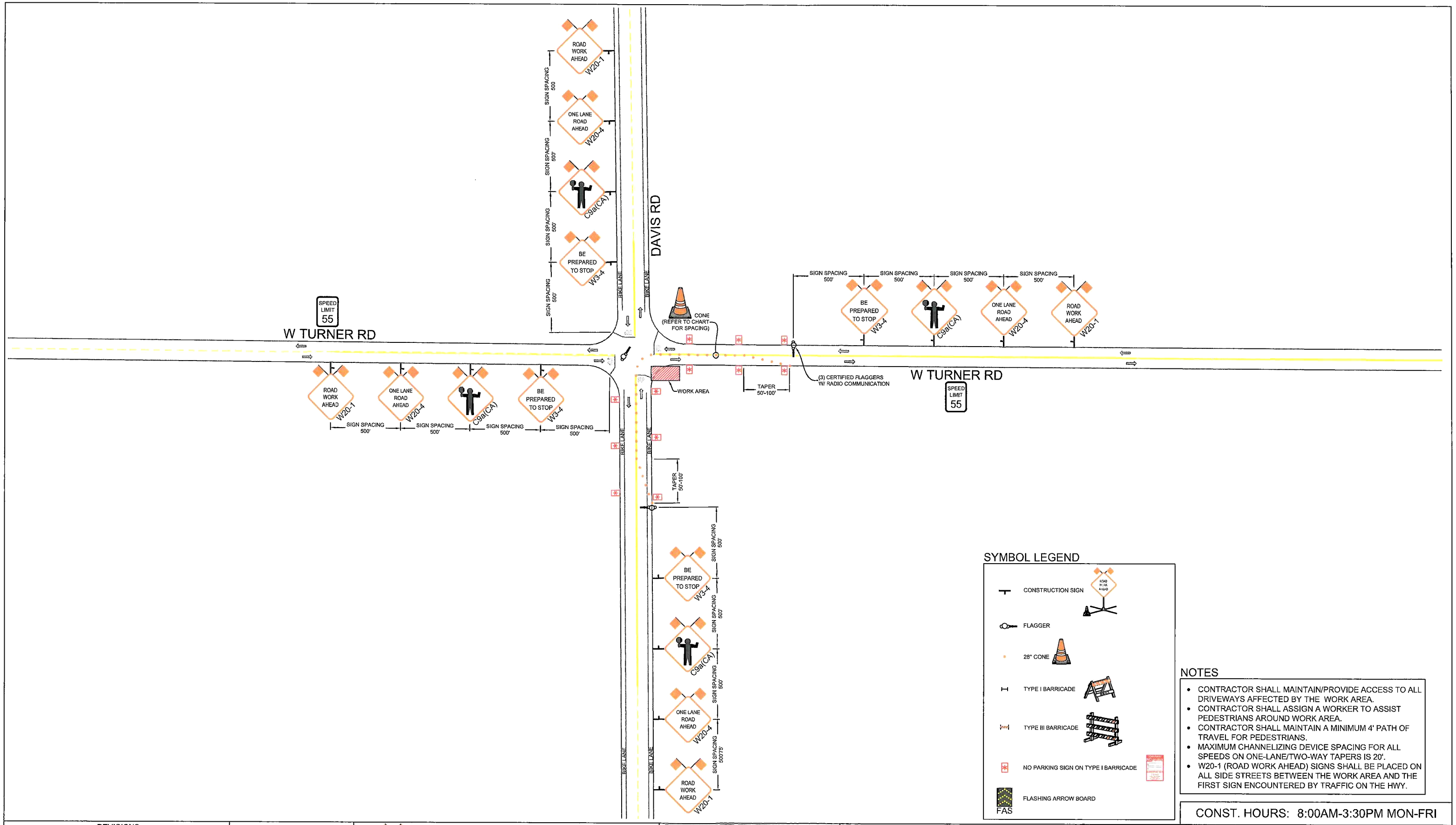

SYMBOL LEGEND

- CONSTRUCTION SIGN
- FLAGGER
- 28" CONE
- TYPE I BARRICADE
- TYPE III BARRICADE
- NO PARKING SIGN ON TYPE I BARRICADE
- FLASHING ARROW BOARD (FAS)

NOTES

- CONTRACTOR SHALL MAINTAIN/PROVIDE ACCESS TO ALL DRIVEWAYS AFFECTED BY THE WORK AREA.
- CONTRACTOR SHALL ASSIGN A WORKER TO ASSIST PEDESTRIANS AROUND WORK AREA.
- CONTRACTOR SHALL MAINTAIN A MINIMUM 4' PATH OF TRAVEL FOR PEDESTRIANS.
- MAXIMUM CHANNELIZING DEVICE SPACING FOR ALL SPEEDS ON ONE-LANE/TWO-WAY TAPERS IS 20'.
- W20-1 (ROAD WORK AHEAD) SIGNS SHALL BE PLACED ON ALL SIDE STREETS BETWEEN THE WORK AREA AND THE FIRST SIGN ENCOUNTERED BY TRAFFIC ON THE HWY.

CONST. HOURS: 8:00AM-3:30PM MON-FRI

REVISIONS

REV.	DESCRIPTION	REV DONE BY	DATE

PM41989125

ROADS < 50 MPH: MINIMUM 36" SIGN PANELS (48" SIGNS MAY BE USED)

ROADS ≥ 50 MPH: MINIMUM 48" SIGN PANELS

ALMENDARIZ CONSULTING
1136 SUNCAST LN STE 9
EL DORADO HILLS, CA 95762
(888) 306-1211 OFFICE (888) 768-7022 FAX
CA C31 LIC #979806

LOCATION N DAVIS RD & W TURNER RD, LODI, CA

Pacific Gas and Electric Company

CONTACT CANDACE CHESNUTT
PHONE* (925) 244-3178

PROJECT NO. 131081
DRAWN BME
DESIGNED BME
CHECKED MAA

DATE
DECEMBER 4, 2013

N

SHEET NO. 3 OF 3