COUNTY OF SAN JOAQUIN

DEPARTMENT OF PUBLIC WORKS
P.O. BOX 1810-1810 E. HAZELTON AVENUE
STOCKTON, CALIFORNIA 95201
(209) 468-3000
FAX # (209) 468-9324

Permit No: **PS-1501266**
Date Issued: 08/26/2015
Exp. Date: 08/25/2016

Project No: PWP110005
APN No: 01307026

DRIVEWAY ENCROACHMENT PERMIT

To: PRUDHEL VINEYARDS PTP
18133 N DEVRIES RD
LODI CA 95242-9208

Location: E/S DEVRIES RD 1000' S/O PELTIER RD

In compliance with your request of **05/18/2015**, and subject to all the terms, conditions and restrictions written below or printed as general or special provisions on any part of this form.
Permission is hereby granted to construct One driveway w/o pipe shown on
Permit Application No. PS-1501266 Quad: NW

Jobsite shall be kept in a safe condition at all times by removing daily any excess dirt or debris which might be a hazard to pedestrian and/or vehicular traffic. Adequate lights, signs and barricades shall be placed and maintained by the Permittee for the protection of the public in accordance with the current Caltrans Standard Specifications.

A(n) ( ) inside diameter per section 62 of the current Caltrans Standard Specifications, ALTERNATIVE PIPE AND PIPE ARCH CULVERTS, shall be installed in roadside drainage ditch for drainage flow maintenance and shall be of sufficient length to clear toe of approach fill or headwalls.

The entire area of driveway approach(es), include flares for turning and /or paved frontage(s), from the edge of roadway pavement to right-of-way (front property) line shall be surfaced with a two inch (2") minimum of asphalt concrete over a (4 inch) minimum of compacted layer of three-quarter inch (3/4") maximum size aggregate base material (road gravel) conforming to Class 2 Aggregate Base specified in Section 26 of the current Caltrans Standard Specification, or with a four inch (4") minimum of portland cement concrete.

If portland cement concrete pavement is installed, expansion joints shall be provided at the edge of pavement and along property line. Surface grades of approach(es) and/or to open ends of pipe. No ponding or puddles on pavement surface shall be allowed.

The field Engineering Division of this office shall receive no less than forty-eight(48) hours notice prior to beginning of any work within the County right-of-way. After completion of the work permitted herein, all debris, lumber, barricades or any excess material shall be removed and the jobsite left in a neat workmanlike condition. The Permittee shall fill out and mail notice of completion provided by Grantor.

Driveway(s) shall be complete prior to occupancy of the residence, but not to exceed expiration date.

Mike Selling, Deputy Director
Department of Public Works

By _____
Permit section

FORMS: SS/WW,R-29

ENCROACHMENT PERMIT GENERAL PROVISIONS

13-1

1. This permit is issued under and subject to all laws and ordinances of agencies governing the encroachment herein permitted. See the following references:
   STREETS AND HIGHWAYS CODE
   1. Division 1, Chapter 3.
   2. Division 2, Chapter 2, Section 942
   3. Division 2, Chapter 4, Section 1126
   4. Division 2, Chapter 5.5 and Chapter 6

   SAN JOAQUIN COUNTY ORDINANCES NUMBERED: 324, 441, 648, 662, 672, 695, 700, 860, 892, 3359, and 3675.

2. It is understood and agreed by the Permittee that the performance of any work under this permit shall constitute an acceptance of all the provisions contained herein and failure on the Permittee's part to comply with any provision will be cause for revocation of this permit. Except as otherwise provided for public agencies and franchise holders, this permit is revocable on five days notice.

3. All work shall be done subject to the supervision of and the satisfaction of the grantor. The Permittee shall at all times during the progress of the work keep the County Highway in as neat and clean condition as is possible and upon completion of the work authorized herein, shall leave the County Highway in a thoroughly neat, clean and usable condition.

4. The Permittee also agrees by the acceptance of this permit to properly maintain any encroachment structure placed by the Permittee on any part of the County Highway and to immediately repair any damage to any portion of the highway, which occurs as a result of the maintenance of the said encroachment structure, until such time as the Permittee may be relieved of the responsibility for such maintenance by the County of San Joaquin.

5. The Permittee also agrees by the acceptance of this permit to make, at its own expense, such repairs as may be deemed necessary by the County Department of Public Works.

6. It is further agreed by the Permittee that whenever construction, reconstruction or maintenance work upon the highway is necessary, the installation provided for herein shall, upon request of the County Department of Public Works, be immediately moved or removed by and at the sole expense of the Permittee.

7. No material used for fill or backfill in the construction of the encroachment shall be borrowed or taken from within the County right of way.

8. All work shall be planned and carried out with as little inconvenience as possible to the traveling public. No material shall be stacked within eight feet (8') of the edge of the pavement or traveled way unless otherwise provided herein. Adequate provision shall be made for the protection of the traveling public. Traffic control standards shall be utilized including barricades; approved signs and lights; and flagmen, as required by the particular work in progress.

9. The Permittee, by the acceptance of this permit, shall assume full responsibility for all liability for personal injury or damage to property which may arise out of the work herein permitted or which may arise out of the failure of the part of the Permittee to properly perform the work provided under this permit. In the event any claim of such liability is made against the County of San Joaquin or any department, official or employee thereof, the Permittee shall defend, indemnify, and hold each of them harmless for such claim.

10. All backfill material is to be moistened as necessary and thoroughly compacted with mechanical means. If required by the County Director of Public Works, such backfill shall consist of gravel or crushed rock. The Permittee shall maintain the surface over structures placed hereunder as may be necessary to insure the return of the roadway to a completely stable condition and until relieved of such responsibility by the County Department of Public Works. Wherever a gravel, crushed rock or asphalt surface is removed or damaged in the course of work related to the permitted encroachment, such material shall either be separately stored and replaced in the roadway as nearly as possible in its original state or shall be replaced in kind, and the roadway shall be left in at least as good a condition as it was before the commencement of operations of placing the encroachment structure.

11. Whenever it becomes necessary to secure permission from abutting property owners for the proposed work, such authority must be secured by the Permittee prior to starting work.

12. The current and future safety and convenience of the traveling public shall be given every consideration in the location and methods of construction utilized.

13. The Permittee is responsible for the preservation of survey monuments within the work herein permitted. If any are disturbed, the Permittee is required to tie out each location and re-establish them after completion of work, using a licensed land surveyor. A corner record must be filed in accordance with state law for any re-set monuments.

COUNTY OF SAN JOAQUIN
DEPARTMENT OF PULIC WORKS

Date: 8-26-15

Received By: TC

CR#: 54196

DRIVEWAYS AND PAVED FRONTAGES PERMIT APPLICATION

APPLICANT	
Name:	Cindy Prudel
Address:	21530 W. DeVries Rd
City, State, Zip Code:	Lodi, Ca. 95242
Area Code - Telephone Number:	209 993 0014

SITE INFORMATION:	
Parcel Owner's Name:	Prudel Vineyards
Site Address:	21530 W. DeVries Rd
City, State, Zip Code:	Lodi, Ca 95242
Area Code - Telephone Number:	209 993 0014

CONTRACTOR ?	
Name:	
Address:	
City, State, Zip Code:	
Area Code - Telephone Number:	

OFFICE USE ONLY			
JOB #:	11005	ISSUE DATE:	
APN	013070 26	FEE DUE:	
EXP. DATE:		DRIVEWAYS:	
STREET:			*
AREA:	QUAD		*
TYPE:			*
FORMS:			
NOTES:			

DRIVEWAY		
TYPE:	QUANTITY	WIDTHS
AGRICULTURE:		@FRONTAGE
COMMERCIAL:		
INDUSTRIAL:		@ R/W
RESIDENCE:		

PAVED FRONTAGE				
LENGTH:	Ft.	X	WIDTH:	Ft.

The undersigned hereby applies for permission to excavate, construct and/or otherwise encroach on County Highway Right-of-Way on the E side of DeVries approximately 1000 feet/mile S Peltier, by installing

Work will commence on or about _____ for approximately _____ days.

SKETCH (Separate sheet may be submitted)

Will this project be self-installed? _____YES _____NO Contractor's License _____

THE APPLICANT HEREBY CERTIFIES:

1. That he/she has read all the provisions of this application, and that the description included in this application are correct to the best of his/her knowledge; and

2. That he/she is the owner of the respective property, or is qualified to represent the owner; and

3. That he/she will assume full responsibility for all liability for persona; injury or damage to property which may arise out of the work described above, or which may arise out of his/her failure to do the work provided herein; and

4. That in the event any claim of such liability is made against the County of San Joaquin or any department, official or employee thereof, he shall defend, indemnify and hold them and each of them harmless for such claim; and

5. That work shall be performed by the applicant and/or any representative of the application in the County Right-of-Way at the above indicated site with a valid San Joaquin County Encroachment Permit; and

6. That if permission is granted as requested, he agrees to do the work described in accordance with all terms, condition and restriction of this and any attached sheet, included as general or special III provisions.

[signature] Signature of Applicant Title — 5/28/15 Date

>>>FIELD INSPECTION COMMENTS<<<<<<<<<<<<<<<<<<<<<<<<<<<<<<<<<<<<<<<<<<<

EXISTING CONDITIONS

1. DRIVEWAY: None ☐ Dirt ☐ Gravel ☑ Aggregate Base ☐ Paved (poor) ☐ Paved (good) ☐
2. SLOPING: Away from Pavement ☐ Towards Pavement ☐ Flat ☑
3. PIPES: None ☑ Existing – Type ____________
   Other pipes in neighborhood: Yes ☐ No ☐ Approaches ☐ Cross Drain ☐ Size ________
4. HEADWALL: Yes ☐ No ☑
5. ASPHALT CONCRETE DIKE: Yes ☐ No ☑
6. BARRIERS: along Right-of-Way ____________
7. DITCH: Yes ☐ No ☑ If Yes: V Style ☐ 2 Point ☐ Other ☐ Width ________ Depth ________

>>>PERMITS REQUIREMENTS<<<<<<<<<<<<<<<<<<<<<<<<<<<<<<<<<<<<<<<<<<<

1. DRIVEWAY: SFR ☑ Commercial ☐ Agriculture ☐ Industrial ☐

   Paved with 2 "Min Depth A.C. over 4 "Min Depth ¾" A.B. over

Notes: ____________

2. PIPES: Length of Pipe Required N/A Ft. and Diameter of Pipe N/A inch(es)

   To be connected to any adjacent driveway pipe Yes ☐ No ☐
   Drainage Inlet Required Yes ☐ No ☐
   Total Length: ________ (with proposed) Total Number of Storm Drain Inlets: ________

Notes: ____________

3. HEADWALL: Yes ☐ No ☑

4. PAVED FRONTAGE: Paved with ________ "Min Depth A.C. over ________ " Min Depth ¾" A.B.
   Measuring ________ Feet in length and ________ Feet in width

>>>FEES<<<<<<<<<<<<<<<<<<<<<<<<<<<<<<<<<<<<<<<<<<<

Driveway Encroachment Permit base fee ________ $135.00

Field Inspection

☒ Driveway w/ or w/o pipe ________ $121.00
☐ Driveway w/box Culvert ________ $181.00
☐ Paved Frontage ________ $116.00 + 0.53/ft.
☐ Curb, Gutter, Sidewalk ________ $121.00 + 1.16/ft.

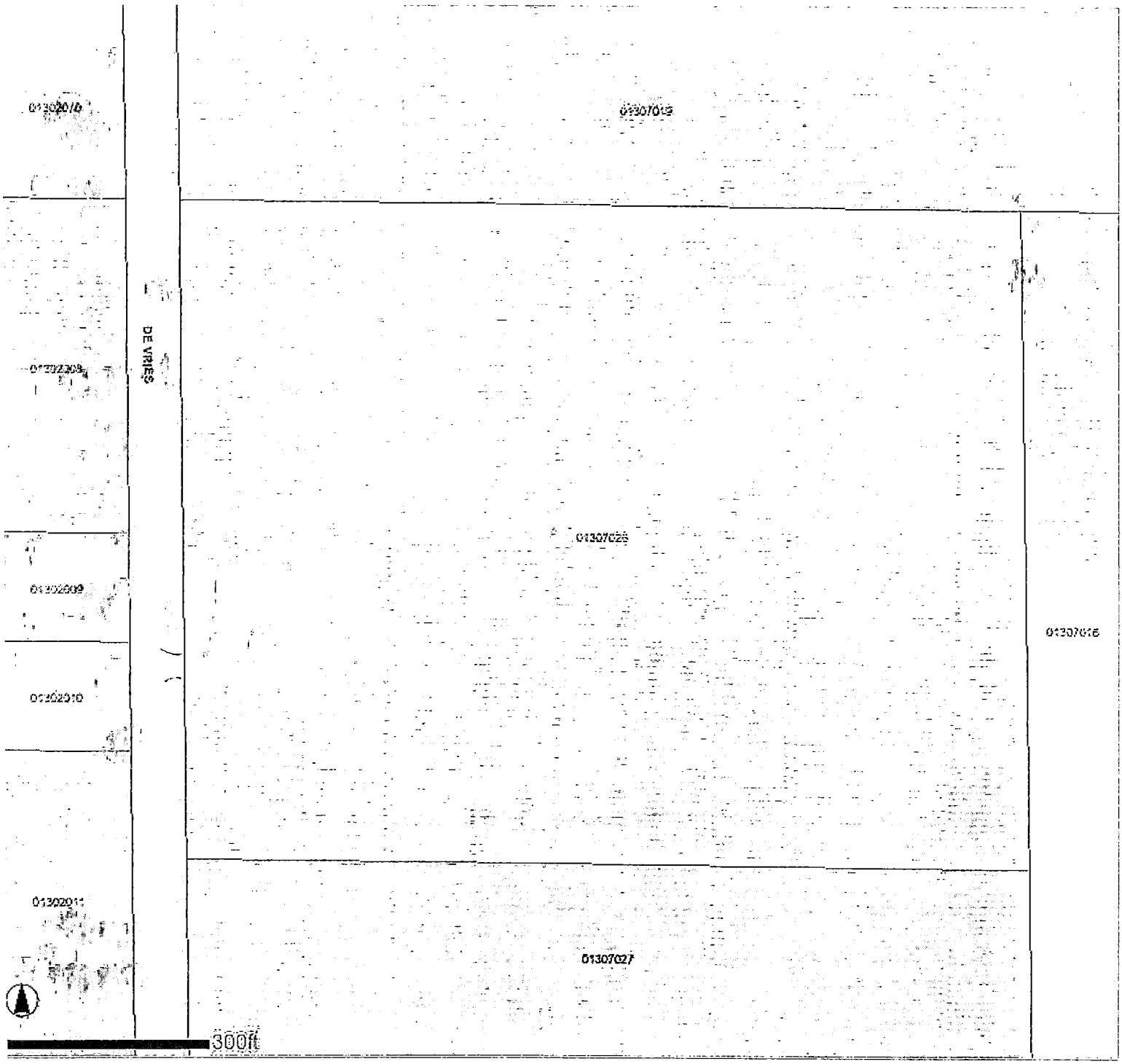
01307029
DE VRIES
01307028
01307016
01307027
300ft

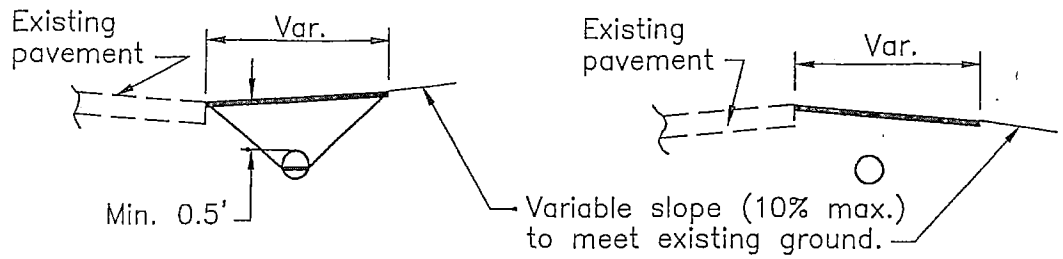

SECTION A–A

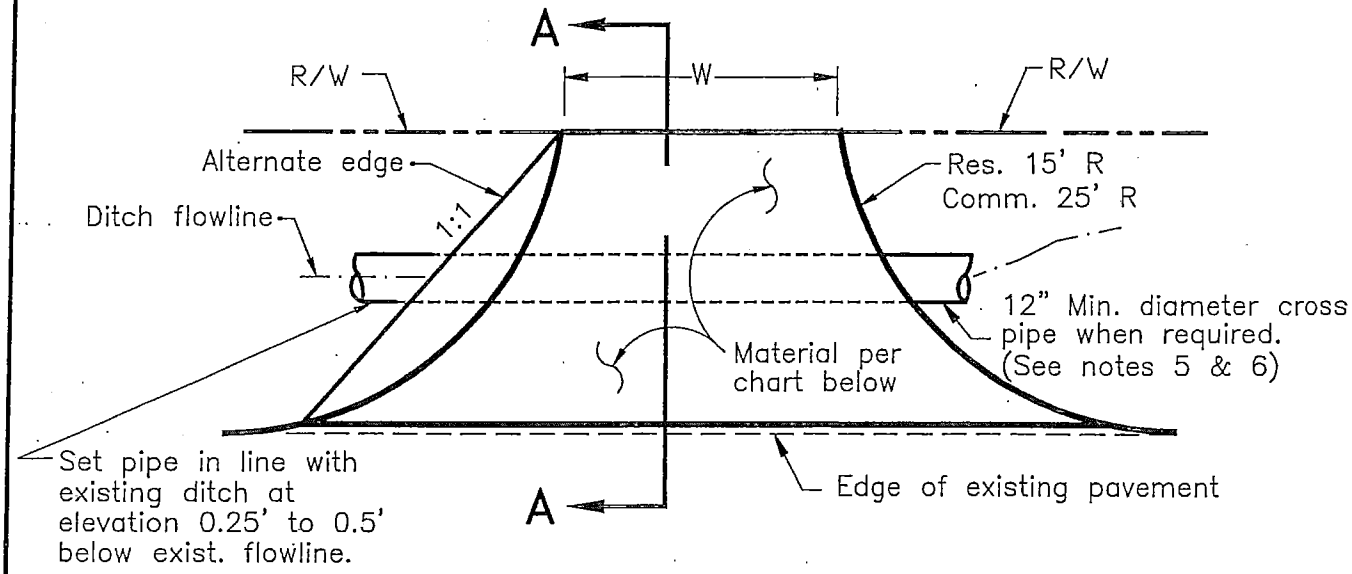

RURAL DRIVEWAY

TYPE	W (Min.)	W (Max.)	STRUCTURAL SECTION (Min.) AC/AB	(Min.) PCC
RURAL OR TEMP RESIDENTIAL	12'	25'	$2"_{AC}/4"_{AB}$	4"
AG, TEMP COMMERCIAL, TEMP INDUSTRIAL	15'	40'	$2"_{AC}/6"_{AB}$	6"

NOTES:

1. FLOWLINE OF PIPE SHALL BE A MIN. OF 3" BELOW DITCH FLOWLINE AND A MAX. OF 1/2 DIAMETER OF PIPE, BELOW DITCH FLOWLINE.
2. At an intersection, no driveway shall be placed within 30' of the point of intersection of the master planned R/W lines.
3. Driveways shall be at right angles to the street.
4. Circle driveways are to be no closer than 75' between centers (residential) or 80' between centers (commercial).
5. When cross pipe is used, it shall extend a minimum of 2' past the toe of fill slopes of the driveway, all fill shall be compacted to 95% relative compaction. Maximum fill slope 2:1.
6. Pipes shall be Reinforced Concrete, or 0.079" Galvanized Corrugated Steel pipe, the size varies according to the hydraulic requirement.

No.	Revised	By
1	Feb. 1996	PD

Drawn by JLD

Checked by

Scale NONE

DRIVEWAYS RURAL, AG, & TEMP

COUNTY OF SAN JOAQUIN
DEPARTMENT OF PUBLIC WORKS

Approved by Henry M. Ukuta
Director of Public Works

Date SEPT. 1991

Drawing No. R - 17