CONSTRUCTION PROJECTS

STATEN ISLAND ROAD; PIPE CROSSING LEVEE REPAIR

THREE FAILING SITES WILL BE REPAIRED BY EXTENDING THE EXISTING PIPES
BY 10' AND INSTALLING A SHEET PILE WALL TO RETAIN THE LEVEE SECTION
THE ROADWAY WILL BE REPAIRED FOR A 20' SECTION FULL WIDTH AT MILE 1.82.
THE SHOULDERS AT ALL THREE SITES WILL BE PLACED THE FULL LENGTH OF THE REPAIR

0 3000' 4500' 6000'

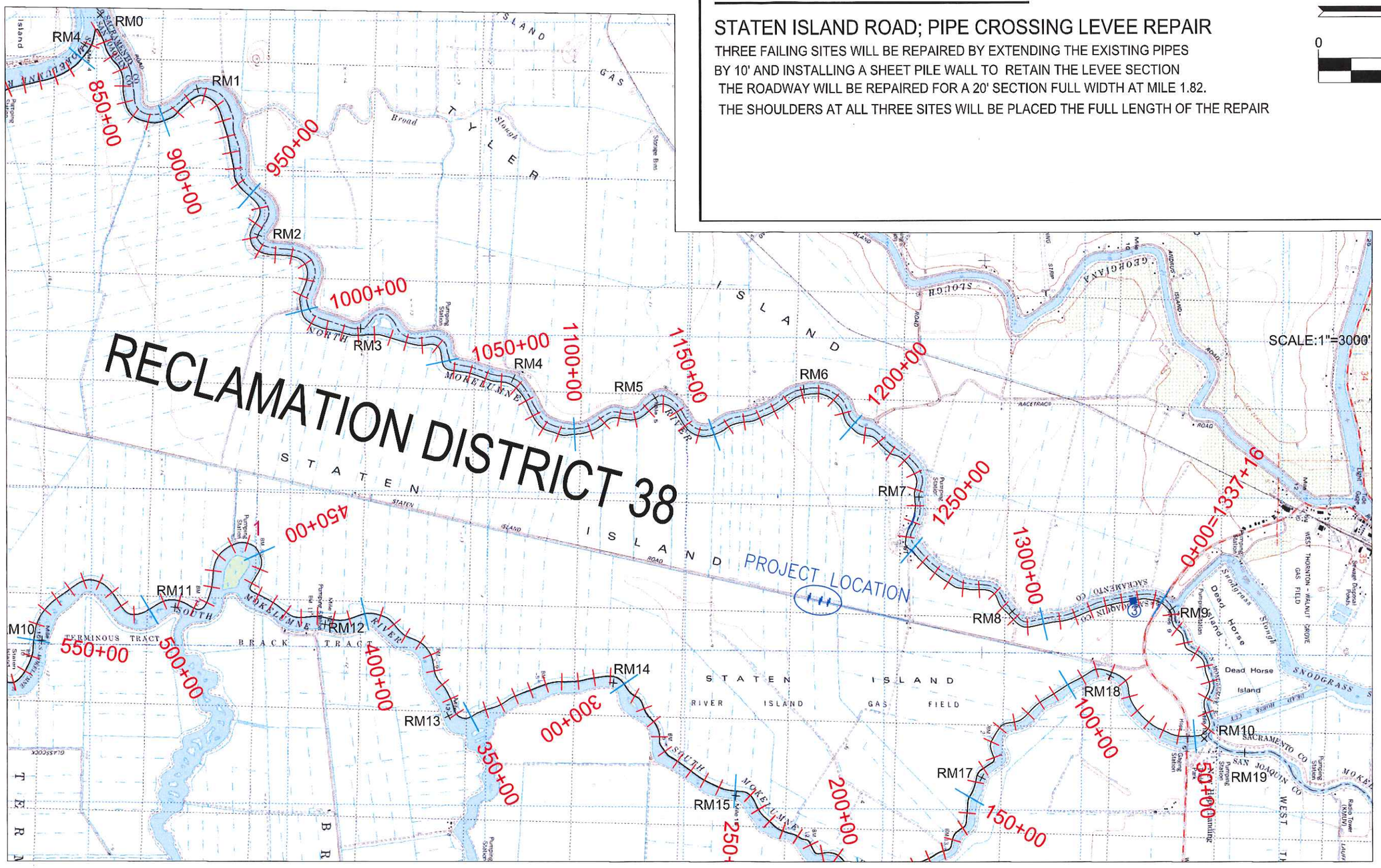

DATA REFERENCES:
1) VERTICAL DATUM: NAVD88 (NORTH AMERICAN VERTICAL DATUM OF 1988)

ARCHITECT
Gilbert Labrie AIA
(916) 776-2277 Fax (916) 776-2282
P.O. BOX 183, WALNUT GROVE, CA 95690

DCC ENGINEERING CO., INC.
PLANNING
PERMITTING
ARCHITECTURE
CIVIL ENGINEERING
PROJECT MANAGEMENT
P.O. BOX 929, GROVE, CA 95690 TEL (916) 776-2277 FAX (916) 776-2282

DESIGNED BY: G. LABRIE
DRAWN BY: J. MEDINA
CHECK BY: G. LABRIE

SCALE: AS SHOWN
ORIGINAL DRAWING SCALE 0" 1/2" 1"

REVISIONS				
SYM	DESCRIPTION	DATE	BY	APRVD. BY
.	.	.	.	.

RECLAMATION DISTRICT 38
(STATEN ISLAND)

PROJECT LOCATION
STATEN ISLAND ROAD REPAIR

DATE: 10-29-2014
SHEET NUMBER: 1
PROJECT NO. 7076.43

CONSTRUCTION PROJECTS

COUNTY ROAD REPAIR
NEW BULKHEAD AND CULVERT EXTENSION

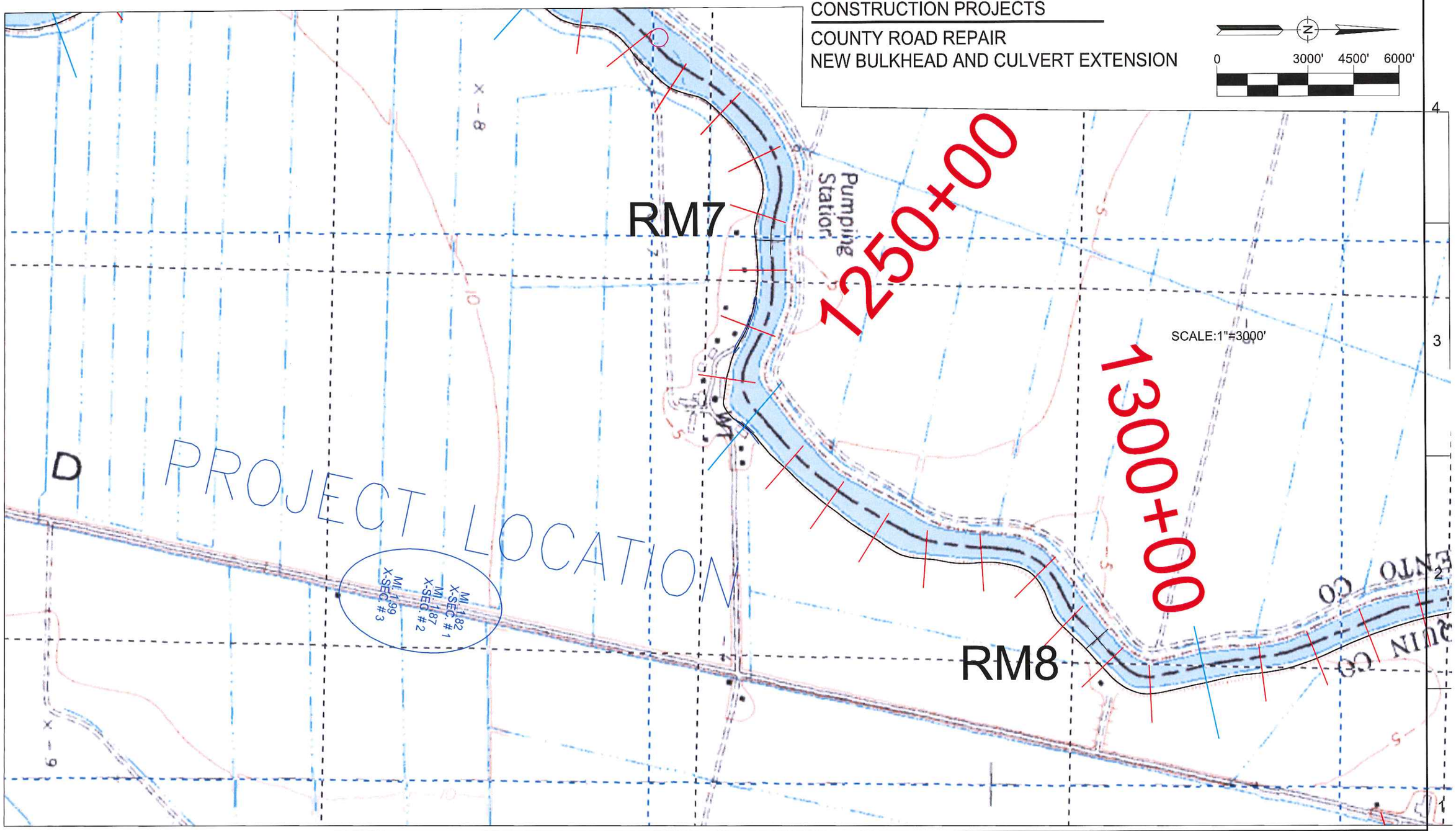

DATA REFERENCES:
1) VERTICAL DATUM: NAVD88 (NORTH AMERICAN VERTICAL DATUM OF 1988)

ARCHITECT
Gilbert Labrie AIA
(916) 776-2277 Fax (916) 776-2282
P.O. BOX 183, WALNUT GROVE, CA 95690

DCC ENGINEERING CO., INC.
PLANNING
PERMITTING
ARCHITECTURE
CIVIL ENGINEERING
PROJECT MANAGEMENT
P.O. BOX 929, GROVE, CA 95690 TEL (916) 776-2277 FAX (916) 776-2282

DESIGNED BY: G. LABRIE
DRAWN BY: J. MEDINA
CHECK BY: G. LABRIE

SCALE: AS SHOWN
ORIGINAL DRAWING SCALE 0" 1/2" 1"

REVISIONS

SYM	DESCRIPTION	DATE	BY	APRVD. BY
.	.	.	.	.

RECLAMATION DISTRICT 38
(STATEN ISLAND)

PROJECT LOCATION
COUNTY ROAD REPAIR

DATE: 9-8-2015
SHEET NUMBER: 2
PROJECT NO. 7076.43

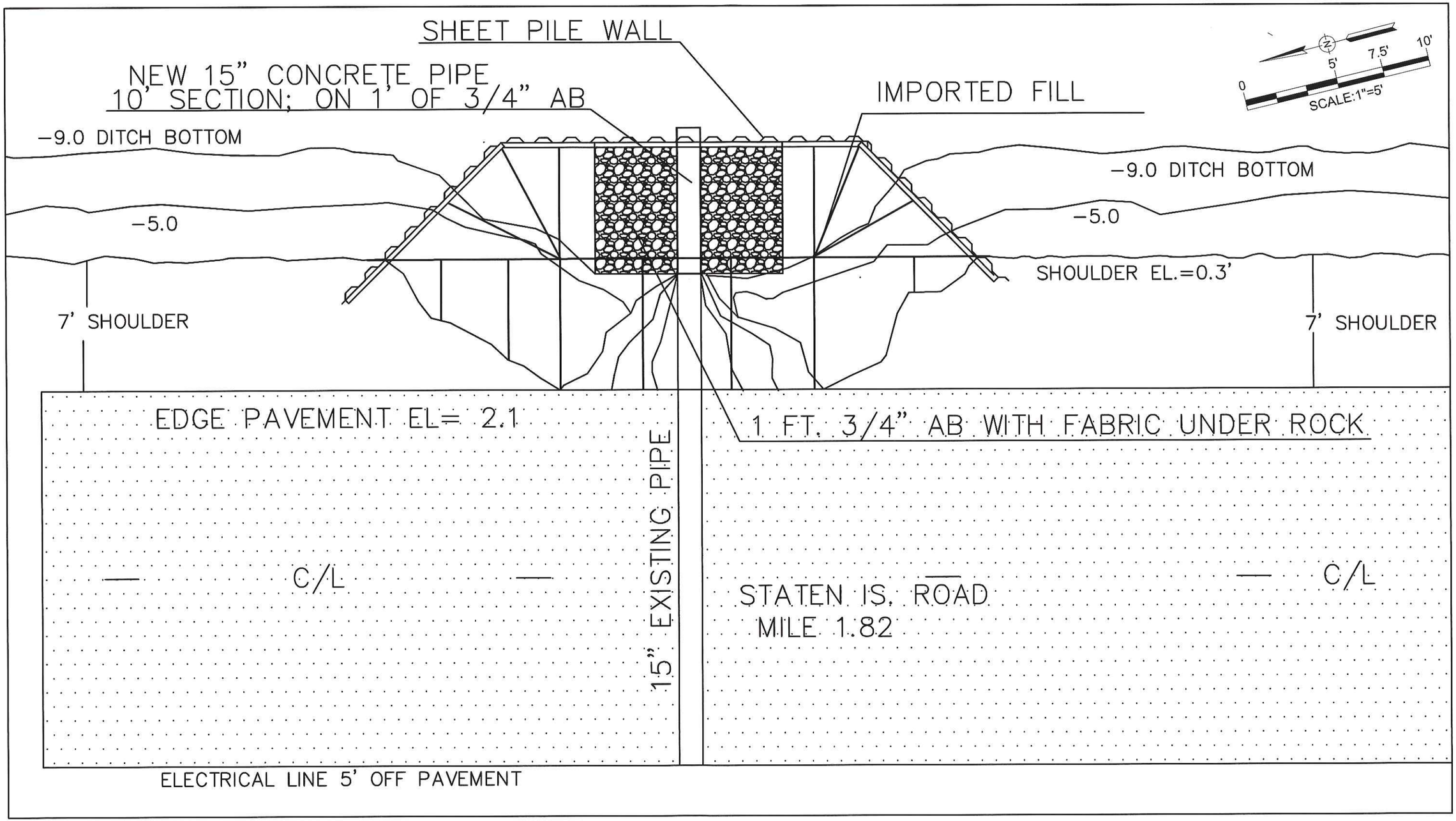

DATA REFERENCES:
1) VERTICAL DATUM: NAVD88 (NORTH AMERICAN VERTICAL DATUM OF 1988

ARCHITECT
Gilbert Labrie AIA
(916) 776-2277 Fax (916) 776-2282
P.O. BOX 183, WALNUT GROVE, CA 95690

DCC ENGINEERING CO.,INC.
PLANNING
PERMITTING
ARCHITECTURE
CIVIL ENGINEERING
PROJECT MANAGEMENT
P.O. BOX 929, GROVE, CA 95690 TEL (916) 776-2277 FAX (916) 776-2282

DESIGNED BY: NAME
DRAWN BY: NAME
CHECK BY: NAME

SCALE: H: 1"= 5' V: 1" = 5'
ORIGINAL DRAWING SCALE 0" 1/2" 1"

REVISIONS				
SYM	DESCRIPTION	DATE	BY	APRVD. BY

RECLAMATION DISTRICT 38 (STATEN ISLAND)

STATEN IS. ROAD PIPE CROSSING IMPROVMENT

STATEN ISLAND ROAD; MILE 1.82,1.87,1.99

PLAN VIEW MI. 1.82

DATE: 09-15-15
SHEET NUMBER: C2.0
PROJECT NUMBER: 7076.42

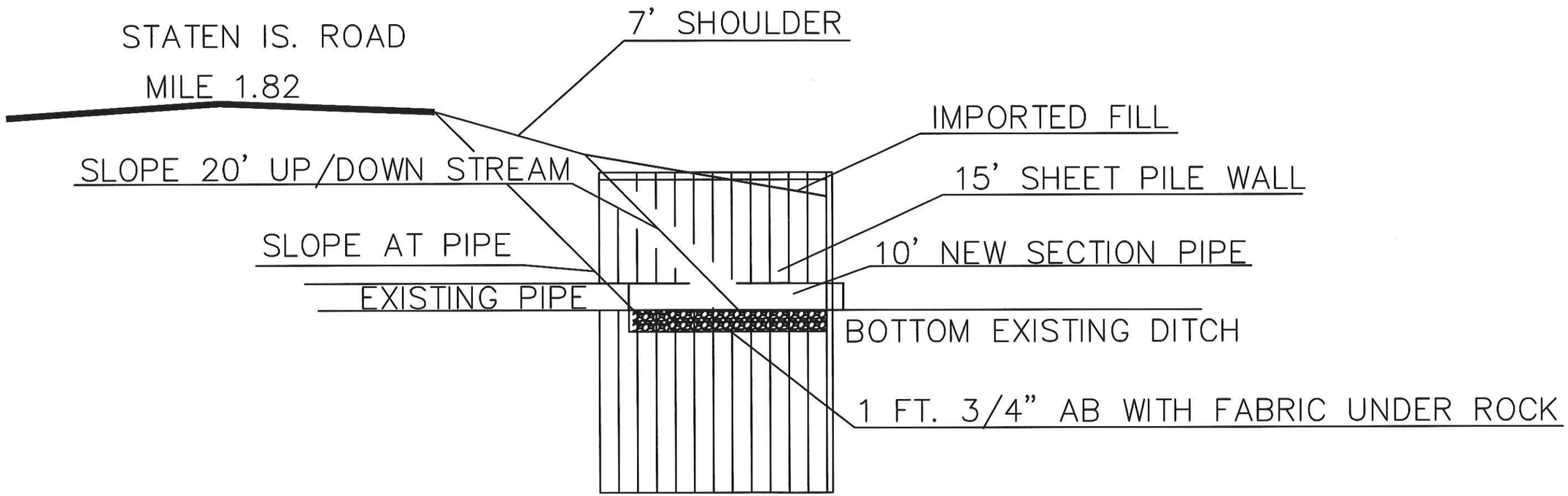

DATA REFERENCES:
1) VERTICAL DATUM: NAVD88 (NORTH AMERICAN VERTICAL DATUM OF 1988

ARCHITECT
Gilbert Labrie AIA
(916) 776-2277 Fax (916) 776-2282
P.O. BOX 183, WALNUT GROVE, CA 95690

DCC ENGINEERING CO., INC.
PLANNING
PERMITTING
ARCHITECTURE
CIVIL ENGINEERING
PROJECT MANAGEMENT
P.O. BOX 929, GROVE, CA 95690 TEL (916) 776-2277 FAX (916) 776-2282

DESIGNED BY: NAME
DRAWN BY: NAME
CHECK BY: NAME

SCALE: H: 1"= 5' V: 1" = 5'
ORIGINAL DRAWING SCALE 0" 1/2" 1"

REVISIONS				
SYM	DESCRIPTION	DATE	BY	APRVD. BY
.	.	.	.	.

RECLAMATION DISTRICT 38 (STATEN ISLAND)

STATEN IS. ROAD PIPE CROSSING IMPROVMENT

STATEN ISLAND ROAD; MILE 1.82,1.87,1.99

SIDE VIEW MI. 1.82

DATE: 09-15-15
SHEET NUMBER: C2.1
PROJECT NUMBER: 7076.42

FRONT VIEW SHEET PILE WALL
ALL SITES MILE; 1.82, 1.87, 1.99
IMPORTED FILL TO BE COMPACTED TO 90%

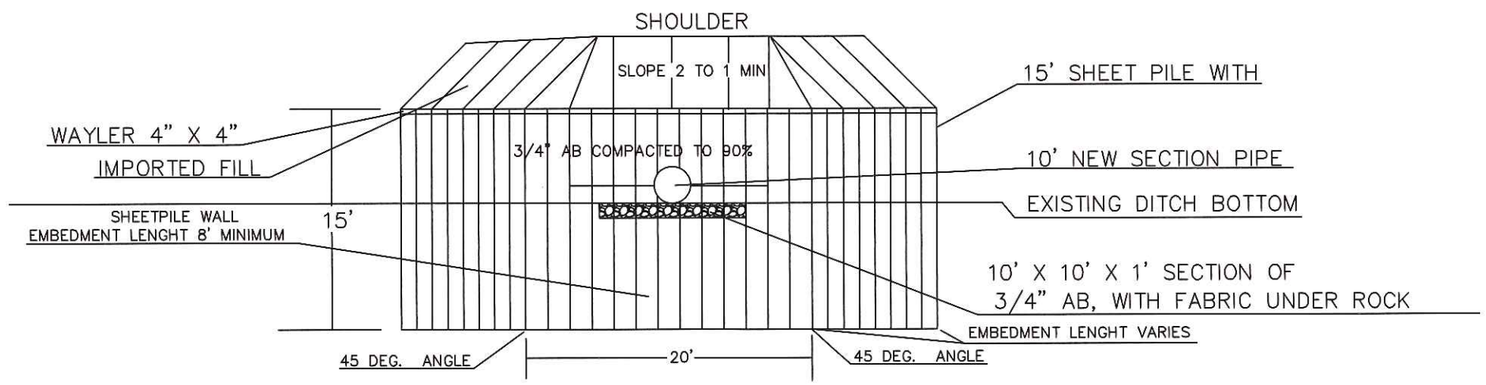

DATA REFERENCES:
1) VERTICAL DATUM: NAVD88 (NORTH AMERICAN VERTICAL DATUM OF 1988

ARCHITECT
Gilbert Labrie AIA
(916) 776-2277 Fax (916) 776-2282
P.O. BOX 183, WALNUT GROVE, CA 95690

DCC ENGINEERING CO.,INC.
PLANNING
PERMITTING
ARCHITECTURE
CIVIL ENGINEERING
PROJECT MANAGEMENT
P.O. BOX 929, GROVE, CA 95690 TEL (916) 776-2277 FAX (916) 776-2282

DESIGNED BY: NAME
DRAWN BY: NAME
CHECK BY: NAME

SCALE: H: 1"= 10' V: 1" = 10'
ORIGINAL DRAWING SCALE 0" 1/2" 1"

REVISIONS				
SYM	DESCRIPTION	DATE	BY	APRVD. BY
.	.	.	.	.

RECLAMATION DISTRICT 38 (STATEN ISLAND)
STATEN IS. ROAD
PIPE CROSSING IMPROVMENT
STATEN ISLAND ROAD MILE; 1.82, 1.87, 1.99
FRONT VIEW SHEET PILES

DATE: 09-15-15
SHEET NUMBER: C2.3
PROJECT NUMBER: 7076.42

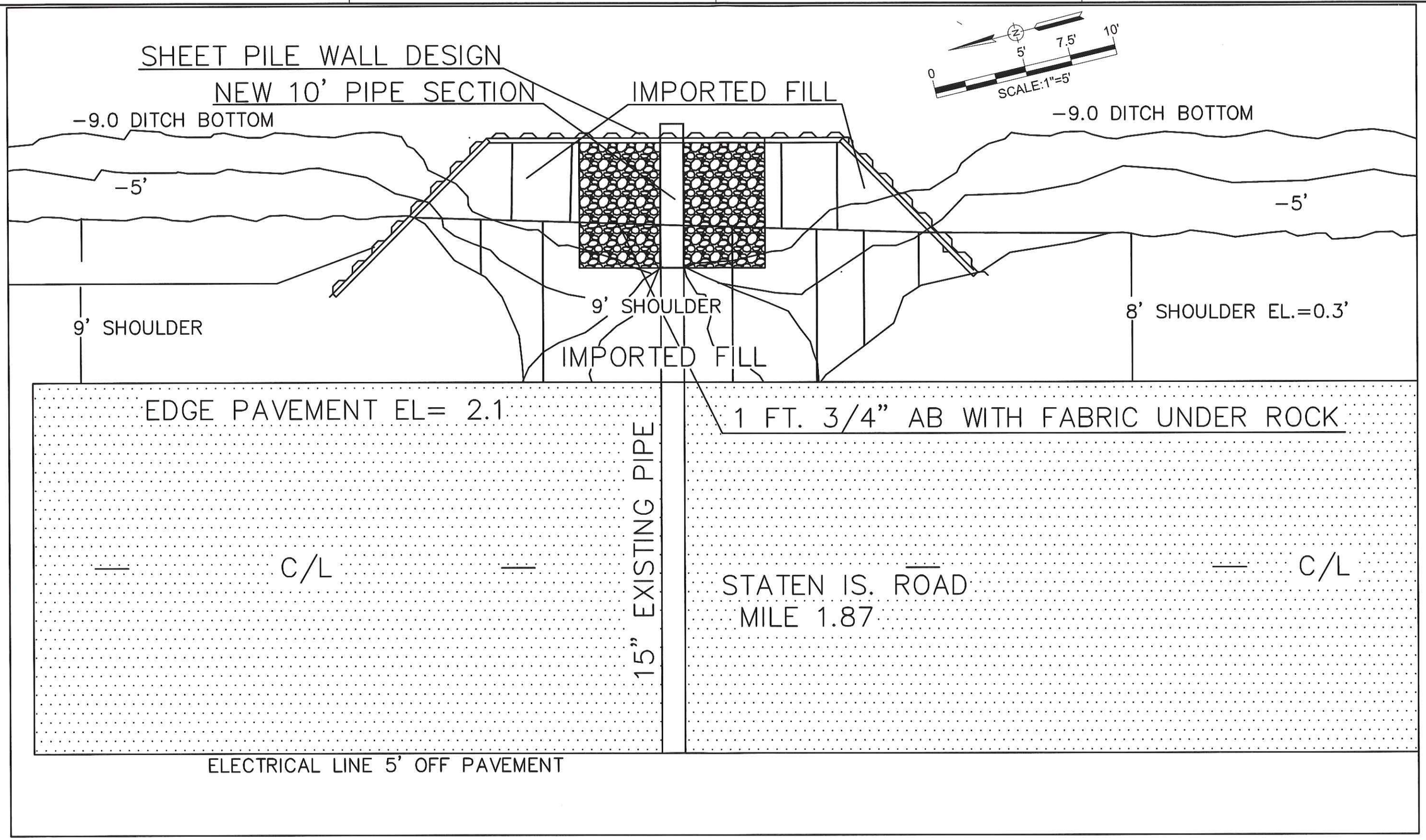

DATA REFERENCES:
1) VERTICAL DATUM: NAVD88 (NORTH AMERICAN VERTICAL DATUM OF 1988

ARCHITECT
Gilbert Labrie AIA
(916) 776-2277 Fax (916) 776-2282
P.O. BOX 183, WALNUT GROVE, CA 95690

DCC ENGINEERING CO.,INC.
PLANNING
PERMITTING
ARCHITECTURE
CIVIL ENGINEERING
PROJECT MANAGEMENT
P.O. BOX 929, GROVE, CA 95690 TEL (916) 776-2277 FAX (916) 776-2282

DESIGNED BY: NAME
DRAWN BY: NAME
CHECK BY: NAME

SCALE: H: 1"= 5' V: 1" = 5'
ORIGINAL DRAWING SCALE 0" 1/2" 1"

REVISIONS

SYM	DESCRIPTION	DATE	BY	APRVD. BY
.	.	.	.	.

RECLAMATION DISTRICT 38 (STATEN ISLAND)
STATEN IS. ROAD
PIPE CROSSING IMPROVMENT
STATEN ISLAND ROAD; MILE 1.82,1.87,1.99
PLAN VIEW MI. 1.87

DATE: 09-15-15
SHEET NUMBER: C2.3
PROJECT NUMBER: 7076.42

SHEET PILE WALL DESIGN

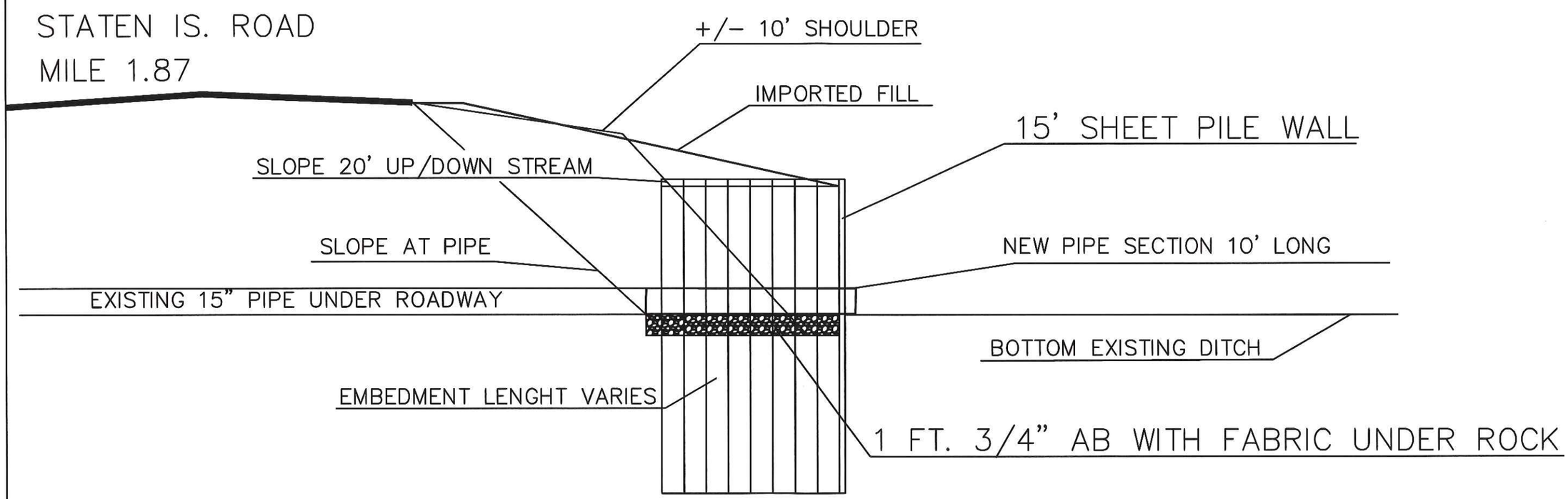

DATA REFERENCES:
1) VERTICAL DATUM: NAVD88 (NORTH AMERICAN VERTICAL DATUM OF 1988

ARCHITECT
Gilbert Labrie AIA
(916) 776-2277 Fax (916) 776-2282
P.O. BOX 183, WALNUT GROVE, CA 95690

DCC ENGINEERING CO.,INC.
PLANNING
PERMITTING
ARCHITECTURE
CIVIL ENGINEERING
PROJECT MANAGEMENT
P.O. BOX 929, GROVE, CA 95690 TEL (916) 776-2277 FAX (916) 776-2282

DESIGNED BY: BEN
DRAWN BY: BEN
CHECK BY: BEN

SCALE:
H: 1"= 5'
V: 1" = 5'
ORIGINAL DRAWING SCALE
0" 1/2" 1"

REVISIONS

SYM	DESCRIPTION	DATE	BY	APRVD. BY
.	.	.	.	.

RECLAMATION DISTRICT 38 (STATEN ISLAND)
STATEN ISLAND ROAD
PIPE CROSSING IMPROVMENT
STATEN ISLAND ROAD; MILE 1.82,1.87,1.99
SIDE VIEW MI. 1.87

DATE: 09-15-15
SHEET NUMBER: C2.4
PROJECT NUMBER: 7076.42

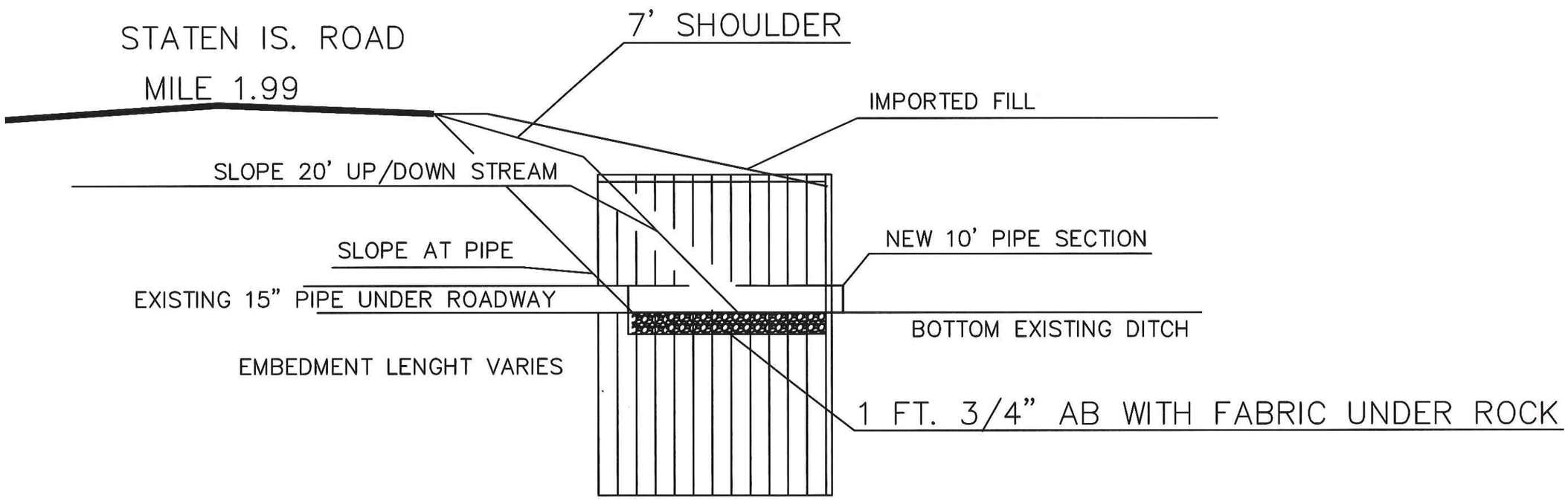

DATA REFERENCES:
1) VERTICAL DATUM: NAVD88 (NORTH AMERICAN VERTICAL DATUM OF 1988

ARCHITECT
Gilbert Labrie AIA
(916) 776-2277 Fax (916) 776-2282
P.O. BOX 183, WALNUT GROVE, CA 95690

DCC ENGINEERING CO., INC.
PLANNING
PERMITTING
ARCHITECTURE
CIVIL ENGINEERING
PROJECT MANAGEMENT
P.O. BOX 929, GROVE, CA 95690 TEL (916) 776-2277 FAX (916) 776-2282

DESIGNED BY: BEN N.
DRAWN BY: BEN E.
CHECK BY: GIL L.

SCALE: H: 1" = 5' V: 1" = 5'
ORIGINAL DRAWING SCALE 0" 1/2" 1"

REVISIONS				
SYM	DESCRIPTION	DATE	BY	APRVD. BY
.	.	.	.	.

RECLAMATION DISTRICT 38 (STATEN ISLAND)

STATEN IS. ROAD PIPE CROSSING IMPROVEMENT

STATEN ISLAND ROAD MILE 1.99

SIDE VIEW SHEET PILES

DATE: 09-15-15
SHEET NUMBER: C 2.7
PROJECT NUMBER: 7076.42

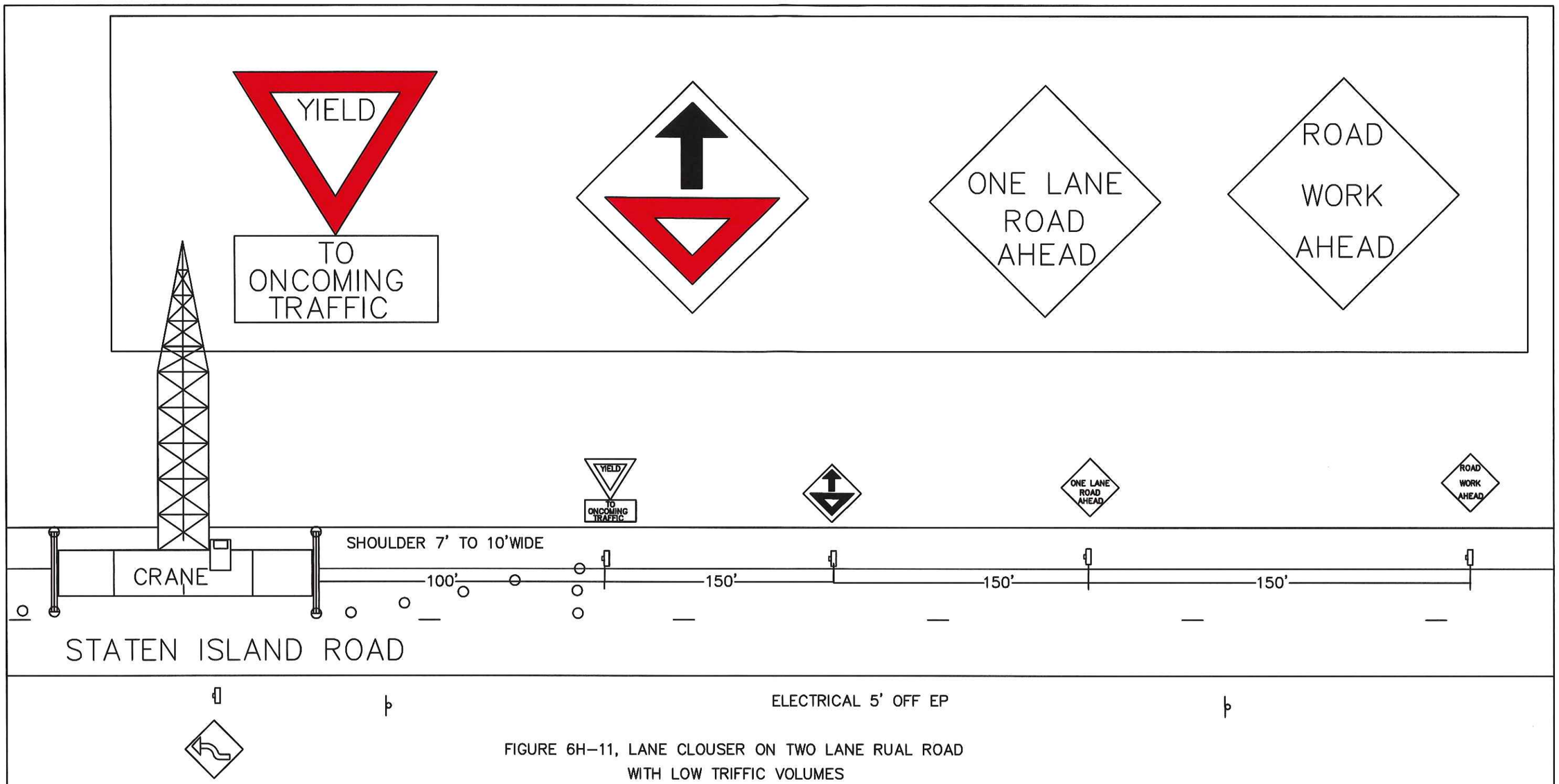

FIGURE 6H–11, LANE CLOUSER ON TWO LANE RUAL ROAD
WITH LOW TRIFFIC VOLUMES
TYPICAL APPLICATION 11

DATA REFERENCES:
1) VERTICAL DATUM: NAVD88 (NORTH AMERICAN VERTICAL DATUM OF 1988

ARCHITECT
Gilbert Labrie AIA
(916) 776-2277 Fax (916) 776-2282
P.O. BOX 183, WALNUT GROVE, CA 95690

DCC ENGINEERING CO., INC.
PLANNING
PERMITTING
ARCHITECTURE
CIVIL ENGINEERING
PROJECT MANAGEMENT
P.O. BOX 929, GROVE, CA 95690 TEL (916) 776-2277 FAX (916) 776-2282

DESIGNED BY: NAME
DRAWN BY: NAME
CHECK BY: NAME

SCALE: H: 1"= 20' V: 1" = 20'
ORIGINAL DRAWING SCALE 0" 1/2" 1"

REVISIONS				
SYM	DESCRIPTION	DATE	BY	APRVD. BY
.	.	.	.	.

RECLAMATION DISTRICT 38 (STATEN ISLAND)
STATEN ISLAND ROAD
PIPE CROSSING IMPROVEMENT
STATEN ISLAND ROAD; MILE 1.82,1.87,1.99
TRAFFIC CONTROL

DATE: 09-15-15
SHEET NUMBER: C3.0
PROJECT NUMBER: 7702.42

FIGURE 6H-11, LANE CLOUSER ON TWO LANE RUAL ROAD
WITH LOW TRIFFIC VOLUMES
TYPICAL APPLICATION 11

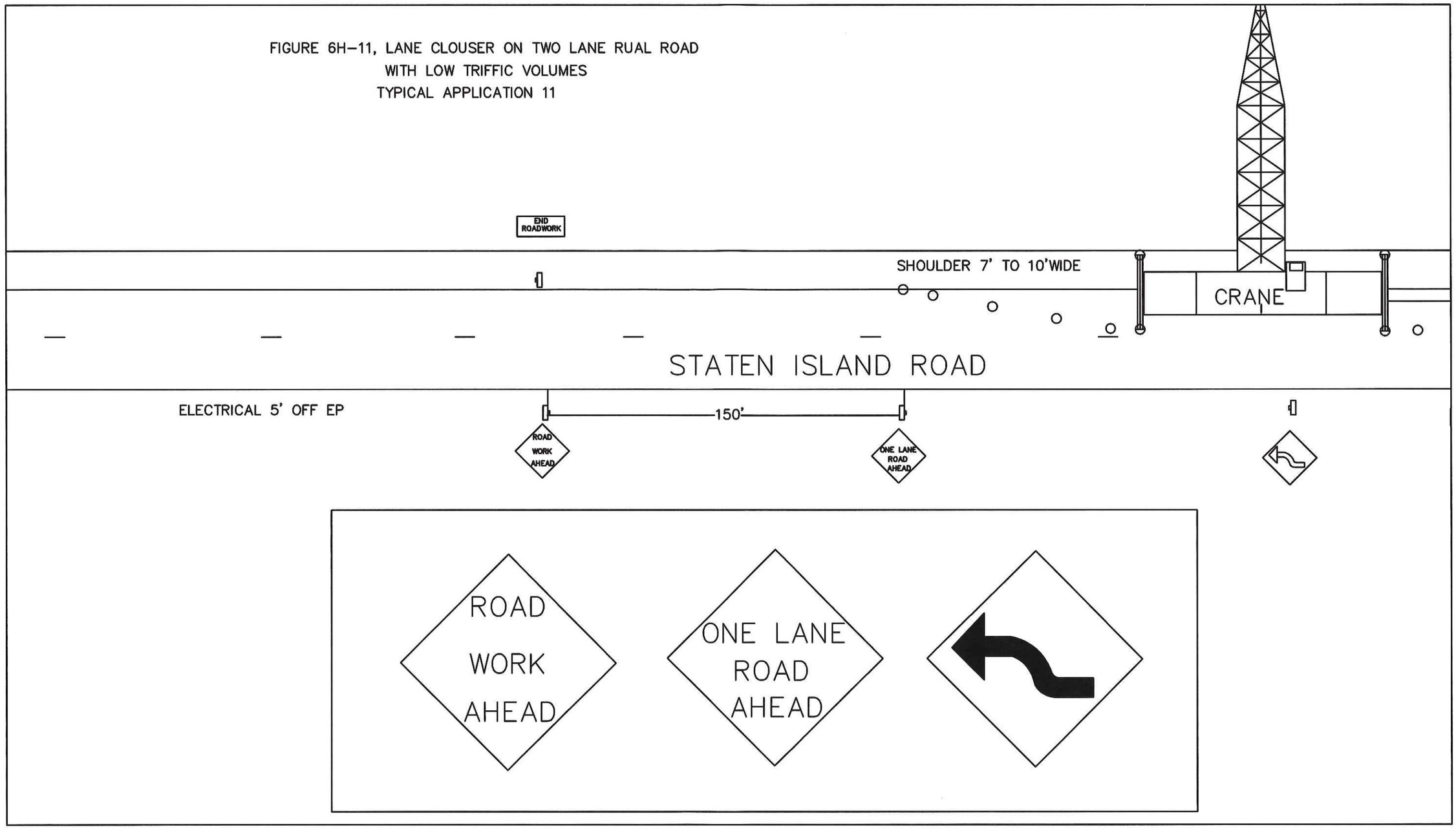

DATA REFERENCES:
1) VERTICAL DATUM: NAVD88 (NORTH AMERICAN VERTICAL DATUM OF 1988

ARCHITECT
Gilbert Labrie AIA
(916) 776-2277 Fax (916) 776-2282
P.O. BOX 183, WALNUT GROVE, CA 95690

DCC ENGINEERING CO.,INC.
PLANNING
PERMITTING
ARCHITECTURE
CIVIL ENGINEERING
PROJECT MANAGEMENT
P.O. BOX 929, GROVE, CA 95690 TEL (916) 776-2277 FAX (916) 776-2282

DESIGNED BY: BEN
DRAWN BY: BEN
CHECK BY: BEN

SCALE:
H: 1"= 5'
V: 1" = 5'
ORIGINAL DRAWING SCALE
0" 1/2" 1"

REVISIONS				
SYM	DESCRIPTION	DATE	BY	APRVD. BY
.	.	.	.	.

RECLAMATION DISTRICT 38 (STATEN ISLAND)

STATEN IS. ROAD
PIPE CROSSING IMPROVMENT

STATEN ISLAND ROAD; MILE 1.82,1.87,1.99

SEC. A-A & B-B

DATE: 09-15-15
SHEET NUMBER: C3.1
PROJECT NUMBER: 7076.42

MEMO;

TO; COUNTY STAFF;

FROM; BEN NEELY DCC ENGINEERING

Attached is an email from Gerald Smith stating that the County will replace the pavement if the farmer fixes the failing slope.

Other than the pavement repair being deleted from the plan set all is as previously submitted.

Thank You Ben

Ben Neely

From: Ben Neely
Sent: Tuesday, November 03, 2015 10:31 AM
To: 'tcallahan@sjgov.org'
Cc: 'Dawit Zeleke'; Gilbert Labrie
Subject: FW: Road / Pipe repair & Revetment of levees

Tim; I have attached an email that was sent to Staten Island Manager about the Project that you are checking at this time. Can you send it to Najee to show him why my client believes that Staten Island, will not have to pay for paving. I will bring photos of the roadway into the County in the Morning and would like a chance to speak with Najee tomorrow about the issue. In reality; the areas around the pipes are not in any worst shape than the rest of the road.

Thanks

Ben

From: Dawit Zeleke [mailto:dzeleke@TNC.ORG]
Sent: Friday, October 30, 2015 10:46 AM
To: Ben Neely <BNeely@dccengineering.net>
Subject: Re: Road / Pipe repair & Revetment of levees

Here is the e mail from the county.

Dawit

From: Gerald Smith
Sent: Tuesday, June 16, 2015 11:16 AM
To: 'brent@cfrstaten.com'
Cc: Larry "Butch" Waddle; Troy Botts
Subject: FW: Staten Island road and culvert repair

Good morning Brent,

Thank you for your response.

We are in agreement, this situation needs addressing.

The County Road Maintenance Division did not install the failing culverts.

Sweetmandarins.com

From: Ben Neely <BNeely@dccengineering.net>
Date: Tuesday, October 27, 2015 at 9:59 AM
To: Dawit zeleke <dzeleke@tnc.org>
Subject: RE: Road / Pipe repair & Revetment of levees

Hi Dawit: Just talked to the County, SJ County that is. They want us to pavement repair all the sites. Can you find and send me the email tat states we don't have to do the pavement repair?

That would let us out of the work... Hopefully...

Ben

From: Dawit Zeleke [mailto:dzeleke@TNC.ORG]
Sent: Wednesday, October 21, 2015 7:15 PM
To: Ben Neely <BNeely@dccengineering.net>
Subject: Re: Road / Pipe repair & Revetment of levees

Yes I will like to meet in person and go over both projects. Thank you for moving them along. Once the road work has gone out to bid and we have a contractor I will need to route it through the company that will take about two weeks. The sooner it is wrapped up at your end the better.
The levee work will require some hand holding.
Has the RD already approved?
We wanted to park a barge full off rock off the southern tip of the island, during the high water, is this part of that or additional work that needs to happen sooner?
Next week looks good if you all are available.

Thank you
Dawit

Sent from my iPhone
Dawit 530-518-7244

On Oct 21, 2015, at 4:25 PM, Ben Neely <BNeely@dccengineering.net> wrote:

> Hi Dawit; I have been working on the roadway pipe repair for Staten Island Road. I have the plans into San Joaquin County. I'm guessing they'll take another week to review the plans. They have had the plans a week... maybe a little longer. Gil and I decided that it will be cheaper and a better structure if we go with sheet pile wall outside of the pipe extensions that we need.
>
> My Engineer's estimate is 150 K for the work.
>
> I have also surveyed the levees and have determined sites that need to be armored. I have put together a set of plans and we are recommending 4,000 tons of rip-rap. That will run a little over 250 K for that allotment. Just out of curiosity will you have Morgan oversee the placement of the rock, or do you want us to do it? Either way... we are here to service your needs.

CONSTRUCTION PROJECTS

STATEN ISLAND ROAD; PIPE CROSSING LEVEE REPAIR

THREE FAILING SITES WILL BE REPAIRED BY EXTENDING THE EXISTING PIPES BY 10' AND INSTALLING A SHEET PILE WALL TO RETAIN THE LEVEE SECTION

THE ROADWAY WILL BE REPAIRED FOR A 20' SECTION FULL WIDTH AT MILE 1.82.

THE SHOULDERS AT ALL THREE SITES WILL BE PLACED THE FULL LENGTH OF THE REPAIR

N

0 3000' 4500' 6000'

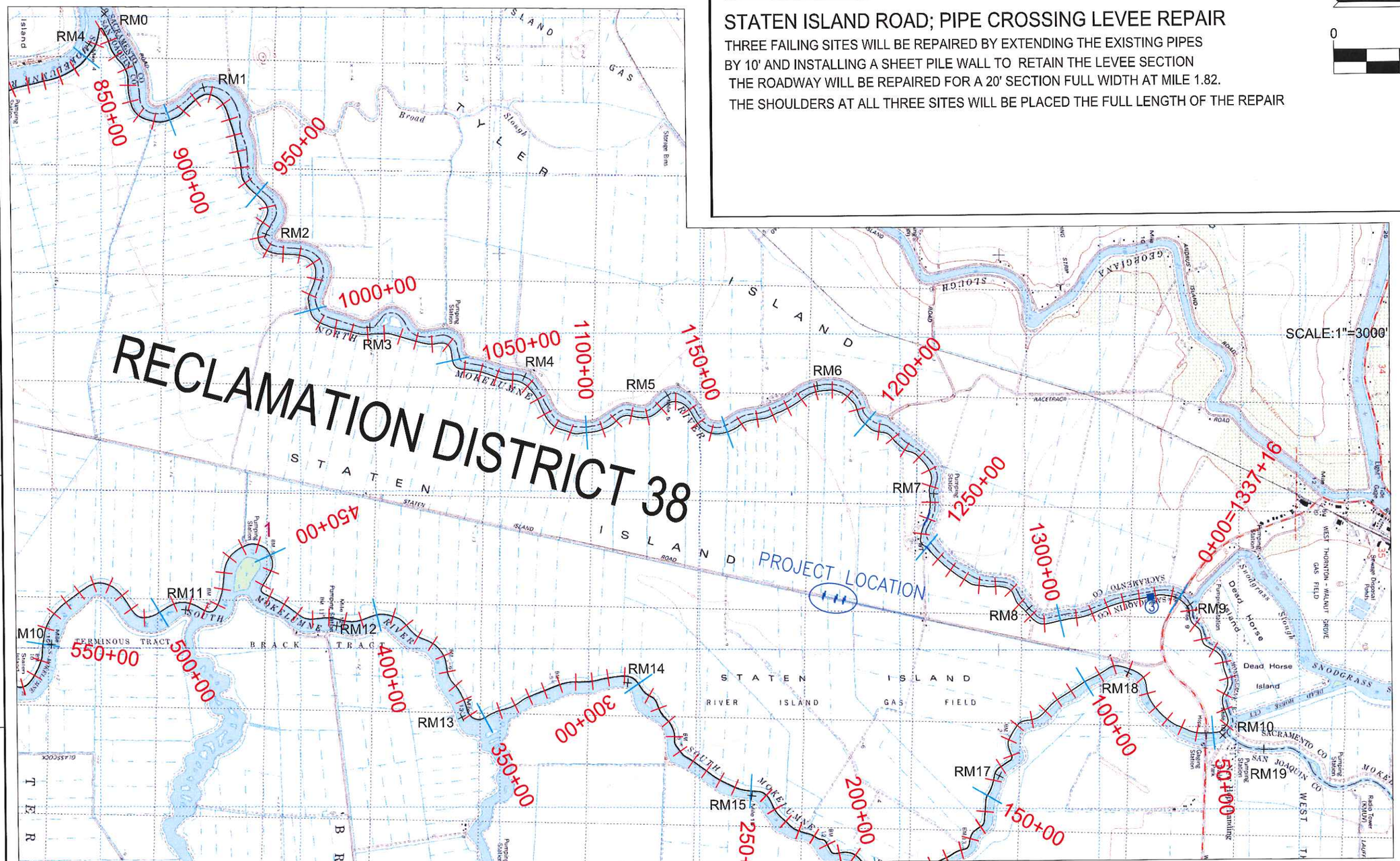

DATA REFERENCES:
1) VERTICAL DATUM: NAVD88 (NORTH AMERICAN VERTICAL DATUM OF 1988)

ARCHITECT
Gilbert Labrie AIA
(916) 776-2277 Fax (916) 776-2282
P.O. BOX 183, WALNUT GROVE, CA 95690

DCC ENGINEERING CO., INC.
PLANNING
PERMITTING
ARCHITECTURE
CIVIL ENGINEERING
PROJECT MANAGEMENT
P.O. BOX 929, GROVE, CA 95690 TEL (916) 776-2277 FAX (916) 776-2282

DESIGNED BY: G. LABRIE
DRAWN BY: J. MEDINA
CHECK BY: G. LABRIE

SCALE: AS SHOWN
ORIGINAL DRAWING SCALE 0" 1/2" 1"

REVISIONS

SYM	DESCRIPTION	DATE	BY	APRVD. BY
.	.	.	.	.

RECLAMATION DISTRICT 38 (STATEN ISLAND)

PROJECT LOCATION
STATEN ISLAND ROAD REPAIR

DATE: 10-29-2014
SHEET NUMBER: 1
PROJECT NO. 7076.43

CONSTRUCTION PROJECTS

COUNTY ROAD REPAIR
NEW BULKHEAD AND CULVERT EXTENSION

0 3000' 4500' 6000'

SCALE:1"=3000'

RM7

RM8

1250+00

1300+00

Pumping Station

PROJECT LOCATION

M: 182
X-SEC: # 1
M: 187
X-SEC: # 2
M: 199
X-SEC: # 3

DATA REFERENCES:
1) VERTICAL DATUM: NAVD88 (NORTH AMERICAN VERTICAL DATUM OF 1988)

ARCHITECT
Gilbert Labrie AIA
(916) 776-2277 Fax (916) 776-2282
P.O. BOX 183, WALNUT GROVE, CA 95690

DCC ENGINEERING CO., INC.
PLANNING
PERMITTING
ARCHITECTURE
CIVIL ENGINEERING
PROJECT MANAGEMENT
P.O. BOX 929, GROVE, CA 95690 TEL (916) 776-2277 FAX (916) 776-2282

DESIGNED BY: G. LABRIE
DRAWN BY: J. MEDINA
CHECK BY: G. LABRIE

SCALE: AS SHOWN
ORIGINAL DRAWING SCALE 0" 1/2" 1"

REVISIONS

SYM	DESCRIPTION	DATE	BY	APRVD. BY
.	.	.	.	.

RECLAMATION DISTRICT 38
(STATEN ISLAND)

PROJECT LOCATION
COUNTY ROAD REPAIR

DATE: 9-8-2015
SHEET NUMBER: 2
PROJECT NO. 7076.43

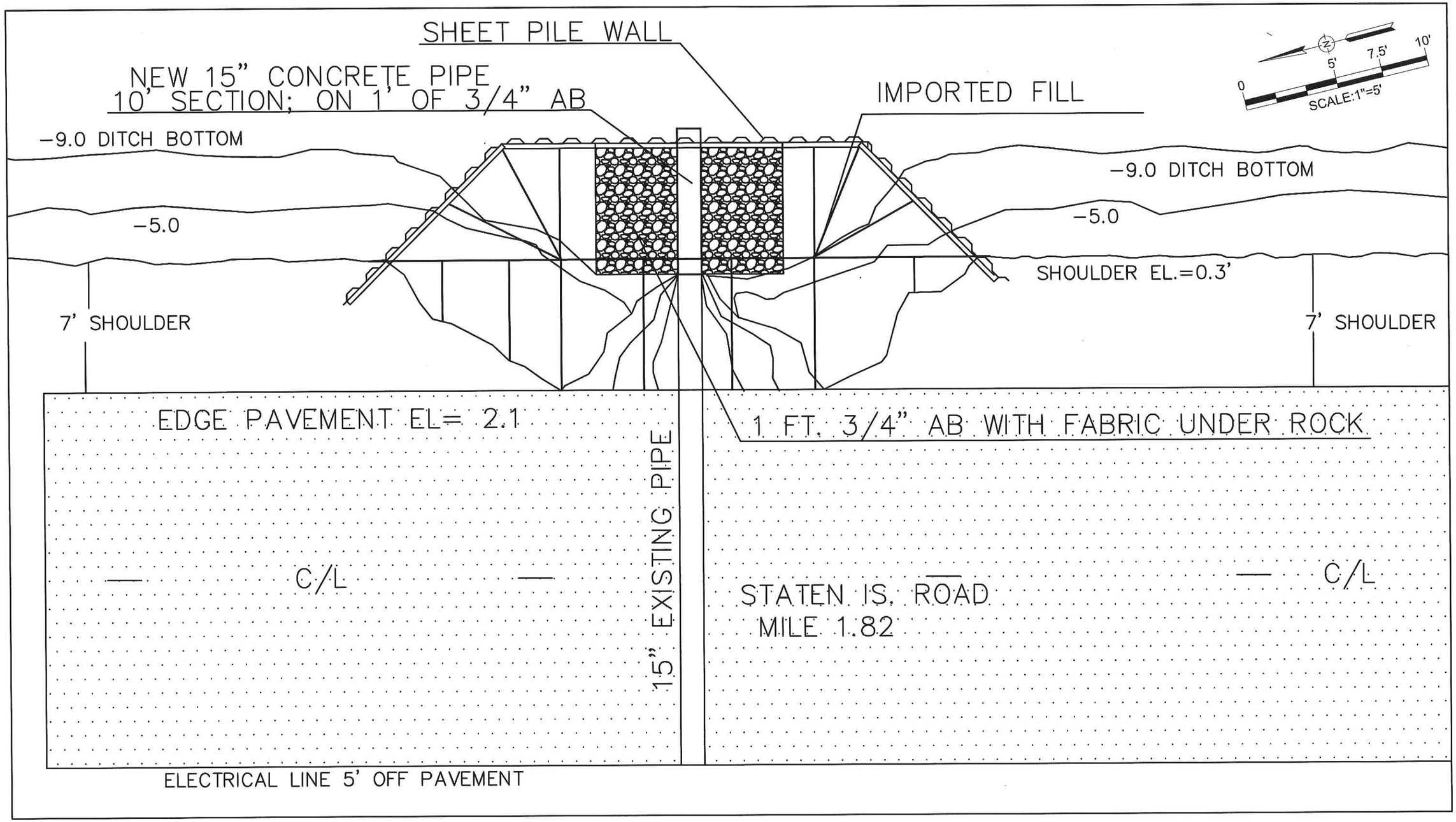

DATA REFERENCES:
1) VERTICAL DATUM: NAVD88 (NORTH AMERICAN VERTICAL DATUM OF 1988

ARCHITECT
Gilbert Labrie AIA
(916) 776-2277 Fax (916) 776-2282
P.O. BOX 183, WALNUT GROVE, CA 95690

DCC ENGINEERING CO., INC.
PLANNING
PERMITTING
ARCHITECTURE
CIVIL ENGINEERING
PROJECT MANAGEMENT
P.O. BOX 929, GROVE, CA 95690 TEL (916) 776-2277 FAX (916) 776-2282

DESIGNED BY: NAME
DRAWN BY: NAME
CHECK BY: NAME

SCALE: H: 1"= 5' V: 1" = 5'
ORIGINAL DRAWING SCALE 0" 1/2" 1"

REVISIONS

SYM	DESCRIPTION	DATE	BY	APRVD. BY
.	.	.	.	.

RECLAMATION DISTRICT 38 (STATEN ISLAND)
STATEN IS. ROAD
PIPE CROSSING IMPROVMENT
STATEN ISLAND ROAD; MILE 1.82,1.87,1.99
PLAN VIEW MI. 1.82

DATE: 09-15-15
SHEET NUMBER: C2.0
PROJECT NUMBER: 7076.42

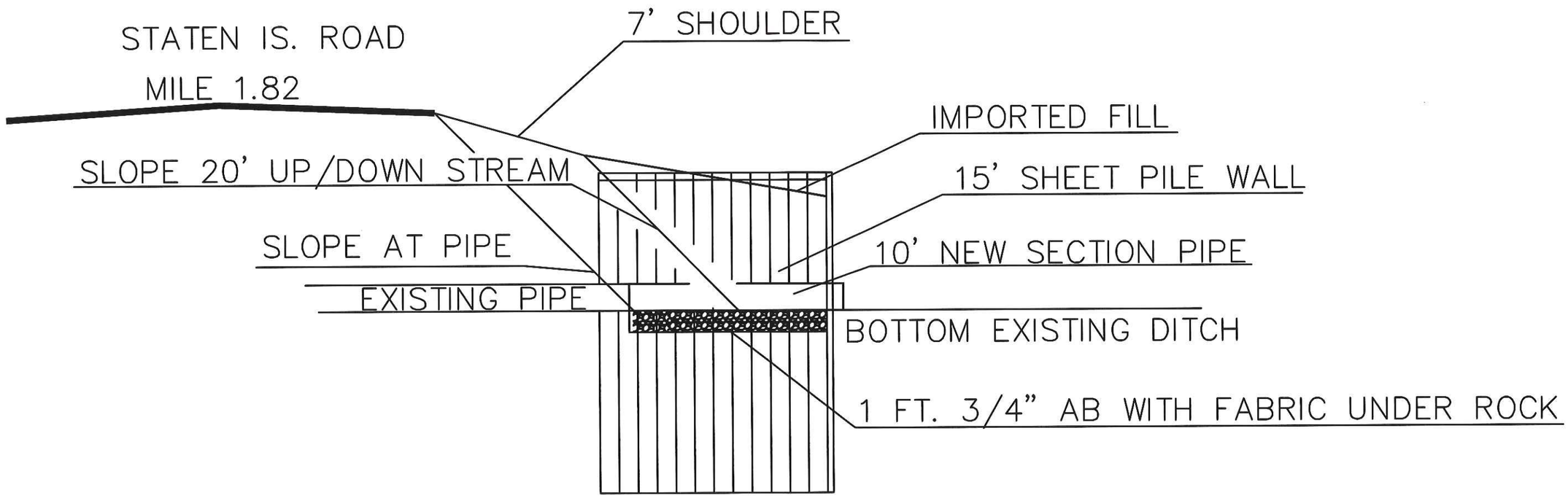

DATA REFERENCES:
1) VERTICAL DATUM: NAVD88 (NORTH AMERICAN VERTICAL DATUM OF 1988

ARCHITECT
Gilbert Labrie AIA
(916) 776-2277 Fax (916) 776-2282
P.O. BOX 183, WALNUT GROVE, CA 95690

DCC ENGINEERING CO., INC.
PLANNING
PERMITTING
ARCHITECTURE
CIVIL ENGINEERING
PROJECT MANAGEMENT
P.O. BOX 929, GROVE, CA 95690 TEL (916) 776-2277 FAX (916) 776-2282

DESIGNED BY: NAME
DRAWN BY: NAME
CHECK BY: NAME

SCALE:
H: 1"= 5'
V: 1" = 5'
ORIGINAL DRAWING SCALE
0" 1/2" 1"

REVISIONS

SYM	DESCRIPTION	DATE	BY	APRVD. BY
.	.	.	.	.

RECLAMATION DISTRICT 38 (STATEN ISLAND)

STATEN IS. ROAD PIPE CROSSING IMPROVMENT

STATEN ISLAND ROAD; MILE 1.82,1.87,1.99

SIDE VIEW MI. 1.82

DATE: 09-15-15
SHEET NUMBER: C2.1
PROJECT NUMBER: 7076.42

FRONT VIEW SHEET PILE WALL
ALL SITES MILE; 1.82, 1.87, 1.99
IMPORTED FILL TO BE COMPACTED TO 90%

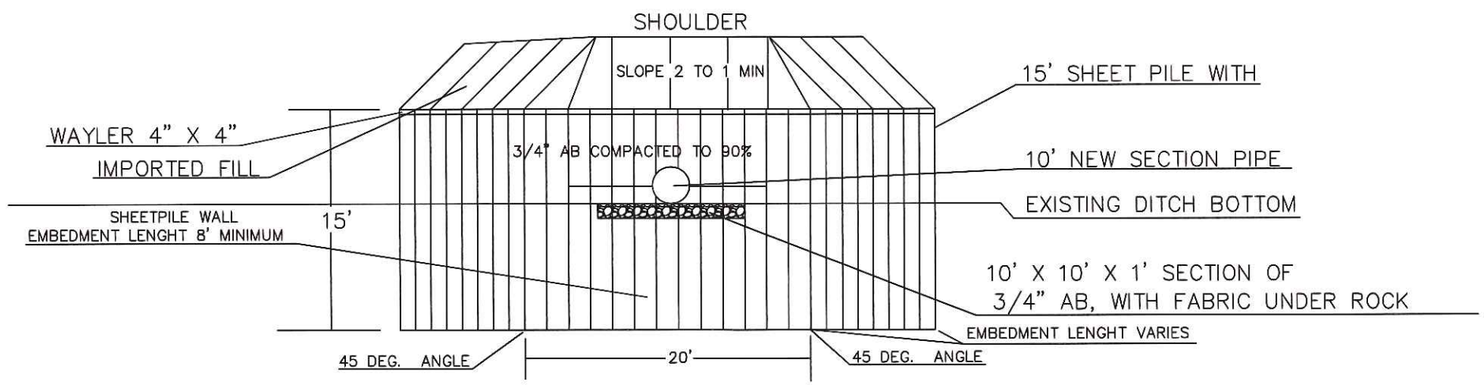

DATA REFERENCES:
1) VERTICAL DATUM: NAVD88 (NORTH AMERICAN VERTICAL DATUM OF 1988

ARCHITECT
Gilbert Labrie AIA
(916) 776-2277 Fax (916) 776-2282
P.O. BOX 183, WALNUT GROVE, CA 95690

DCC ENGINEERING CO.,INC.
PLANNING
PERMITTING
ARCHITECTURE
CIVIL ENGINEERING
PROJECT MANAGEMENT
P.O. BOX 929, GROVE, CA 95690 TEL (916) 776-2277 FAX (916) 776-2282

DESIGNED BY: NAME
DRAWN BY: NAME
CHECK BY: NAME

SCALE: H: 1"= 10' V: 1" = 10'
ORIGINAL DRAWING SCALE 0" 1/2" 1"

REVISIONS				
SYM	DESCRIPTION	DATE	BY	APRVD. BY
.	.	.	.	.

RECLAMATION DISTRICT 38 (STATEN ISLAND)
STATEN IS. ROAD
PIPE CROSSING IMPROVMENT
STATEN ISLAND ROAD MILE; 1.82, 1.87, 1.99
FRONT VIEW SHEET PILES

DATE: 09-15-15
SHEET NUMBER: C2.3
PROJECT NUMBER: 7076.42

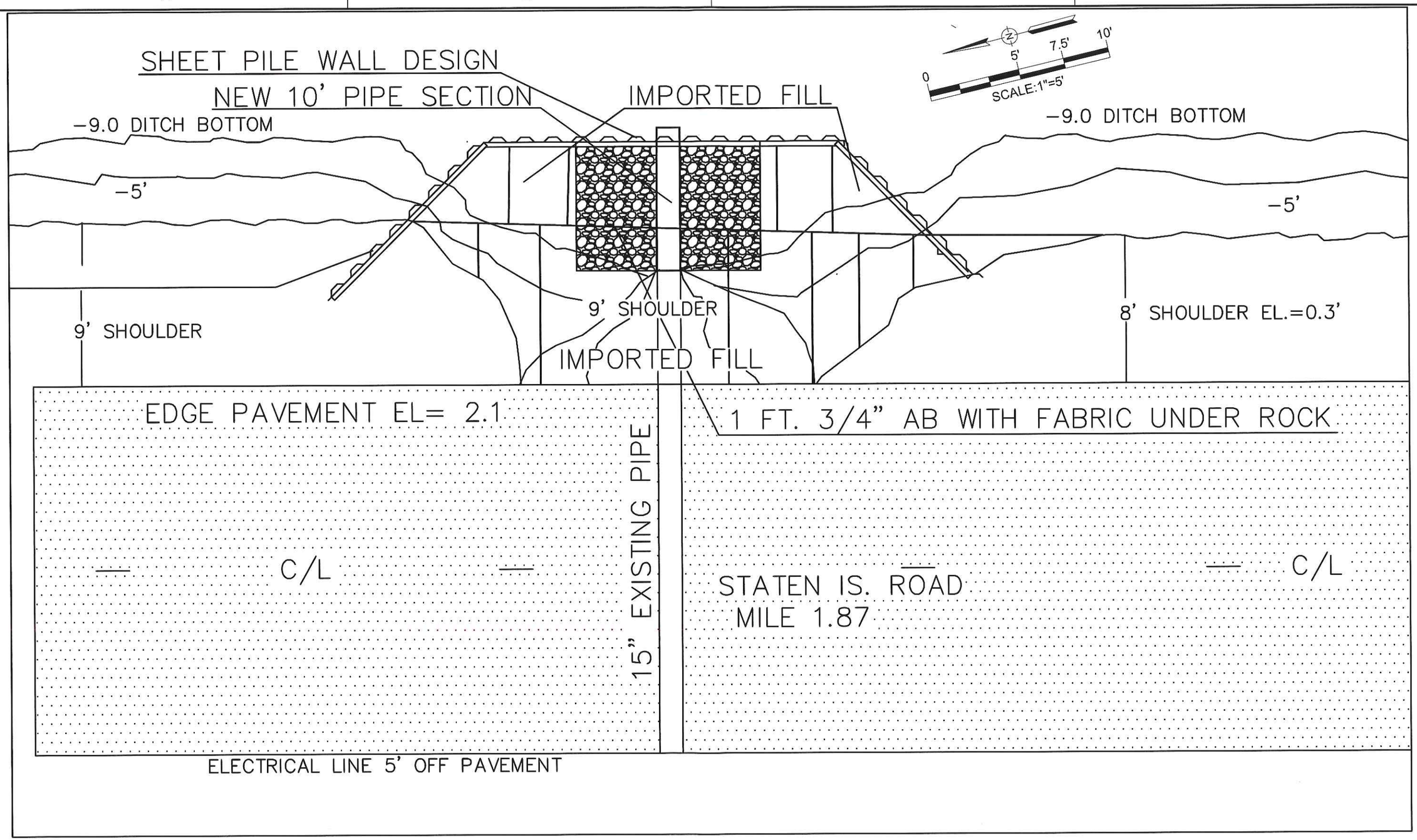

DATA REFERENCES:
1) VERTICAL DATUM: NAVD88 (NORTH AMERICAN VERTICAL DATUM OF 1988

ARCHITECT
Gilbert Labrie AIA
(916) 776-2277 Fax (916) 776-2282
P.O. BOX 183, WALNUT GROVE, CA 95690

DCC ENGINEERING CO., INC.
PLANNING
PERMITTING
ARCHITECTURE
CIVIL ENGINEERING
PROJECT MANAGEMENT
P.O. BOX 929, GROVE, CA 95690 TEL (916) 776-2277 FAX (916) 776-2282

DESIGNED BY: NAME
DRAWN BY: NAME
CHECK BY: NAME

SCALE:
H: 1"= 5'
V: 1" = 5'
ORIGINAL DRAWING SCALE
0" 1/2" 1"

REVISIONS

SYM	DESCRIPTION	DATE	BY	APRVD. BY
.	.	.	.	.

RECLAMATION DISTRICT 38 (STATEN ISLAND)

STATEN IS. ROAD PIPE CROSSING IMPROVMENT

STATEN ISLAND ROAD; MILE 1.82,1.87,1.99

PLAN VIEW MI. 1.87

DATE: 09-15-15
SHEET NUMBER: C2.3
PROJECT NUMBER: 7076.42

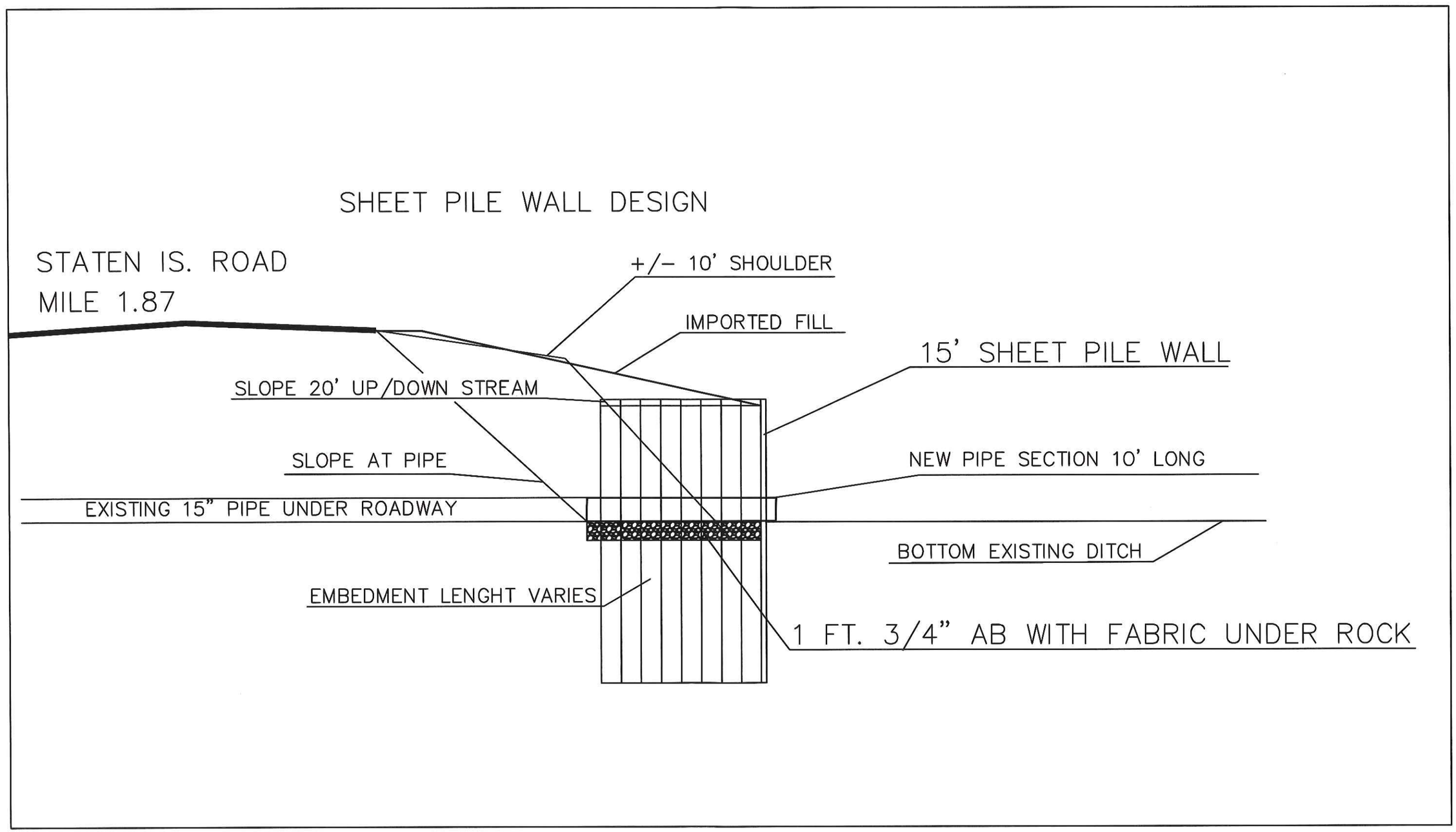

DATA REFERENCES:
1) VERTICAL DATUM: NAVD88 (NORTH AMERICAN VERTICAL DATUM OF 1988

ARCHITECT
Gilbert Labrie AIA
(916) 776-2277 Fax (916) 776-2282
P.O. BOX 183, WALNUT GROVE, CA 95690

DCC ENGINEERING CO.,INC.
PLANNING
PERMITTING
ARCHITECTURE
CIVIL ENGINEERING
PROJECT MANAGEMENT
P.O. BOX 929, GROVE, CA 95690 TEL (916) 776-2277 FAX (916) 776-2282

DESIGNED BY: BEN
DRAWN BY: BEN
CHECK BY: BEN

SCALE: H: 1"= 5' V: 1" = 5'
ORIGINAL DRAWING SCALE 0" 1/2" 1"

REVISIONS				
SYM	DESCRIPTION	DATE	BY	APRVD. BY
.	.	.	.	.

RECLAMATION DISTRICT 38 (STATEN ISLAND)
STATEN ISLAND ROAD
PIPE CROSSING IMPROVMENT
STATEN ISLAND ROAD; MILE 1.82,1.87,1.99
SIDE VIEW MI. 1.87

DATE: 09-15-15
SHEET NUMBER: C2.4
PROJECT NUMBER: 7076.42

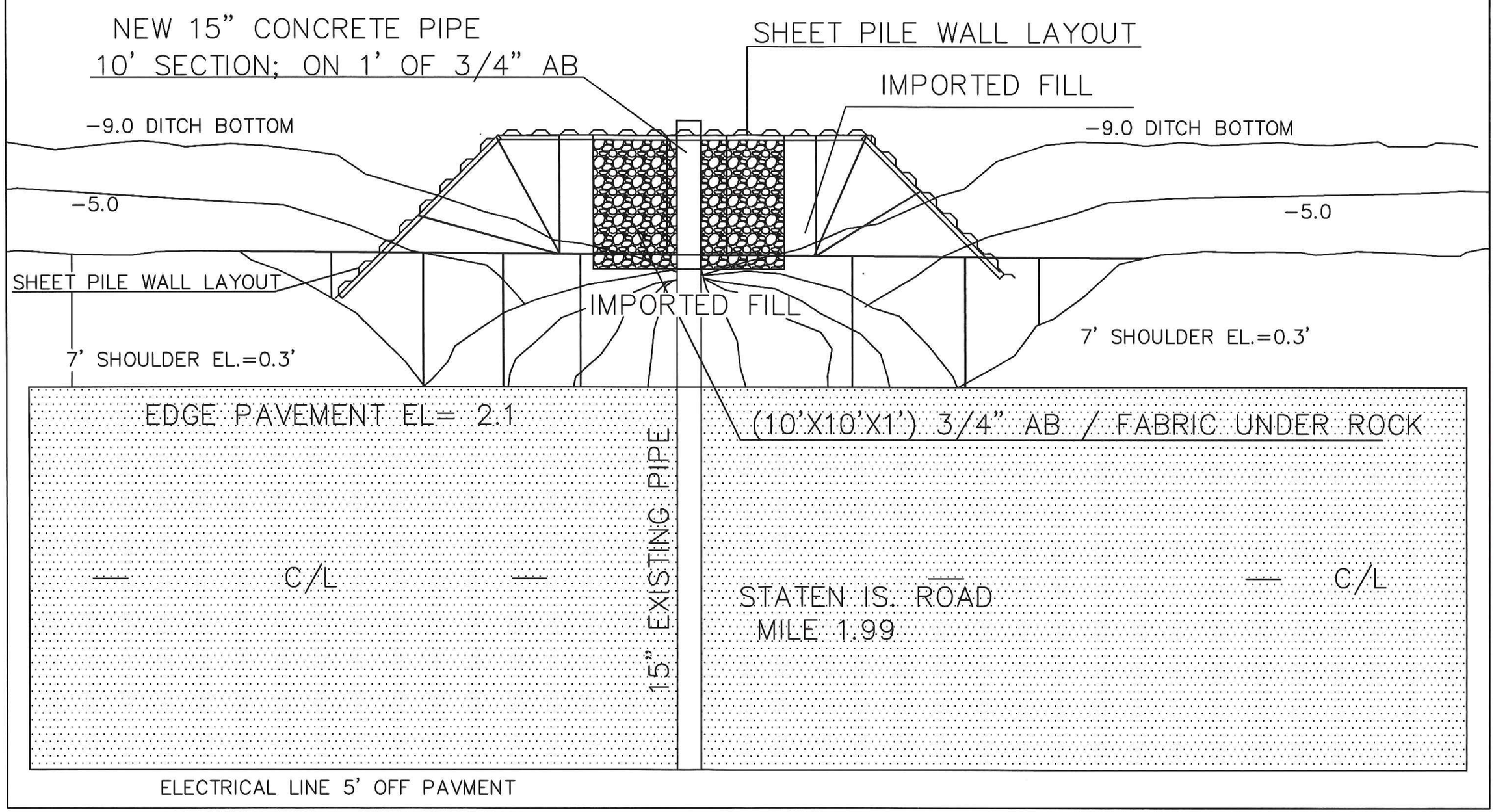

DATA REFERENCES:
1) VERTICAL DATUM: NAVD88 (NORTH AMERICAN VERTICAL DATUM 1988)

ARCHITECT
Gilbert Labrie AIA
(916) 776-2277 Fax (916) 776-2282
P.O. BOX 183, WALNUT GROVE, CA 95690

DCC ENGINEERING CO., INC.
PLANNING
PERMITTING
ARCHITECTURE
CIVIL ENGINEERING
PROJECT MANAGEMENT
P.O. BOX 929, GROVE, CA 95690 TEL (916) 776-2277 FAX (916) 776-2282

DESIGNED BY: BEN
DRAWN BY: BEN
CHECK BY: BEN

SCALE: H: 1" = 5' V: 1" = 5'
ORIGINAL DRAWING SCALE 0" 1/2" 1"

REVISIONS				
SYM	DESCRIPTION	DATE	BY	APRVD. BY
.	.	.	.	.

RECLAMATION DISTRICT 38 (STATEN ISLAND)

STATEN ISLAND ROAD PIPE CROSSING IMPROVMENT

STATEN ISLAND ROAD MILE; 1.82, 1.87, 1.99

PLAN VIEW MI. 1.99

DATE: 09-15-15
SHEET NUMBER: C2.6
PROJECT NUMBER: 7076.42

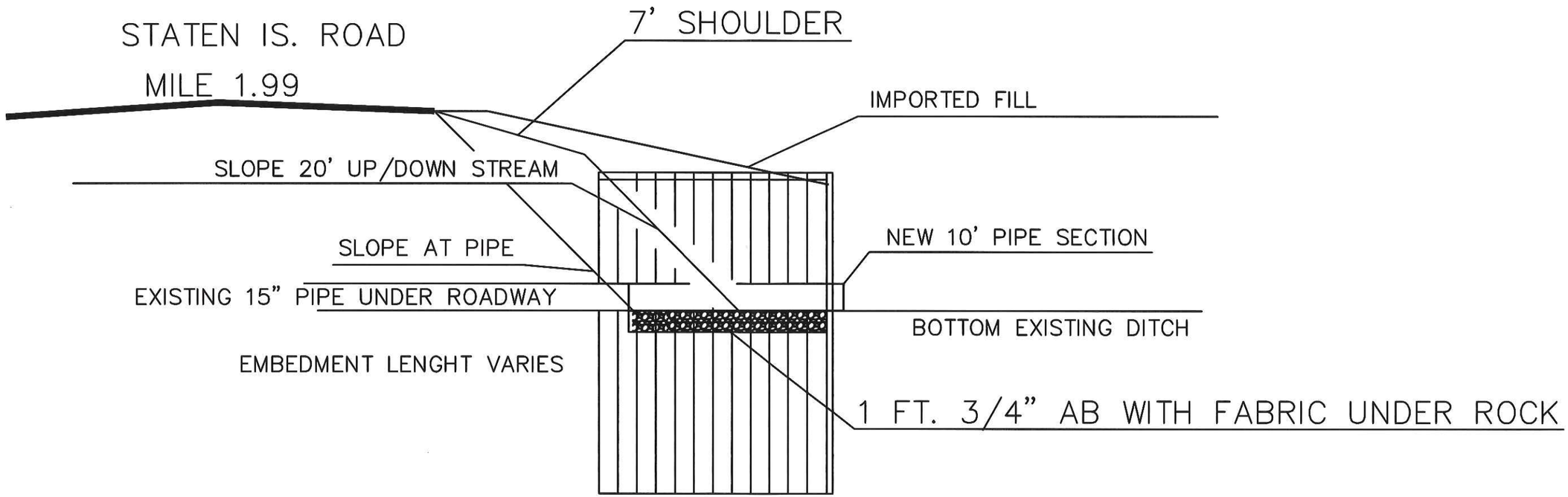

DATA REFERENCES:
1) VERTICAL DATUM: NAVD88 (NORTH AMERICAN VERTICAL DATUM OF 1988

ARCHITECT
Gilbert Labrie AIA
(916) 776-2277 Fax (916) 776-2282
P.O. BOX 183, WALNUT GROVE, CA 95690

DCC ENGINEERING CO., INC.
PLANNING
PERMITTING
ARCHITECTURE
CIVIL ENGINEERING
PROJECT MANAGEMENT
P.O. BOX 929, GROVE, CA 95690 TEL (916) 776-2277 FAX (916) 776-2282

DESIGNED BY: BEN N.
DRAWN BY: BEN E.
CHECK BY: GIL L.

SCALE: H: 1" = 5' V: 1" = 5'
ORIGINAL DRAWING SCALE 0" 1/2" 1"

REVISIONS

SYM	DESCRIPTION	DATE	BY	APRVD. BY
.	.	.	.	.

RECLAMATION DISTRICT 38 (STATEN ISLAND)
STATEN IS. ROAD
PIPE CROSSING IMPROVEMENT
STATEN ISLAND ROAD MILE 1.99
SIDE VIEW SHEET PILES

DATE: 09-15-15
SHEET NUMBER: C 2.7
PROJECT NUMBER: 7076.42

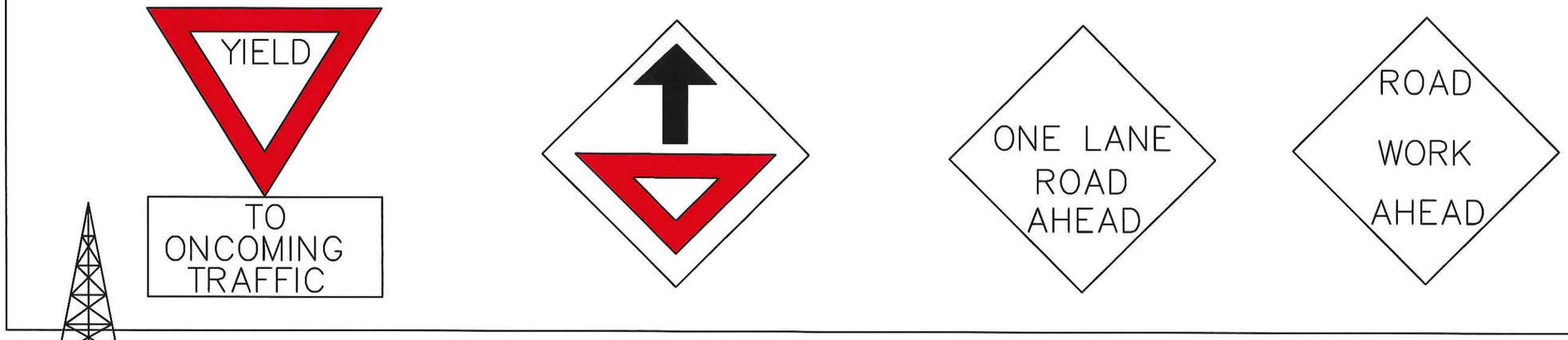

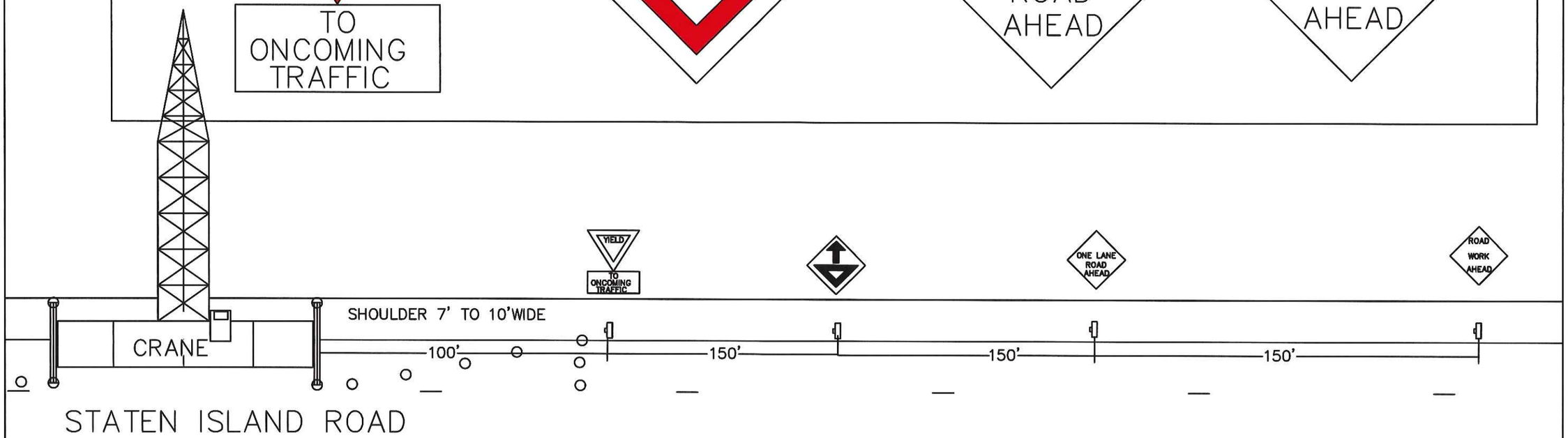

ELECTRICAL 5' OFF EP

FIGURE 6H–11, LANE CLOUSER ON TWO LANE RUAL ROAD
WITH LOW TRIFFIC VOLUMES
TYPICAL APPLICATION 11

DATA REFERENCES:
1) VERTICAL DATUM: NAVD88 (NORTH AMERICAN VERTICAL DATUM OF 1988

ARCHITECT
Gilbert Labrie AIA
(916) 776-2277 Fax (916) 776-2282
P.O. BOX 183, WALNUT GROVE, CA 95690

DCC ENGINEERING CO., INC.
PLANNING
PERMITTING
ARCHITECTURE
CIVIL ENGINEERING
PROJECT MANAGEMENT
P.O. BOX 929, GROVE, CA 95690 TEL (916) 776-2277 FAX (916) 776-2282

DESIGNED BY: NAME
DRAWN BY: NAME
CHECK BY: NAME

SCALE: H: 1"= 20' V: 1" = 20'
ORIGINAL DRAWING SCALE 0" 1/2" 1"

REVISIONS

SYM	DESCRIPTION	DATE	BY	APRVD. BY
.	.	.	.	.

RECLAMATION DISTRICT 38 (STATEN ISLAND)
STATEN ISLAND ROAD
PIPE CROSSING IMPROVEMENT
STATEN ISLAND ROAD; MILE 1.82,1.87,1.99
TRAFFIC CONTROL

DATE: 09-15-15
SHEET NUMBER: C3.0
PROJECT NUMBER: 7702.42

FIGURE 6H-11, LANE CLOUSER ON TWO LANE RUAL ROAD
WITH LOW TRIFFIC VOLUMES
TYPICAL APPLICATION 11

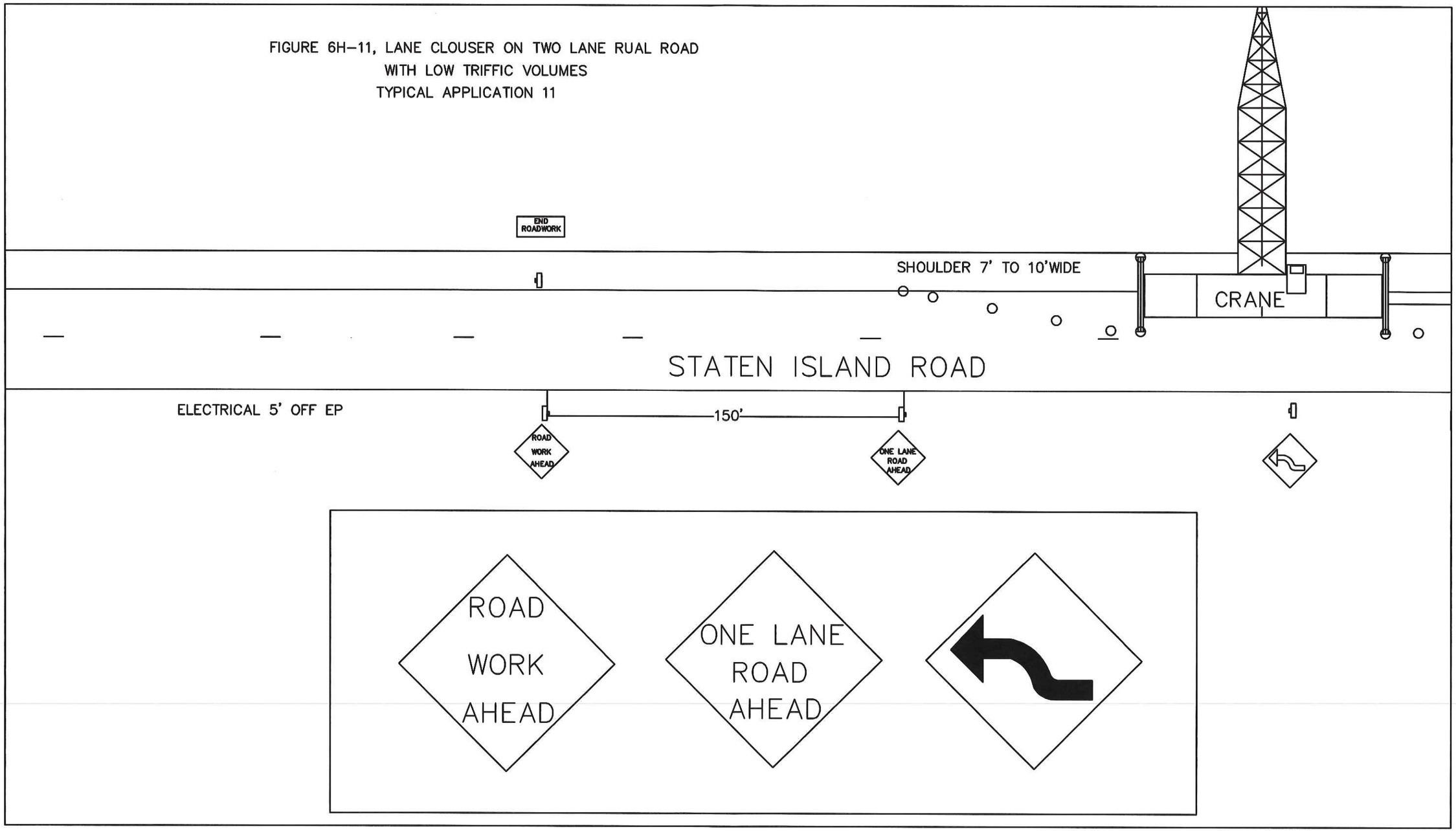

DATA REFERENCES:
1) VERTICAL DATUM: NAVD88 (NORTH AMERICAN VERTICAL DATUM OF 1988

ARCHITECT
Gilbert Labrie AIA
(916) 776-2277 Fax (916) 776-2282
P.O. BOX 183, WALNUT GROVE, CA 95690

DCC ENGINEERING CO., INC.
PLANNING
PERMITTING
ARCHITECTURE
CIVIL ENGINEERING
PROJECT MANAGEMENT
P.O. BOX 929, GROVE, CA 95690 TEL (916) 776-2277 FAX (916) 776-2282

DESIGNED BY: BEN
DRAWN BY: BEN
CHECK BY: BEN

SCALE: H: 1"= 5' V: 1" = 5'
ORIGINAL DRAWING SCALE 0" 1/2" 1"

REVISIONS				
SYM	DESCRIPTION	DATE	BY	APRVD. BY
.	.	.	.	.

RECLAMATION DISTRICT 38 (STATEN ISLAND)
STATEN IS. ROAD
PIPE CROSSING IMPROVMENT
STATEN ISLAND ROAD; MILE 1.82,1.87,1.99
SEC. A-A & B-B

DATE: 09-15-15
SHEET NUMBER: C3.1
PROJECT NUMBER: 7076.42