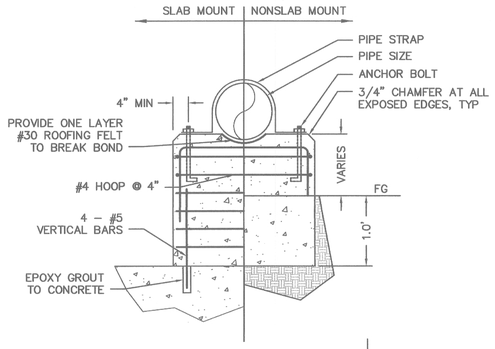

PIPE DIA	PIPE STRAP	ANCHOR BOLT DIA	PEDESTAL THICKNESS
6"–12"	1/4" X 2"	1/2"	12"
14"–24"	3/8" X 2–1/2"	5/8"	16"
30"–48"	1/2" X 3"	3/4"	24"

PIPE SUPPORT DETAIL

NOT TO SCALE

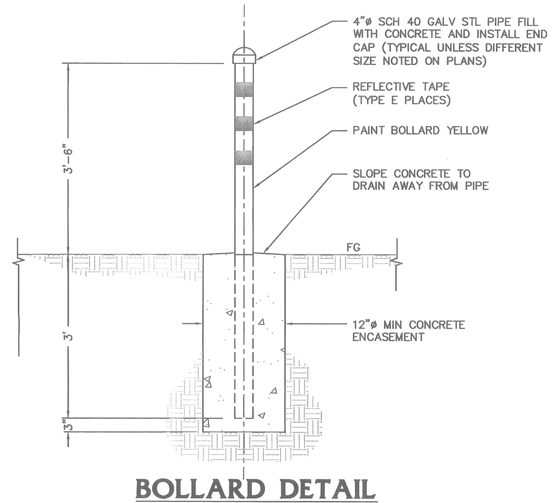

BOLLARD DETAIL

NOT TO SCALE

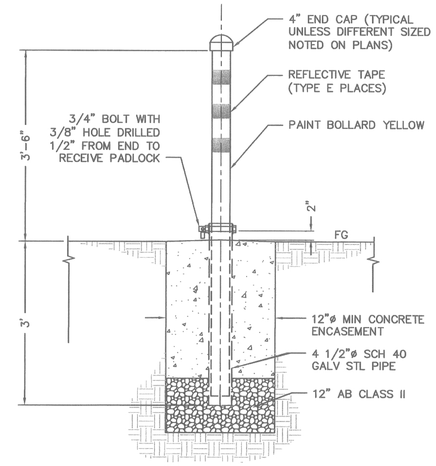

REMOVABLE BOLLARD DETAIL

NOT TO SCALE

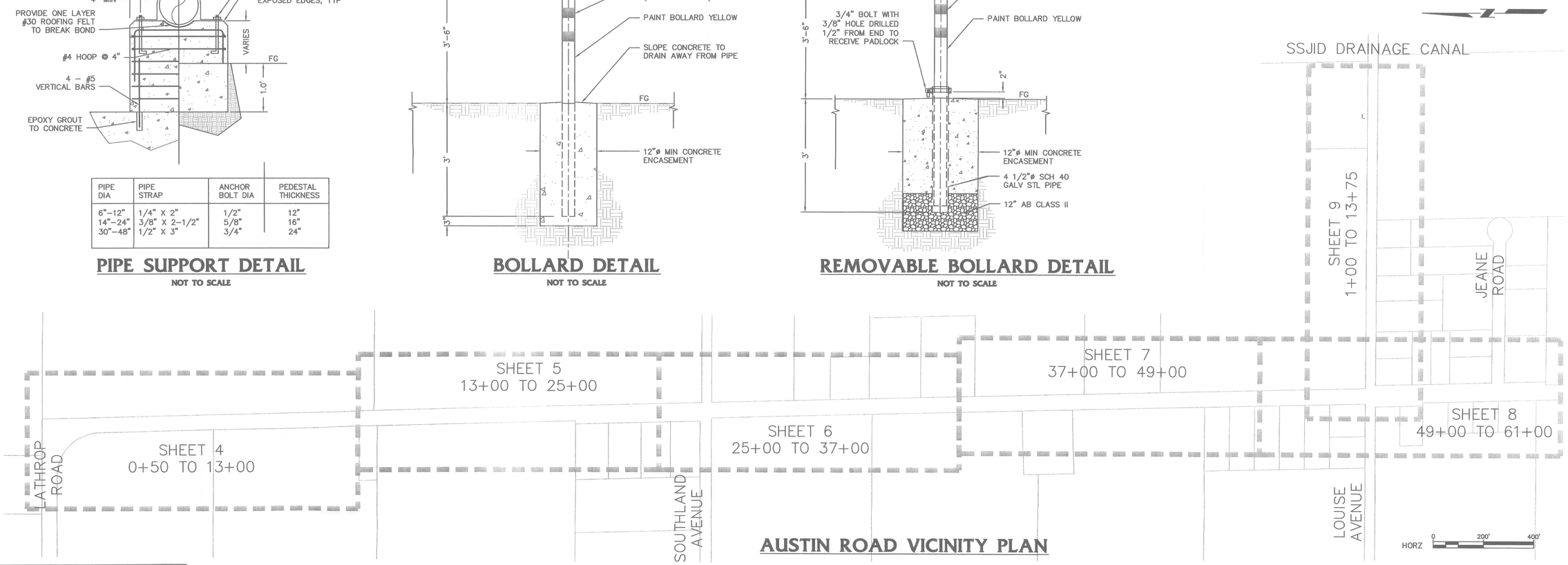

AUSTIN ROAD VICINITY PLAN

WARNING CAUTION

EXISTING UNDERGROUND UTILITIES CONTACT: UNDERGROUND SERVICE ALERT PHONE: (800) 642–2444 FOR MARKING PRIOR TO DIGGING

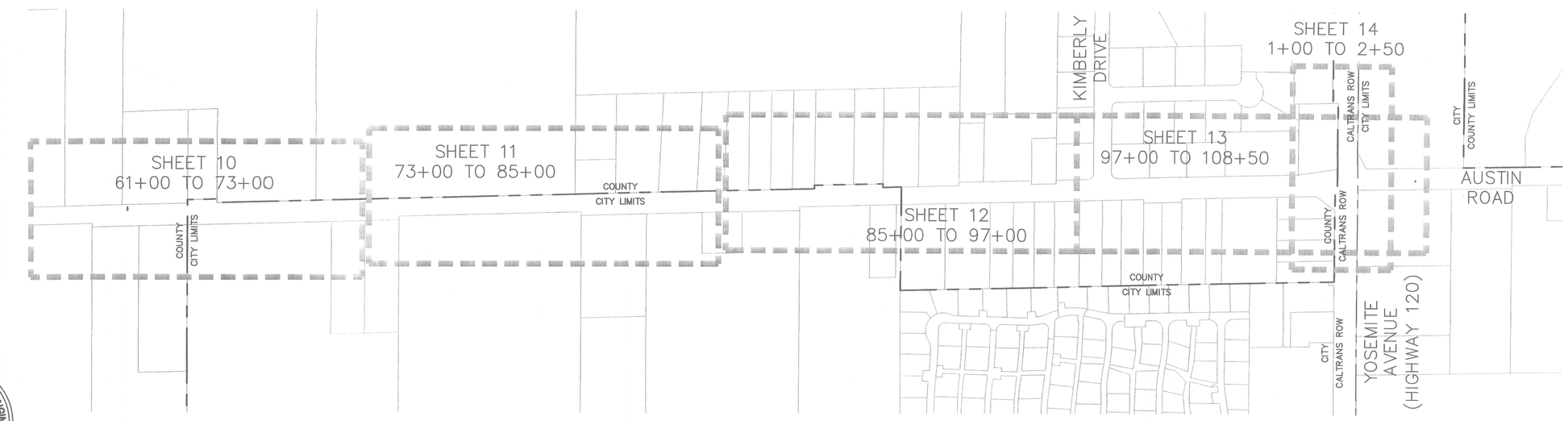

AUSTIN ROAD VICINITY PLAN

REGISTERED PROFESSIONAL ENGINEER FERNANDO ULLOA No. 62736 EXP. 6-30-10 CIVIL STATE OF CALIFORNIA

THE CITY OF MANTECA SHALL NOT BE RESPONSIBLE FOR THE ACCURACY OR COMPLETENESS OF ELECTRONIC COPIES OF THIS PLAN SHEET.

REVISIONS

APPROVED

8/27/09 DATE — FERNANDO ULLOA RCE 62736

CITY OF MANTECA

DEPARTMENT OF PUBLIC WORKS

1001 WEST CENTER STREET, MANTECA, CALIFORNIA 95337

SCALE	AS SHOWN
DESIGNED	FU
DRAWN	AM
CHECKED	KC
DATE	MAY 2009

TITLE

AUSTIN ROAD WATER MAIN PROJECT
AUSTIN ROAD VICINITY PLAN

SHEET 3 OF 14 SHEETS