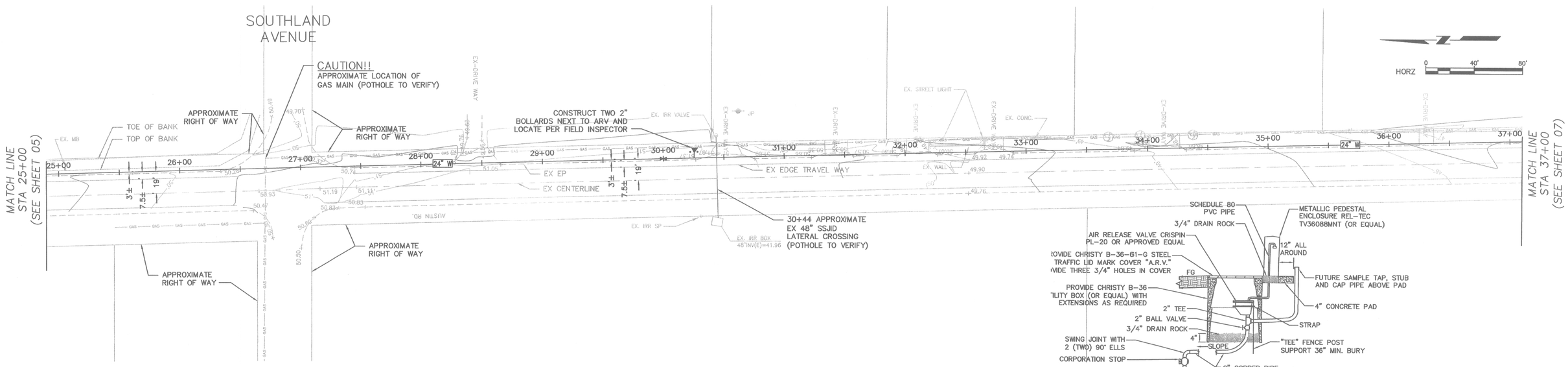

WARNING CAUTION

EXISTING UNDERGROUND UTILITIES
CONTACT: UNDERGROUND SERVICE
ALERT PHONE: (800) 642-2444
FOR MARKING PRIOR TO DIGGING

AUSTIN ROAD PLAN

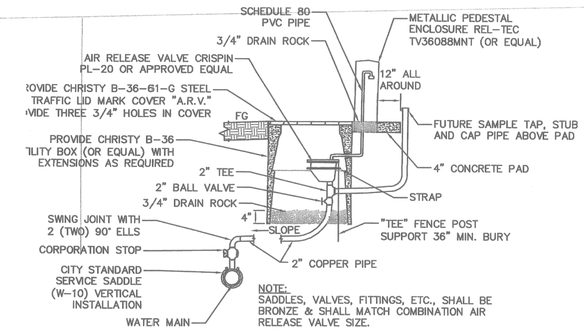

MODIFIED AIR RELEASE VALVE

NOT TO SCALE

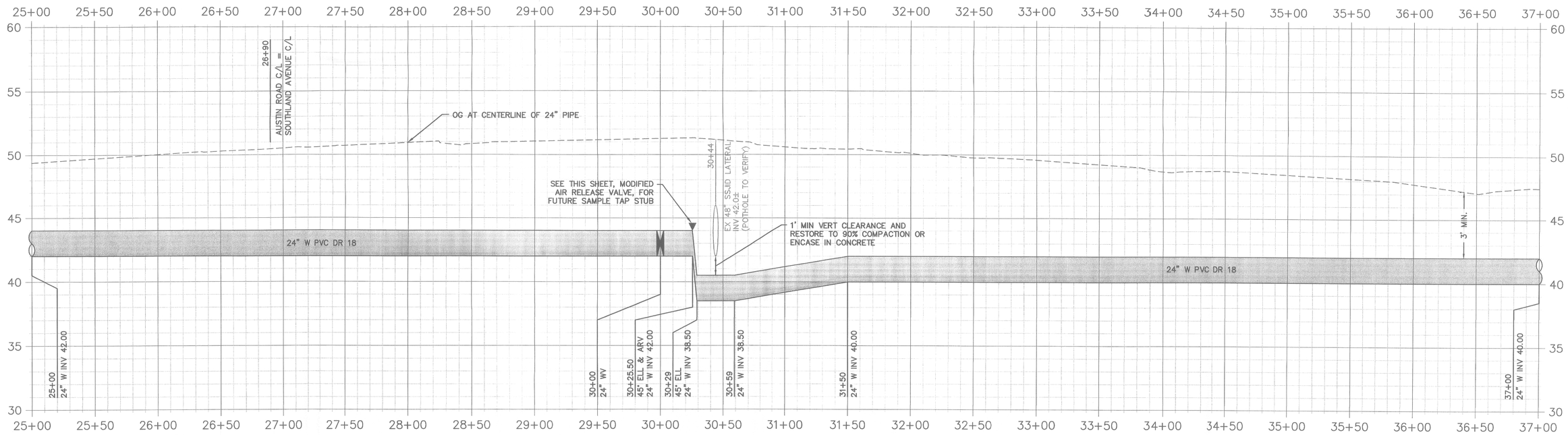

AUSTIN ROAD PROFILE

VERT 0 4' 8'
HORZ 0 40' 80'

REGISTERED PROFESSIONAL ENGINEER FERNANDO ULLOA No. 62736 EXP. 6-30-10 CIVIL STATE OF CALIFORNIA

THE CITY OF MANTECA SHALL NOT BE RESPONSIBLE FOR THE ACCURACY OR COMPLETENESS OF ELECTRONIC COPIES OF THIS PLAN SHEET.

REVISIONS

APPROVED

8/27/09 DATE — FERNANDO ULLOA RCE 62736

CITY OF MANTECA, CALIFORNIA — Manteca the family city — INCORPORATED MAY 24, 1918

CITY OF MANTECA
DEPARTMENT OF PUBLIC WORKS
1001 WEST CENTER STREET, MANTECA, CALIFORNIA 95337

SCALE	AS SHOWN
DESIGNED	FU
DRAWN	AM
CHECKED	KC
DATE	MAY 2009

TITLE: AUSTIN ROAD WATER MAIN PROJECT PLAN AND PROFILE 25+00 TO 37+00

SHEET 6 OF 14 SHEETS