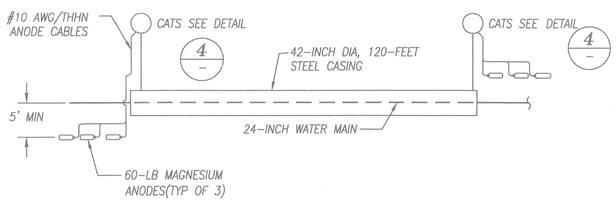

1 SITE PLAN – SCHEMATIC FOR CASINGS
NOT TO SCALE

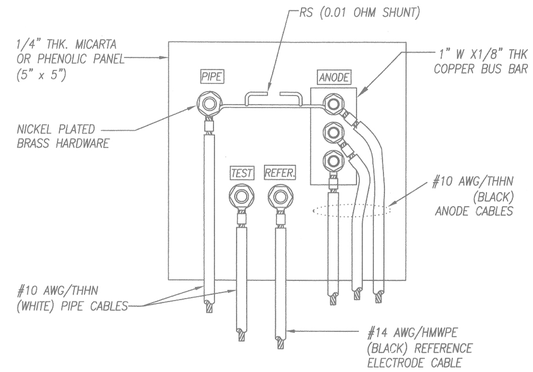

TERMINAL BOARD FOR
CORROSION TEST STATION

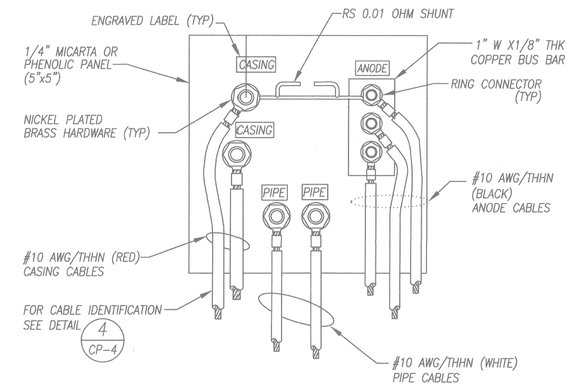

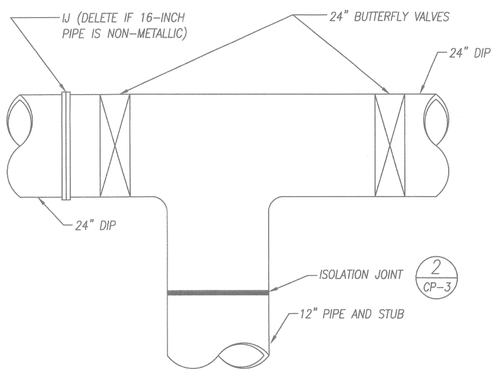

2 TEE – 12-INCH X 24-INCH X 24-INCH
NOT TO SCALE

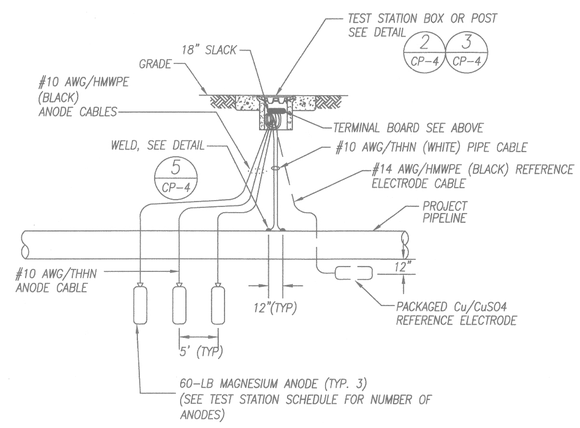

3 ATS – ANODE TEST STATION
NOT TO SCALE

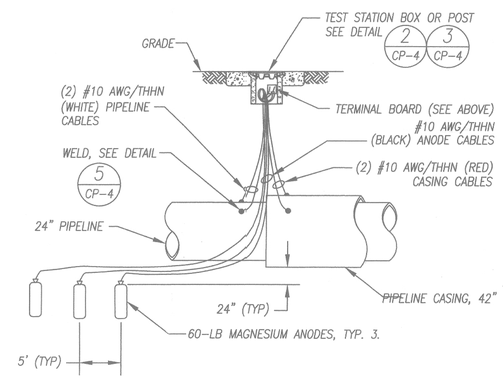

NOTES:

1) CASING MUST BE ELECTRICALLY ISOLATED FROM THE METALLIC PIPELINE USING APPROPRIATE INSULATORS AND END SLEEVES.
2) SEE TEST STATION SCHEDULE ON SHEET CP-1 FOR NUMBER OF ANODES AT EACH CATS.

4 CATS – CASING TEST STATION (WITH ANODES)
NOT TO SCALE

REGISTERED PROFESSIONAL ENGINEER
IAN MATHER
CR1141
Expires 3/31/09
CORROSION
STATE OF CALIFORNIA

CA: 1-800-227-2600
CALL BEFORE YOU DIG
USA
UNDERGROUND SERVICE ALERT
CA: 1-800-227-2600
CALL TWO WORKING DAYS BEFORE YOU DIG

corrpro®
2799 MILLER STREET, SAN LEANDRO, CA 94577
PH: (510)614-8800 FAX: (510)614-8811
FILE NAME: 572-5152 KIER & WRIGHT

KIER & WRIGHT
CIVIL ENGINEERS & SURVEYORS, INC.
1233 Quarry Lane, Suite 145 (925) 249-6555
Pleasanton, California 94566 Fax (925) 249-6563

IMPROVEMENT PLANS
EAST MARIPOSA ROAD WATERLINE
CORROSION CONTROL PLANS

DEPARTMENT OF PUBLIC WORKS
CITY OF STOCKTON, CALIFORNIA

REVISION NO.		DATE	BY	APPROVED

SCALE:	NONE
DESIGNED BY:	D.H.
DRAWN BY:	C.J.
CHECKED BY:	I.M.
RECORD DWG:	

APPROVED BY: DATE: 11/21/08
CITY ENGINEER
STOCKTON, CALIFORNIA

SHEET NO.
CP-2
OF 19 SHEETS
PROJECT NO.
A07567

5085.16C