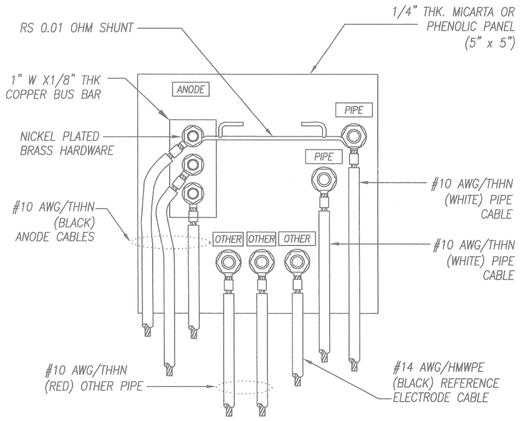


TERMINAL BOARD FOR DIELECTRIC ISOLATING JOINT TEST STATION

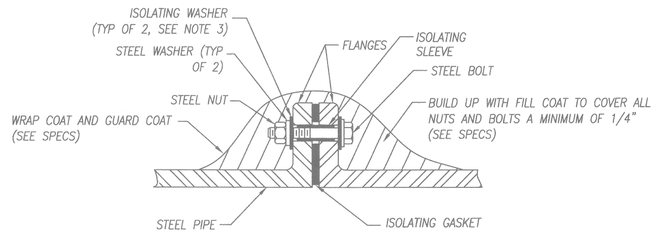


NOTES:
1. GASKET SHALL BE FOR WATER SERVICE AND BE OF SAME PRESSURE RATING AS THE FLANGE.
2. DELETE COATING IF FLANGE IS LOCATED ABOVE GRADE OR IN VAULTS.
3. DELETE ISOLATING WASHER ON THE SIDE OF THE FLANGE THAT IS UNDER CATHODIC PROTECTION. IF BOTH SIDES ARE PROTECTED, DELETE ISOLATING WASHERS ON ONE SIDE.

BELOW GRADE ISOLATING JOINT COATING

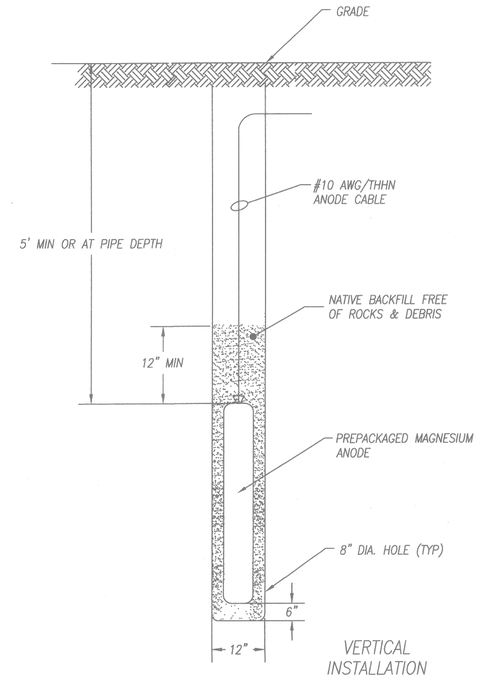


VERTICAL INSTALLATION

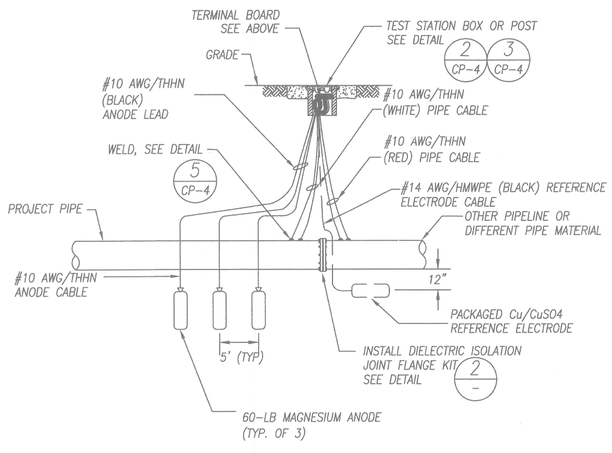


1 IJTS – DIELECTRIC ISOLATING JOINT TEST STATION
NOT TO SCALE

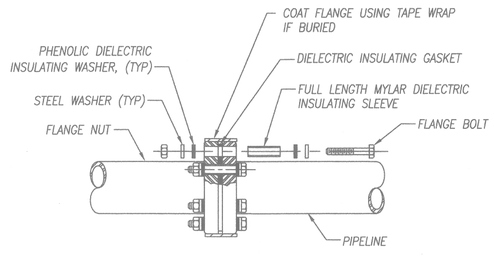


ABOVE GRADE ISOLATING JOINT

2 IJ – DIELECTRIC ISOLATING JOINT FLANGE KIT
NOT TO SCALE

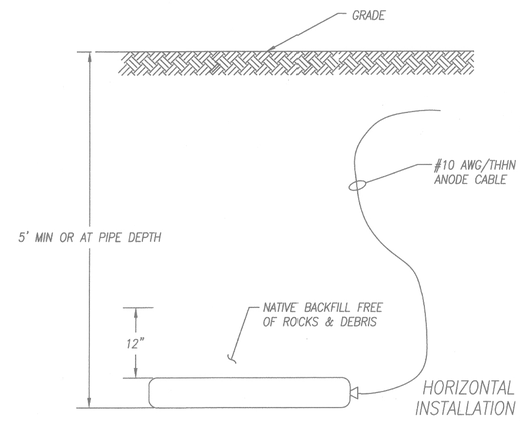


HORIZONTAL INSTALLATION

3 MAGNESIUM ANODE INSTALLATION
NOT TO SCALE

REGISTERED PROFESSIONAL ENGINEER
IAN MATHER
CR1141
Expires 3/31/09
CORROSION
STATE OF CALIFORNIA

CA: 1-800-227-2600
CALL BEFORE YOU DIG
USA
UNDERGROUND SERVICE ALERT
CA: 1-800-227-2600
CALL TWO WORKING DAYS BEFORE YOU DIG


corrpro®
2799 MILLER STREET, SAN LEANDRO, CA 94577
PH: (510)614-8800 FAX: (510)614-8811
FILE NAME: 572-5152 KIER & WRIGHT

KIER & WRIGHT
CIVIL ENGINEERS & SURVEYORS, INC.
1233 Quarry Lane, Suite 145 (925) 249-6555
Pleasanton, California 94566 Fax (925) 249-6563


IMPROVEMENT PLANS
EAST MARIPOSA ROAD WATERLINE

CORROSION CONTROL PLANS

DEPARTMENT OF PUBLIC WORKS
CITY OF STOCKTON, CALIFORNIA

| BY | APPROVED |
|---|---|
| | |
| | |
| | |
| | |

| | | | |
|---|---|---|---|
| SCALE: | NONE | APPROVED BY: DATE: 11/21/08 | SHEET NO. CP-3 OF 19 SHEETS |
| DESIGNED BY: | D.H. | CITY ENGINEER STOCKTON, CALIFORNIA | PROJECT NO. A07567 |
| DRAWN BY: | C.J. | | |
| CHECKED BY: | I.M. | | |
| RECORD DWG: | | | |

5085.17C