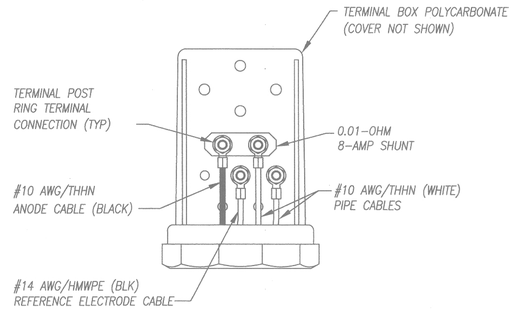

1 / – POST-MOUNTED TERMINAL BOARD (TYP)
NOT TO SCALE

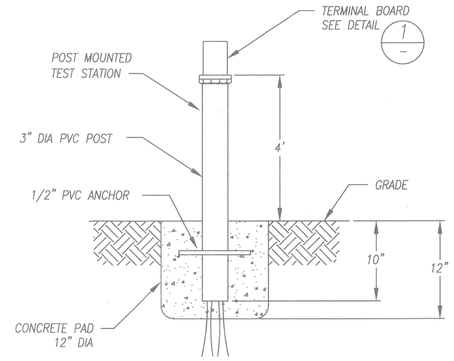

2 / – POST MOUNTED TEST STATION (UNPAVED AREAS)
NOT TO SCALE

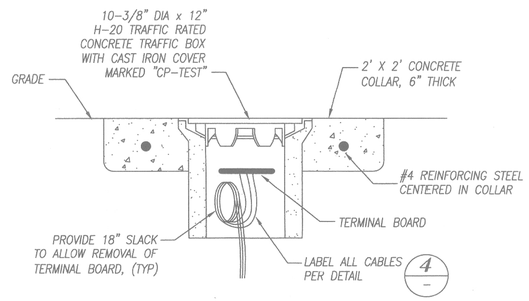

3 / – CONCRETE TRAFFIC BOX (PAVED AREAS)
NOT TO SCALE

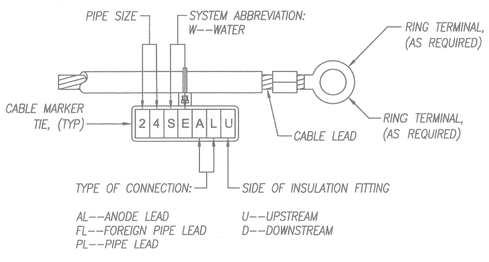

4 / – CABLE IDENTIFICATION
NOT TO SCALE

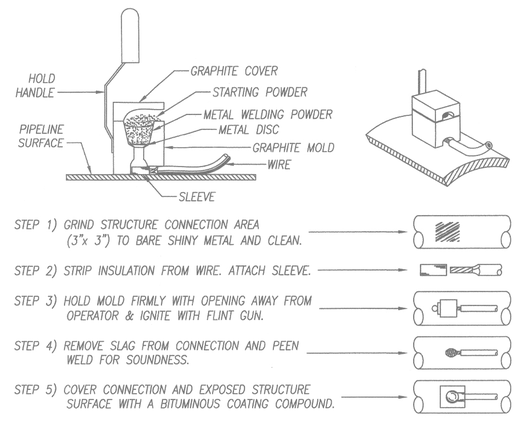

NOTE: PROCEDURE SHOWN ABOVE IS TO BE USED AS A GENERAL GUIDE ONLY. CONSULT MANUFACTURER'S LITERATURE FOR SPECIFIC INSTALLATION INSTRUCTIONS.

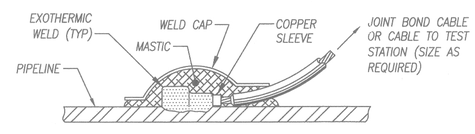

5 / – EXOTHERMIC WELDING
NOT TO SCALE

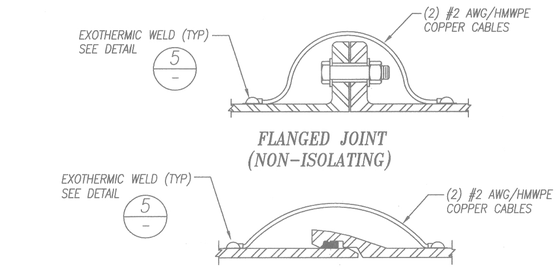

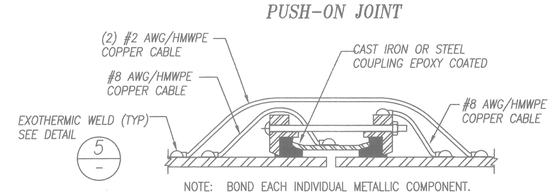

NOTE: BOND EACH INDIVIDUAL METALLIC COMPONENT.

FLEXIBLE COUPLING
(MULTIPLE COMPONENT COUPLING)

NOTES:
1. ANY NON-WELDED, NON-ISOLATING JOINTS, VALVES & FITTINGS REQUIRE BONDING TO ACHIEVE ELECTRICAL CONTINUITY.
2. USE ONE BOND CABLE ONLY PER JOINT FOR PIPE SIZES 8" DIA OR SMALLER.

6 / – JOINT BONDING JUMPER INSTALLATION
NOT TO SCALE

REGISTERED PROFESSIONAL ENGINEER
IAN MATHEW
CR1141
Expires 3/31/09
CORROSION
STATE OF CALIFORNIA

corrpro®
2799 MILLER STREET, SAN LEANDRO, CA 94577
PH: (510)614-8800 FAX: (510)614-8811
FILE NAME: 572-5152 KIER & WRIGHT

KIER & WRIGHT
CIVIL ENGINEERS & SURVEYORS, INC.
1233 Quarry Lane, Suite 145 (925) 249-6555
Pleasanton, California 94566 Fax (925) 249-6563

CA: 1-800-227-2600
CALL BEFORE YOU DIG
USA
UNDERGROUND SERVICE ALERT
CA: 1-800-227-2600
CALL TWO WORKING DAYS BEFORE YOU DIG

IMPROVEMENT PLANS
EAST MARIPOSA ROAD WATERLINE
CORROSION CONTROL PLANS

DEPARTMENT OF PUBLIC WORKS
CITY OF STOCKTON, CALIFORNIA

BY	APPROVED

SCALE:	NONE	APPROVED BY: DATE: 11/21/08	SHEET NO. CP-4 OF 19 SHEETS
DESIGNED BY:	D.H.	CITY ENGINEER STOCKTON, CALIFORNIA	PROJECT NO. A07567
DRAWN BY:	C.J.		
CHECKED BY:	I.M.		
RECORD DWG:			

5085.18C