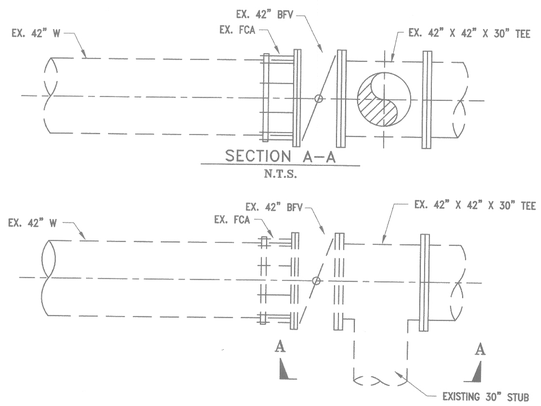

EXISTING 42" WATER MAIN & 30" STUB (1)

N.T.S.

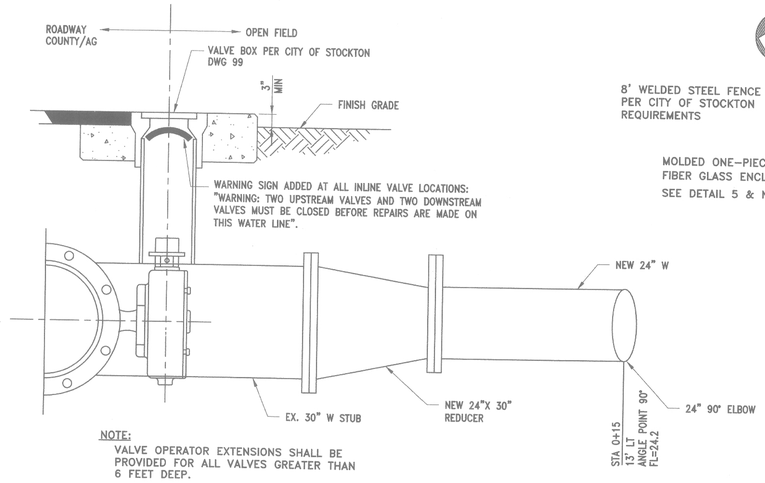

NOTE:
VALVE OPERATOR EXTENSIONS SHALL BE PROVIDED FOR ALL VALVES GREATER THAN 6 FEET DEEP.

CONNECTION TO EXISTING 30" (4)

NTS

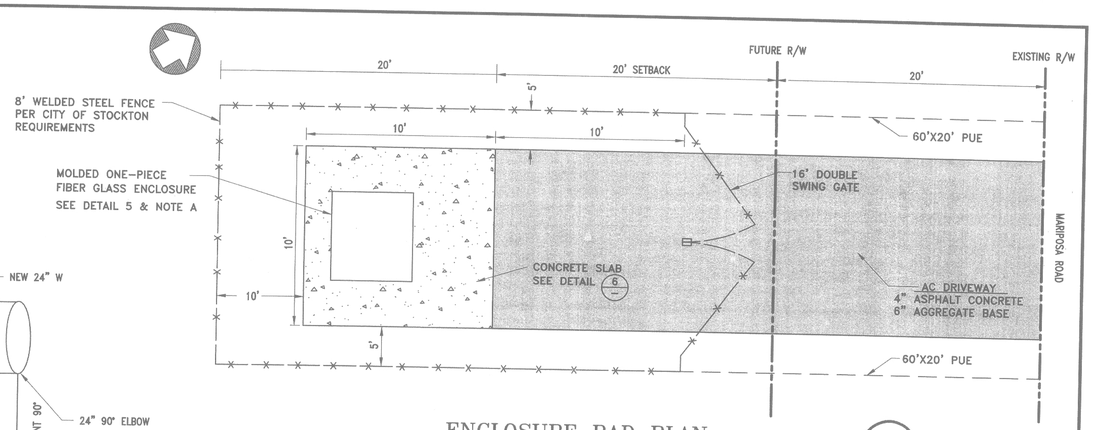

ENCLOSURE PAD PLAN (7)

NTS

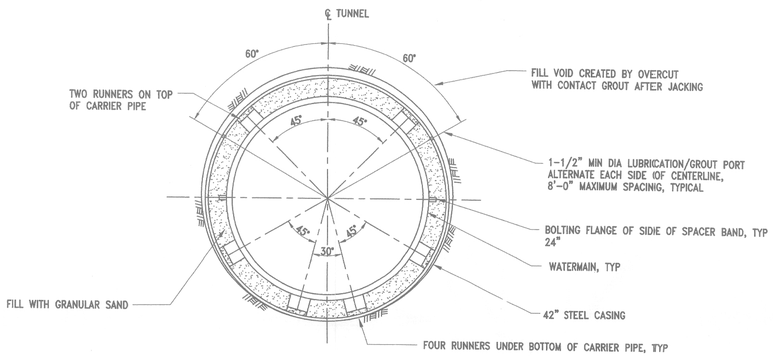

TYPICAL PIPE JACKING SECTION FOR WATERMAIN CASINGS
SECTION B–B
N.T.S.

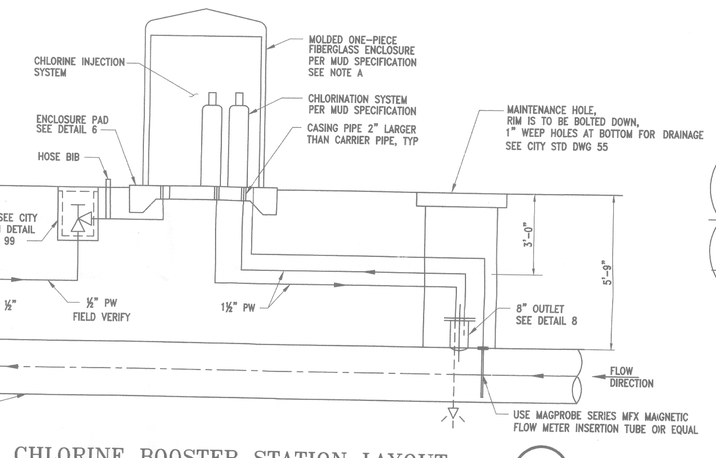

CHLORINE BOOSTER STATION LAYOUT (5)

NTS

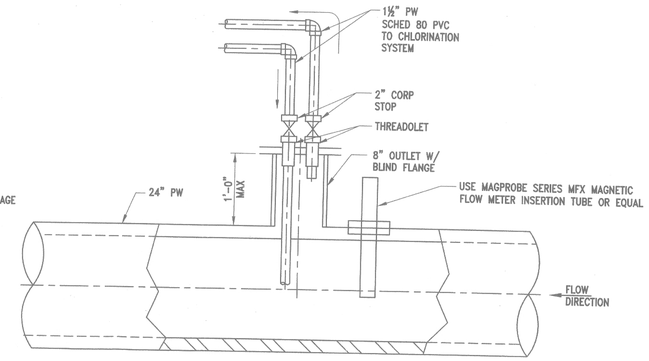

OUTLET DETAIL (8)

NTS

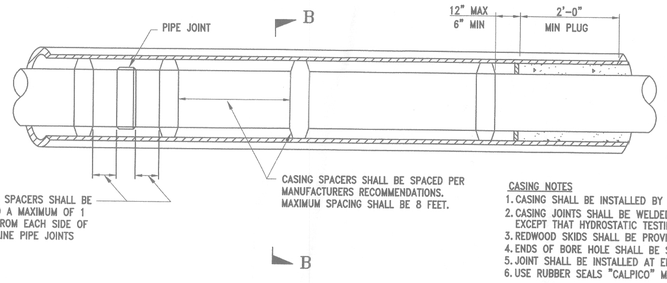

CASING NOTES
1. CASING SHALL BE INSTALLED BY THE JACKING AND BORING METHOD.
2. CASING JOINTS SHALL BE WELDED IN ACCORDANCE WITH AWWA STANDARD C-206 EXCEPT THAT HYDROSTATIC TESTING WILL NOT BE REQUIRED.
3. REDWOOD SKIDS SHALL BE PROVIDED AS PER STEEL CASING SCHEDULE DWG 60A.
4. ENDS OF BORE HOLE SHALL BE SEALED TO PREVENT ENTRANCE OF FILL MATERIAL, AS REQUIRED.
5. JOINT SHALL BE INSTALLED AT END OF CASING PIPE. SEE DETAIL.
6. USE RUBBER SEALS "CALPICO" MODEL PER CITY STDS DWG 60 & 60A.

STEEL CASING AND CASING SPACER DETAIL (2)

NTS

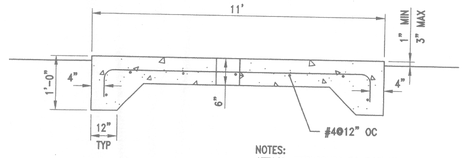

NOTES:
ATTACH ENCLOSURE TO PAD PER MANUFACTURER'S RECOMMENDATION.

ENCLOSURE PAD DETAIL (6)

NTS

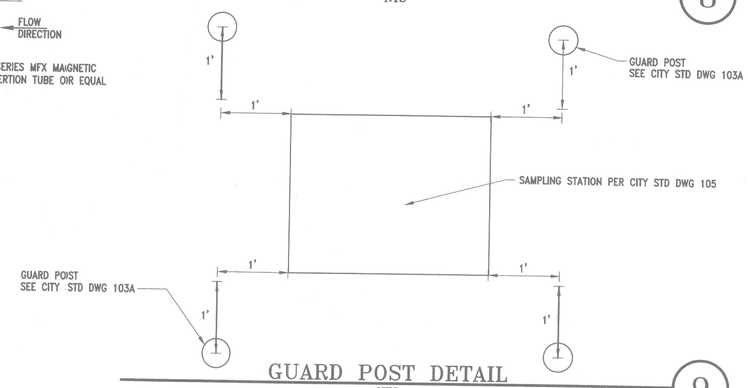

GUARD POST DETAIL (9)

NTS

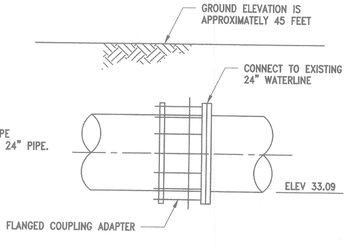

NOTES:
1. CONTRACTOR TO VERIFY TYPE OF CONNECTION FEASIBLE AT 24" PIPE.

24" WATERMAIN CONNECTION DETAIL (3)

N.T.S.

NOTE A:

CONTRACTOR TO PROVIDE SHOP DRAWING SUBMITTAL INCLUDING WIRING DIAGRAM PRIOR TO ANY INSTALLATION OF THE CHLORINE BOOSTER PUMP STATION WHICH INCLUDES THE FOLLOWING:

- 54"X60" FIBERGLASS BUILDING WITH LIGHTING BY ENGINEERING FIBERGLASS COMPOSITES, INC.
- INTAKE FAN
- HOA SWITCH
- EXHAUST FAN
- HEATER
- NEMA 4x ENCLOSURE FOR BEAKER PANELS CAPITAL CONTROLS GAS FEEDER SERIES 200 INCLUDING
- AUTO SWITCHOVER CONTROLS
- CAPITAL CONTROLS SERIES EJ 100 EJECTOR WITH NOZZLE NO.15
- SEVERN TRENT CHLORINE GAS DETECTOR WITH 4-20mA OUTPUT
- SCALETRON INDUSTRIES LTD. ELECTRONIC DUAL-PLATFORM CYLINDER SCALE WITH 4-20mA OUTPUT
- NEMA 4X36X30X10 ENCLOSURE WITH LOUVERED CUT OUT FORCED AIR VENTILATION WITH 24V POWER(SCADA CONTROL PANEL)
- DOOR CONTACTS/INTRUSION ALARM WITH 4-20mA OUTPUT
- INSERTION TUBE FLOWMETER
- INSERTION TUBE FLOWMETER DISPLAY WITH 4-20mA OUTPUT
- ZERO FLOW SHUTOFF FOR BOOSTER STATION
- SCHEDULE 80 PVC PIPING TO AND FROM WATER MAIN
- CORP STOP VALVES WITH PVC DIFFUSER TUBES TO REACH CENTER OF MAIN
- TERMINATE AND LABEL ALL 4-20mA OUTPUTS AT SCADA CONTROL PANEL
- ALL TUBING CONNECTIONS AND APPURTENANCES TO HAVE A FULLY FUNCTIONAL CHLORINE INJECTION STATION
- USE MAGPROBE SERIES MFX MAGNETIC FLOW METER INSERTION TUBE OR EQUAL

NOTE B:

SEE PLAN & PROFILE SHEETS FOR RESTRAINING JOINT LENGTH

REGISTERED PROFESSIONAL ENGINEER
CHARLES R. MCCALLUM
No. 38[illegible]
Exp. 6-30-09
CIVIL
STATE OF CALIFORNIA

CA: 1-800-227-2600
CALL BEFORE YOU DIG
USA
UNDERGROUND SERVICE ALERT
CA: 1-800-227-2600
CALL TWO WORKING DAYS BEFORE YOU DIG

KIER & WRIGHT
CIVIL ENGINEERS & SURVEYORS, INC.
1233 Quarry Lane, Suite 145
Pleasanton, California 94566
(925) 249-6555
Fax (925) 249-6563

IMPROVEMENT PLANS
EAST MARIPOSA ROAD WATERLINE
DETAILS

DEPARTMENT OF PUBLIC WORKS
CITY OF STOCKTON, CALIFORNIA

REVISION NO.		DATE	BY	APPROVED

SCALE:	AS SHOWN
DESIGNED BY:	CM
DRAWN BY:	CFJ
CHECKED BY:	CM
RECORD DWG:	

APPROVED BY: DRAWN DATE: 11/21/08
CITY ENGINEER
STOCKTON, CALIFORNIA

SHEET NO. C3 OF 19 SHEETS.
PROJECT NO. A07567

5085.2C

Z:\2007\A07567\OFFSITE PLANS\A07567-ST-IMP.dwg 11/17/2008 9:21:07 AM PST