PS-09-276

GENERAL NOTES:

1. CONTRACTOR SHALL BECOME FAMILIAR WITH PROJECT SURROUNDINGS, WORKING CONDITIONS, AND SITE LIMITATIONS AND WILL INCLUDE ALLOWANCES IN THEIR BID TO COVER ANY PROJECT CONSTRAINTS.
2. CONTRACTOR SHALL BE RESPONSIBLE FOR ADHERING TO AND COMPLYING WITH LOCAL GOVERNING AGENCY PERMIT RESTRICTIONS, WHICH MAY AFFECT ALLOWABLE WORKING HOURS AND NOISE LEVELS.
3. CONTRACTOR SHALL PROVIDE TRAFFIC CONTROL AS REQUIRED BY APPLICABLE LOCAL GOVERNING AGENCY. CONTRACTOR SHALL SUBMIT A TRAFFIC CONTROL PLAN PER CALTRANS STANDARDS TO OWNER PRIOR TO CONSTRUCTION, IF REQUIRED. WORK REQUIRING TRAFFIC CONTROL SHALL BE CONDUCTED BETWEEN THE HOURS OF 9:00 A.M. AND 3:30 P.M., MONDAY THRU FRIDAY, OR AS OTHERWISE AUTHORIZED BY LOCAL GOVERNING AGENCY REPRESENTATIVE.
4. CONTRACTOR SHALL APPLY CALIFORNIA STORMWATER QUALITY ASSOCIATION (CASQA) BEST MANAGEMENT PRACTICES TO PREVENT WATER AND SEDIMENT FROM ENTERING NAVIGABLE WATERWAYS. THE CONTRACTOR IS RESPONSIBLE FOR IDENTIFYING AND INSTALLING THE APPLICABLE AND APPROPRIATE BMP's IDENTIFIED IN THE CASQA – STORMWATER BEST MANAGEMENT PRACTICES HANDBOOK AVAILABLE ONLINE AT WWW.CABMPHANDBOOKS.COM. SOME OF THE REQUIRED PRACTICES MAY OR MAY NOT BE SHOWN ON THIS SITE PLAN.
5. CONTRACTOR TO CONTACT "UNDERGROUND SERVICES ALERT" 48 HOURS PRIOR TO ANY EXCAVATION.
6. IT SHALL BE THE RESPONSIBILITY OF THE CONTRACTOR TO VERIFY THE EXACT LOCATION AND DEPTH OF ALL EXISTING UTILITIES.
7. TRENCH TO BE SHORED IN ACCORDANCE WITH CALIFORNIA OSHA REGULATIONS.
8. PLACE A CONTINUOUS WIRE AND STRIP OF DETECTOR TAPE OVER ALL PIPES AND EXTEND UP INTO ALL VALVE BOXES. TRACER WIRE IS REQUIRED ON ALL PIPE. (SEE LATEST REVISION OF DRAWING CW-850).
9. SEE LATEST REVISION OF DRAWING CW-435 FOR TYPICAL THRUST BLOCK INSTALLATION.
10. FACILITIES SEPARATION:
    - A) WATER MAIN SHALL BE INSTALLED AT LEAST 10 FEET HORIZONTALLY FROM AND ONE FOOT VERTICALLY ABOVE ANY PARALLEL PIPELINE CONVEYING SEWAGE (UNTREATED, PRIMARY, OR SECONDARY), DISINFECTED SECONDARY RECYCLED WATER, OR HAZARDOUS FLUIDS.
    - B) WATER MAIN SHALL BE INSTALLED AT LEAST 4 FEET HORIZONTALLY FROM AND ONE FOOT VERTICALLY ABOVE ANY PIPELINE CONVEYING TERTIARY RECYCLED WATER OR STORM DRAINAGE.
    - C) AT CROSSINGS, WATER MAIN SHALL BE CONSTRUCTED NO LESS THAN 45-DEGREES TO AND AT LEAST ONE FOOT VERTICALLY ABOVE ANY PIPELINES INDICATED IN A AND B ABOVE.
    - D) NO CONNECTION JOINTS SHALL BE MADE IN THE WATER MAIN WITHIN EIGHT (8) HORIZONTAL FEET OF CROSSING OF ANY PIPELINES INDICATED IN A AND B ABOVE.
    - E) WATER MAIN SHALL NOT BE INSTALLED WITHIN 100 HORIZONTAL FEET OF ANY SANITARY LANDFILL, WASTEWATER DISPOSAL POND, OR HAZARDOUS WASTE DISPOSAL SITE.
    - F) WATER MAIN SHALL NOT BE INSTALLED WITHIN 25 HORIZONTAL FEET OF ANY CESSPOOL, SEPTIC TANK, SEWAGE LEACH FIELD, SEEPAGE PIT, UNDERGROUND HAZARDOUS MATERIAL STORAGE TANK, OR GROUNDWATER RECHARGE PROJECT SITE.
11. WHEN ASSEMBLING A PVC C-900 PIPE TO AN IRON FITTING (PUSH-ON OR MECHANICAL JOINT). REMOVE ALL BUT 1/4 INCH OF THE FACTORY MADE BEVEL FROM THE SPIGOT END OF THE PIPE PRIOR TO INSTALLATION.
12. USE PVC 1°± DEFLECTION AND 5'± DEFLECTION WITH HIGH DEFLECTION CPLGS TO ACHIEVE PROPER RADIUS FOR CURVES. DO NOT DEFLECT PIPE AT FITTINGS.
13. VALVE CANS AND COVERS SHALL BE PLACED OVER ALL VALVES. COVERS SHALL BE SET TO EXISTING FINISHED GRADE AND RESET IF NECESSARY ONCE THE STREET IS AT FINAL GRADE. (SEE LATEST REVISION OF DRAWINGS CW-14 AND CW-439).
14. NO VALVE COVERS ARE TO LIE IN SIDEWALKS, CROSS GUTTER, CURB OR DRIVEWAYS. EACH SERVICE SHOULD ALSO BE LOCATED TO PROVIDE PROTECTION TO THE METER BOX FROM VEHICLE TRAFFIC AND PARKING.
15. PROTECT UNDERGROUND FLEXIBLE COUPLINGS, BARE STEEL, MJ x MJ SLEEVES, AND ALL BOLTS (INCLUDING STAINLESS STEEL) AS FOLLOWS:
    - A) THE ENTIRE AREA OF THE FITTING MUST BE DRY AND FREE OF DUST, DIRT, AND OTHER FOREIGN MATTER. RUST OR OTHER FOREIGN MATTER MUST BE REMOVED BY SCRAPING OR WIRE BRUSHING, WIPING WITH A DRY CLEAN CLOTH MAY BE NECESSARY TO REMOVE THE PARTICLES FROM BRUSH CLEANING. ANY OIL OR GREASE MUST BE REMOVED BY USING A LOW RESIDUE, VOLATILE PETROLEUM SOLVENT BEFORE APPLICATION OF GREASE AND WRAPPING.
    - B) THE EXPOSED AREA SHOULD BE COATED WITH A HEAVY COATING OF METALGUARD 301 GREASE BY THE GLOVE METHOD TO A THICKNESS OF AT LEAST 1/4".
    - C) FIRMLY WRAP THE ENTIRE GREASE AREA WITH ONE LAYER, HALF LAPPED OF A WOVEN GLASS FILAMENT MESH (RES OR BIT WRAP, 4" WIDE).
    - D) APPLY A SECOND LAYER OF METALGUARD 301 GREASE ON TOP OF THE GLASS FILAMENT BY THE GLOVE METHOD TO A THICKNESS OF AT LEAST 1/4".
    - E) FIRMLY WRAP THE ENTIRE GREASE AREA WITH A SECOND LAYER, HALF LAPPED OF THE WOVEN GLASS FILAMENT MESH.
    - F) COVER THE ENTIRE MESH WRAPPED AREA OF THE FITTING WITH A THIRD AND FINAL COATING AT LEAST 1/4" THICK OF METALGUARD 301 GREASE BY THE GLOVE METHOD.
    - G) FIRMLY APPLY 2 LAYERS OF POLYWRAP, HALF LAPPED OVER ALL AREAS OF THE COATED AND WRAPPED FITTING. BACKFILLING MAY FOLLOW IMMEDIATELY AFTER THIS WRAPPING.
16. TRENCH BACKFILL AND PAVING SHALL CONFORM TO TRENCH SECTION DETAILS AND ALL GOVERNING AGENCY REQUIREMENTS.
17. NEW PIPELINE SHALL BE INSTALLED WITH 4 FEET OF COVER, EXCEPT WHERE SPECIFIED.
18. CONTRACTOR SHALL LIMIT DAILY TRENCHING OPERATIONS TO THE LENGTH OF PIPE THAT CAN BE INSTALLED AND BACKFILLED THAT DAY.
19. THE NEW PIPELINE SHALL BE TESTED AT 150 PSI FOR A PERIOD OF 4 HOURS. SEE SPECIFICATIONS TO DETERMINE EXACT TESTING REQUIREMENTS.
20. TIE-INS TO BE MADE AT A TIME THAT IS CONVENIENT TO OWNER WHICH MAY BE AT NIGHTS OR WEEKENDS. THE ADDITIONAL COST DUE TO OVERTIME PAY SHALL BE AT OWNER'S EXPENSE.
21. CONTRACTOR SHALL PROVIDE MISC. MATERIAL REQUIRED TO COMPLETE THE TIE-IN SUCH AS, BUT NOT LIMITED TO:
22. CONTRACTOR SHALL PROVIDE MISC. MATERIAL REQUIRED TO COMPLETE THE TIE-IN SUCH AS, BUT NOT LIMITED TO:
    PROTECTION COATING MATERIAL FOR PIPE AND FITTINGS, LINEGUARD TAPE, CONCRETE FOR THRUST BLOCKS, EMBEDMENT BACKFILL AROUND AND OVER THE PIPE, FINAL BACKFILL TO MEET COMPACTION REQUIREMENTS, AND PAVEMENT REPLACEMENT.
23. CONTRACTOR SHALL BE RESPONSIBLE TO ABANDON ALL PIPE ENDS BY PLUGGING WITH BRICK AND MORTAR. ABANDON ALL GATE VALVES BY REMOVING COVER, CUT CASING DOWN TO SUBGRADE, AND BACKFILL VALVE CASING WITH CONCRETE SLURRY TO REMOVE VOIDS. REPLACE BASE ROCK AND PERMANENT PAVEMENT AS NECESSARY. WHEN REMOVING EXISTING FITTINGS CONTRACTOR SHALL ALSO REMOVE EXISTING CONCRETE THRUST BLOCK.
24. CONTRACTOR SHALL RESTORE LAWN, GUTTER, PAVEMENT, BERM, AND CURB TO MATCH EXISTING PER GOVERNING AGENCY'S STANDARDS.
25. SPOILS SHALL NOT REMAIN ON-SITE. DISPOSAL OF ALL PROJECT GENERATED SPOILS SHALL BE AT A FACILITY LICENSED AND CLASSIFIED TO ACCEPT THE MATERIALS. CONTRACTOR TO PROVIDE OWNER WITH A FORMAL RECEIPT FROM THE ACCEPTING FACILITY. ALL MATERIALS THAT WILL REQUIRE TESTING PRIOR TO DISPOSAL SHALL BE SAMPLED AND TESTED IN ACCORDANCE WITH THE REQUIREMENTS OF THE DISPOSAL FACILITY IN ADVANCE OF THE NEED FOR DISPOSAL.
26. THE LIST OF MATERIALS FOR THIS PROJECT IS FOR CWS CO. ESTIMATING AND REFERENCE PURPOSES ONLY, AND IS NOT INTENDED AS A FULL TAKE-OFF OF ALL MATERIALS REQUIRED TO COMPLETE THE PROJECT PER CWS CO. STANDARD SPECIFICATIONS.
27. AT TIE-INS, CONTRACTOR SHALL SPRAY OR SWAB ALL FITTINGS WITH CHLORINE SOLUTION FOR DISINFECTION PRIOR TO FINAL CONNECTIONS.
28. CONTRACTOR TO ENSURE AIR IN THE PIPELINE IS REMOVED USING EXISTING OUTLETS, SUCH AS FIRE HYDRANTS AND BLOW OFFS. CONTRACTOR IS RESPONSIBLE FOR INSTALLING AIR RELEASES IF EXISTING OUTLETS ARE INSUFFICIENT.
29. ALL WORK SHALL COMPLY WITH CAL WATER SPECIFICATIONS FOR MATERIALS, INSTALLATION, DISINFECTION AND DECHLORINATION PER LATEST REVISION OF DRAWING CW-863.
30. IN GERNERAL, SERVICE LATERALS ARE NOT SHOWN ON THE DRAWINGS, THE CONTRACTOR SHALL ASSUME THAT THERE ARE BURIED WATER, SEWER, GAS, ELECTRIC, TELEPHONE AND TELEVISION SERVICE LATERALS AT EVERY PARCEL ALONG THE PIPELINE ROUTE. THE CONTRACTOR SHALL USE CAUTION AND PROTECT THESE BURIED SERVICE LATERALS. ANY DAMAGE TO THESE BURIED SERVICE LATERALS SHALL BE REPAIRED AT THE CONTRACTORS EXPENSE.

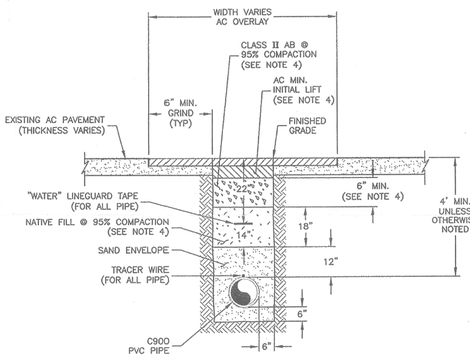

NOTE:
1. ALL EXCESS SPOIL IN TRACT IS TO REMAIN TRENCHSIDE AND ALL EXCESS SPOIL OFF TRACT IS TO BE REMOVED.
2. ALL VALVE CASINGS AND COVERS SHALL BE RAISED TO FINISHED GRADE AFTER PERMANENT PAVEMENT HAS BEEN PLACED.
3. SAW CUT TRENCH SECTION, FILL AND PLACE 2½" AC LIFT (MINIMUM).
4. LOCAL AGENCY STANDARDS SHALL APPLY FOR ALL PAVEMENT REPAIRS.

TRENCH CROSS SECTION (PAVED)
N.T.S.

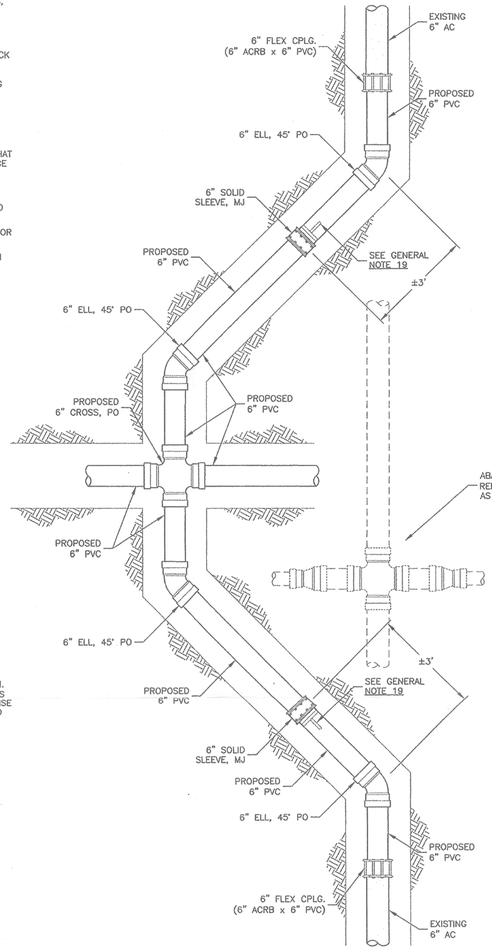

ABANDON EXISTING 6" CROSS & 6"x4" REDUCER
REMOVE EXISTING 4" STL PIPE & 6" AC PIPE
AS NECESSARY TO COMPLETE TIE-IN.

TIE-IN DETAIL "B"
SCALE: 1"=2'

LEGEND:

- TEE
- ELBOW, 45°
- ELBOW, 90°
- BLOWOFF (PROPOSED)
- BLOWOFF (EXISTING)
- GATE VALVE (PROPOSED)
- GATE VALVE (EXISTING)
- REDUCER (PROPOSED)
- REDUCER (EXISTING)
- SOLID PLUG
- PROPOSED WATER MAIN
- EXISTING WATER MAIN
- WALL
- SANITARY SEWER
- STORM DRAIN
- FIRE HYDRANT (PROPOSED)
- FIRE HYDRANT (EXISTING)
- BUTTERFLY VALVE
- CHECK VALVE
- FLEX CPLG.
- ALTITUDE VALVE

SUMMARY OF WORK

INSTALL:

1,425'±	6" PVC (C900)
3	TIE-IN TO EXISTING MAIN
1	FIRE HYDRANT RECONNECTION
38	SERVICE LATERAL RECONNECTION

ABANDON:

1,365'±	4" STL PIPE
30'±	6" AC PIPE

REMOVE:

20'±	OF 6" AC PIPE
10'±	OF 4" STL PIPE

POTHOLE AND VERIFY

CONTRACTOR WILL BE RESPONSIBLE FOR THE VERIFICATION OF DEPTHS AND LOCATION OF ALL EXISTING UTILITIES IN THE FIELD PRIOR TO COMMENCING WORK. LOCATIONS SHOWN ON THE PLANS ARE APPROXIMATE AND FOR GENERAL INFORMATION ONLY.

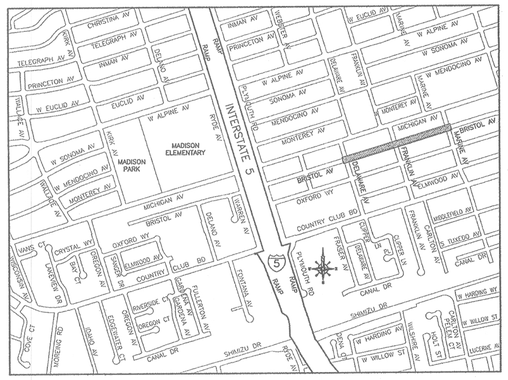

VICINITY MAP
1" = 1000'

BILL OF MATERIALS

QTY	DESCRIPTION
1,425± FT.	6" C900 PVC PIPE
1	6" CROSS, PO
1	6" TEE, PO
8	6" ELBOW, 45° PO
4	6" TRANS. COUPLING (ACxPVC)
4	6" SOLID SLEEVE, MJ
3	6" GATE VALVE, PO
38±	1" SERVICE SADDLES, CORP. STOPS, COUPLINGS, TUBING
AS REQ'D	RING GASKETS
AS REQ'D	TRACER WIRE #12 AWG SOLID COPPER WIRE W/45 MILS HMWPE
AS REQ'D	LINEGUARD TAPE
AS REQ'D	POLYWRAP TUBING FOR FITTINGS
AS REQ'D	PVC TAPE
AS REQ'D	METAL GUARD #301
AS REQ'D	RES-BIT WRAP

REFERENCE LIST ONLY – CONTRACTOR TO VERIFY AND OBTAIN ALL MATERIALS REQUIRED TO COMPLETE THE PROJECT.

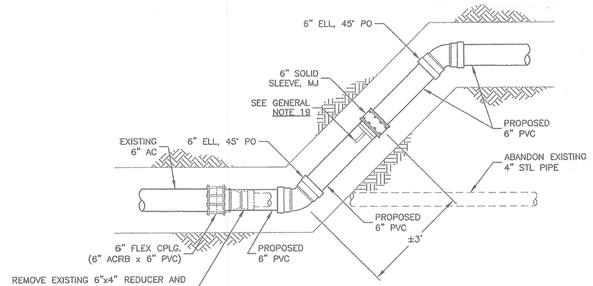

TIE-IN DETAIL "A"
(TWO LOCATIONS)
SCALE: 1" = 2'

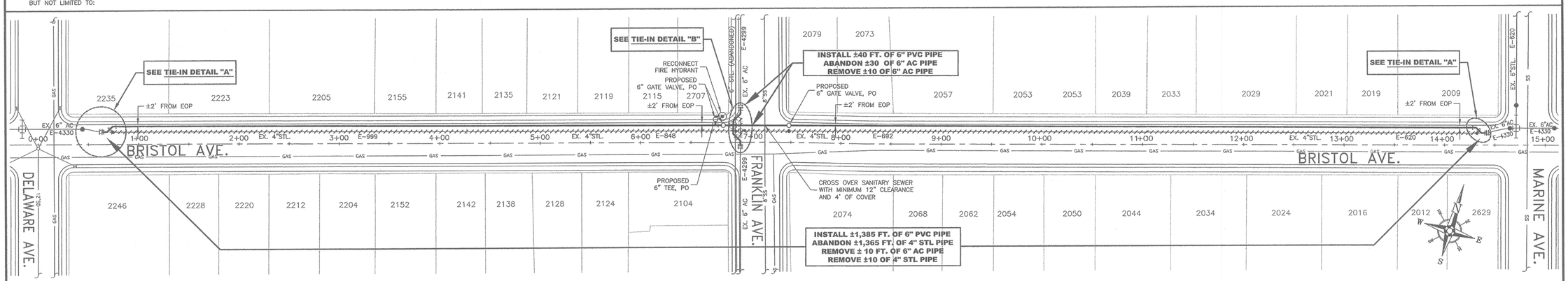

PLAN VIEW
SCALE: 1"=50'

ENGINEERING DEPARTMENT

CALIFORNIA WATER SERVICE CO.

REVISIONS:
1. CHANGE DESIGN TO TRADITIONAL TRENCH INSTEAD OF PIPEBURSTING W.R. 10/21/2009

	DATE	INIT.
DISTRIBUTION MAP		
PLAT SHEET		
SYSTEM SCHEMATIC		
STATION SCHEMATIC		
ZONE MAP		
VALVE SHOVED		

PLAT SHEET NO.: STK 29-25, 30-24, 30-25

SCALE: AS SHOWN

DRAWN BY: W. RODRIGUEZ

DESIGNED BY: R. ROWDEN

CHECKED BY: DATE:

APPROVED BY: DATE: 10/27/09

REGISTERED PROFESSIONAL ENGINEER RANDY B. ROWDEN No. C74078 EXP. 6-30-11 CIVIL STATE OF CALIFORNIA

TITLE: INSTALL 6" PVC PIPE IN BRISTOL AVE. FROM DELAWARE AVE. TO MARINE AVE.

DISTRICT: STOCKTON

DATE: 9/15/2009

PROJECT ID.: 17048

DRAWING NO.: STK-8656 R1

SHT 1 OF 1