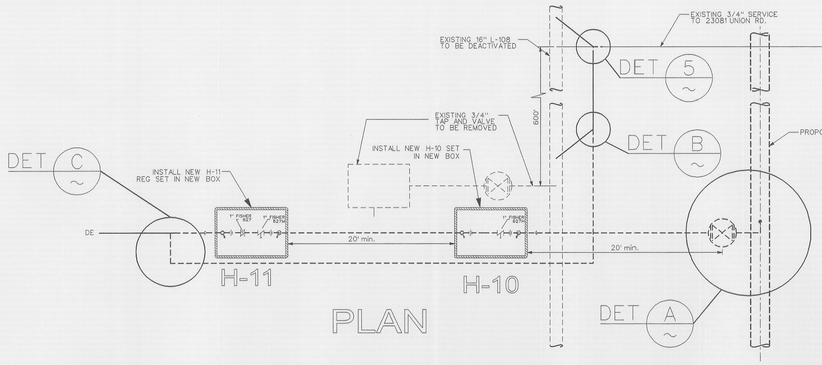

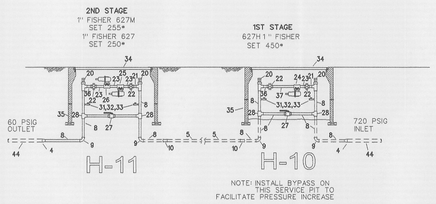

DETAIL 4/5
NO SCALE

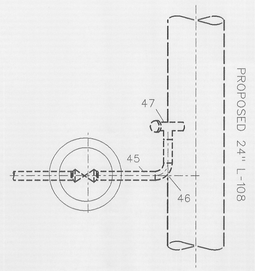

TOP VIEW
NTS

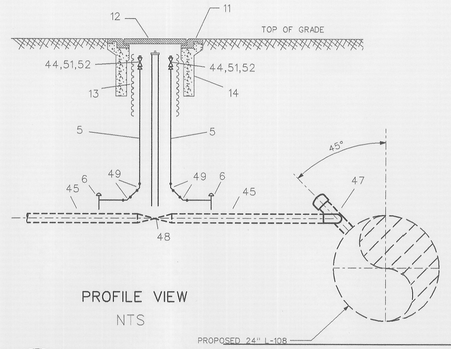

PROFILE VIEW
NTS

DETAIL A
NO SCALE

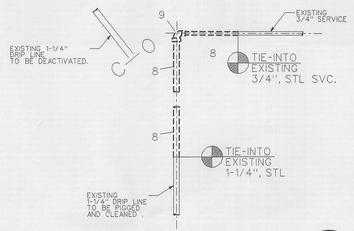

DETAIL 5
NO SCALE

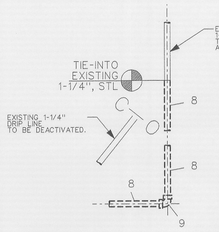

DETAIL B
NO SCALE

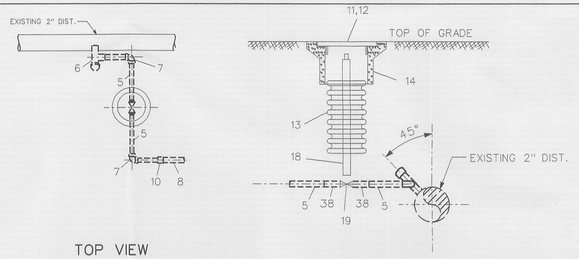

TOP VIEW
NTS

DETAIL C
NO SCALE

SAFETY

SAFETY PLEDGE

I ALWAYS PUT SAFETY FIRST.
I LOOK FOR AND ACT TO
RESOLVE UNSAFE SITUATIONS.
I HELP AND ENCOURAGE
OTHERS TO ACT SAFELY.

REGISTERED PROFESSIONAL ENGINEER
RYAN J. WEBSER
M34034
EXP. 06/10
MECHANICAL
STATE OF CALIFORNIA

PSRS# 18576

NO.	DATE	DESCRIPTION	GM/SPEC	DWN	CHKD	SUPV	APVD BY
1	12-18-09	ISSUED FOR CONSTRUCTION	30604309	KJT6	MANO	LXN1	

REVISIONS

APPROVED BY	
GM	30604309
SUPV	LXN1
DSGN	KJT6
DWN	KJT6
CHKD	MANO
OK	
DATE	12-18-09
SCALES	1/8"=1'

SECTIONS & DETAILS
RELOCATE 13,189' OF 24" PIPE
L-108 MP 11.73 - MP 14.13
SAN JOAQUIN COUNTY

PACIFIC GAS AND ELECTRIC COMPANY
WALNUT CREEK , CALIFORNIA

MICROFILM
BILL OF MATL SHEET 21
DWG LIST
SUPSDS
SUPSD BY
SHEET NO. 19 OF 24 SHEETS
30604309 1

N180B

...\Copy of L108 30604309.final.dgn 12/22/2009 8:40:25 AM