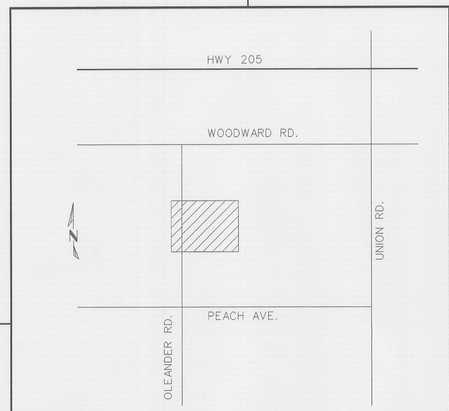

VICINITY MAP

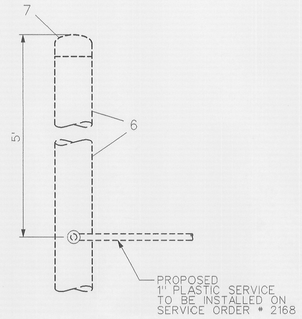

DETAIL 2
SCALE: 1/2" = 1'

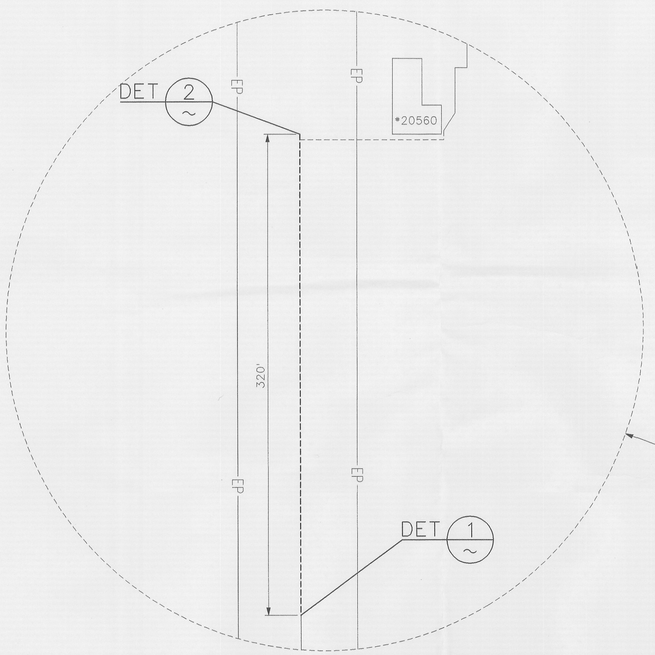

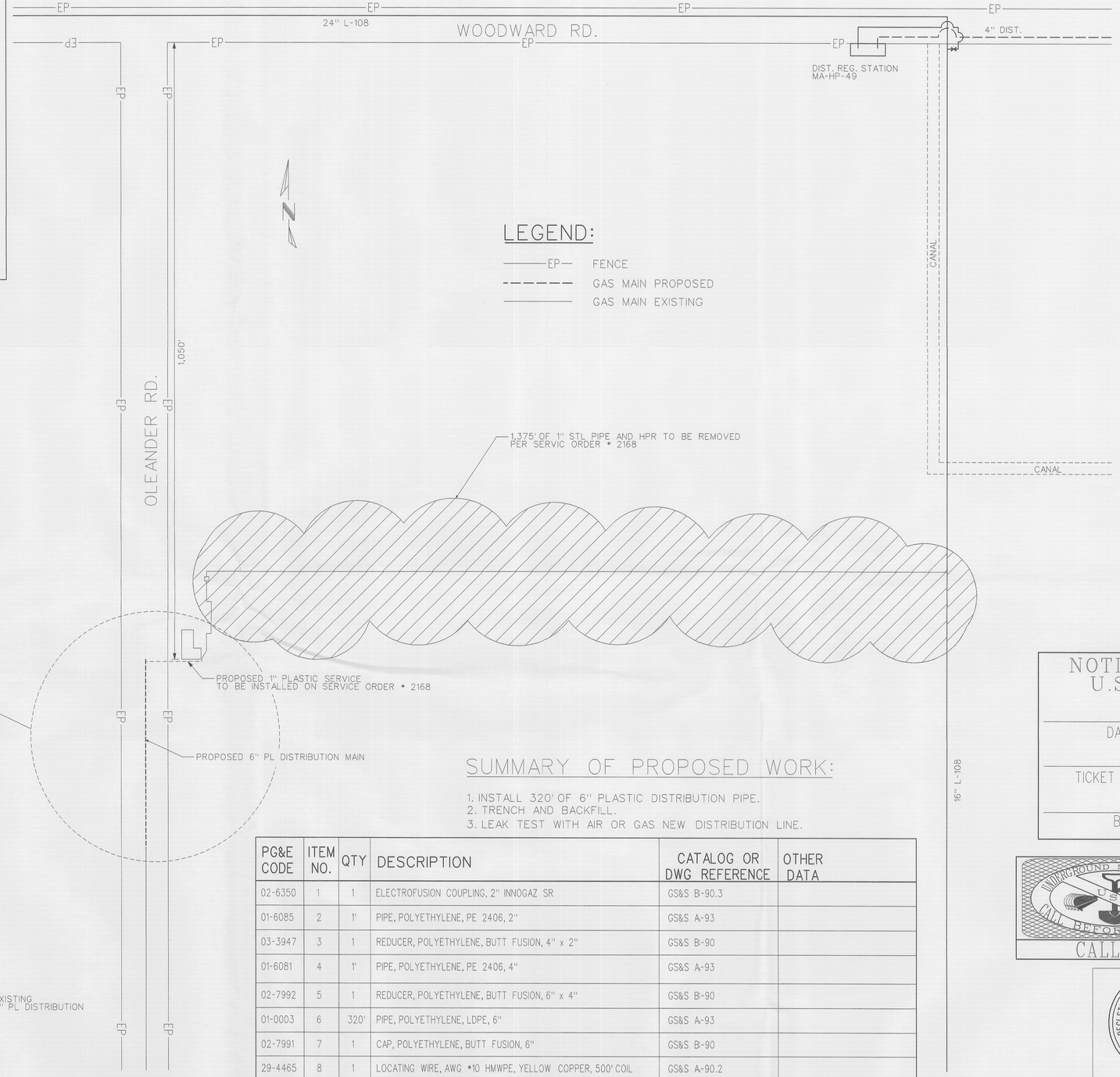

LEGEND:

- EP — FENCE
- GAS MAIN PROPOSED
- GAS MAIN EXISTING

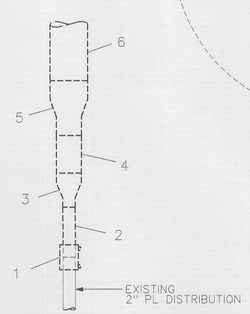

DETAIL 1
SCALE: 1/2" = 1'

SUMMARY OF PROPOSED WORK:

1. INSTALL 320' OF 6" PLASTIC DISTRIBUTION PIPE.
2. TRENCH AND BACKFILL.
3. LEAK TEST WITH AIR OR GAS NEW DISTRIBUTION LINE.

PG&E CODE	ITEM NO.	QTY	DESCRIPTION	CATALOG OR DWG REFERENCE	OTHER DATA
02-6350	1	1	ELECTROFUSION COUPLING, 2" INNOGAZ SR	GS&S B-90.3	
01-6085	2	1'	PIPE, POLYETHYLENE, PE 2406, 2"	GS&S A-93	
03-3947	3	1	REDUCER, POLYETHYLENE, BUTT FUSION, 4" x 2"	GS&S B-90	
01-6081	4	1'	PIPE, POLYETHYLENE, PE 2406, 4"	GS&S A-93	
02-7992	5	1	REDUCER, POLYETHYLENE, BUTT FUSION, 6" x 4"	GS&S B-90	
01-0003	6	320'	PIPE, POLYETHYLENE, LDPE, 6"	GS&S A-93	
02-7991	7	1	CAP, POLYETHYLENE, BUTT FUSION, 6"	GS&S B-90	
29-4465	8	1	LOCATING WIRE, AWG #10 HMWPE, YELLOW COPPER, 500' COIL	GS&S A-90.2	

NOTIFIED U.S.A.

DATE

TICKET NUMBER

BY

UNDERGROUND SERVICE ALERT USA
CALL BEFORE YOU DIG.
CALL: 811

REGISTERED PROFESSIONAL ENGINEER
RYAN J. WEBER
M34034
EXP. 06/10
MECHANICAL
STATE OF CALIFORNIA

ATTENTION FOREMAN
TEST ALL NEW MAINS AND SERVICES INCLUDING C.T.&T. AS FOLLOWS

	MAINS	SERVICES*
MINIMUM TEST PRESSURE	100 PSIG	100 PSIG*
MINIMUM TEST DURATION	5 MIN	5 MIN*
TEST FLUID	AIR	AIR*
ACTUAL TEST PRESSURE	_____	(SEE BELOW)*
DATE TEST	_____	(SEE BELOW)*
FOREMAN'S NAME	_____	(SEE BELOW)*

* RECORD THIS REQUIRED INFORMATION ON EACH "GAS SERVICE RECORD" FORM. (SEE P.G.&E. STANDARD A-34 PAGE 3 & 4)

2" PE (BOM# 2)

PLASTIC PIPE INSPECTION/DATA
FOOTAGE AND SIZE _____
PIPE MANUFACTURER _____
DATE MANUFACTURED _____

ATTENTION FOREMAN
TEST ALL NEW MAINS AND SERVICES INCLUDING C.T.&T. AS FOLLOWS

	MAINS	SERVICES*
MINIMUM TEST PRESSURE	100 PSIG	100 PSIG*
MINIMUM TEST DURATION	5 MIN	5 MIN*
TEST FLUID	AIR	AIR*
ACTUAL TEST PRESSURE	_____	(SEE BELOW)*
DATE TEST	_____	(SEE BELOW)*
FOREMAN'S NAME	_____	(SEE BELOW)*

* RECORD THIS REQUIRED INFORMATION ON EACH "GAS SERVICE RECORD" FORM. (SEE P.G.&E. STANDARD A-34 PAGE 3 & 4)

4" PE (BOM# 4)

PLASTIC PIPE INSPECTION/DATA
FOOTAGE AND SIZE _____
PIPE MANUFACTURER _____
DATE MANUFACTURED _____

ATTENTION FOREMAN
TEST ALL NEW MAINS AND SERVICES INCLUDING C.T.&T. AS FOLLOWS

	MAINS	SERVICES*
MINIMUM TEST PRESSURE	100 PSIG	100 PSIG*
MINIMUM TEST DURATION	5 MIN	5 MIN*
TEST FLUID	AIR	AIR*
ACTUAL TEST PRESSURE	_____	(SEE BELOW)*
DATE TEST	_____	(SEE BELOW)*
FOREMAN'S NAME	_____	(SEE BELOW)*

* RECORD THIS REQUIRED INFORMATION ON EACH "GAS SERVICE RECORD" FORM. (SEE P.G.&E. STANDARD A-34 PAGE 3 & 4)

6" PE (BOM# 6)

PLASTIC PIPE INSPECTION/DATA
FOOTAGE AND SIZE _____
PIPE MANUFACTURER _____
DATE MANUFACTURED _____

APPROVED BY		
	SO	30604309
	SUPV	LXN
	DSGN	KJT

INSTALL 320' OF 6" PL DIST. PIPE
RELOCATE 13,143' OF 24" PIPE
L-108 MP 11.73

MICROFILM
BILL OF MATL
DWG LIST
SUPSDS