COUNTY OF SAN JOAQUIN

DEPARTMENT OF PUBLIC WORKS
P.O. BOX 1810-1810 E. HAZELTON AVENUE
STOCKTON, CALIFORNIA 95201
(209) 468-3000
FAX # (209) 468-9324

Permit No: **PS-1000147**
Date Issued: 01/27/2010
Exp. Date: 04/01/2010
Project No: PWP110005
Quad: SE

UE/CR/PM NO:30603910

ENCROACHMENT PERMIT

To: PG & E
375 N. WIGET LN.
WALNUT CREEK, CA 94598

Encroachment Type:

Potholes - (6)			

Location:
E/S OF AIRPORT WAY 1/4 MILE S/O LOVELACE RD. RUNNING NORTH APPROX. 2 MILES

In compliance with your request of **01/27/2010** , permission is hereby granted to do work in County right-of-way as shown on attached application and subject to all the terms, conditions and restrictions written below or printed as general or special provisions on any part of this form. See reverse side and attached sheet, if any.

Trench excavations for service connections will not be permitted within ten feet (10') of pavement centerline unless otherwise approved by the Director. Surface of trench patches shall match in kind and be smooth and even with that of abutting surface. Special attention shall be given to depth of utilities through roadside area in anticipation of future drainage facilities, road profile and/or frontage development. All underground utility facilities are to be established and accurately dimensioned on sketches from surveyed centerline of road right of way, or from right of way (border) lines.

The Department of Public Works, Field Inspection Section shall receive a notice at least forty-eight hours prior to beginning any work within the County right of way. All work performed under this permit shall conform to the rules and regulations pertaining to safety established by the California Division of Industrial Safety and Cal-OSHA.

The jobsite shall be kept in a safe condition at all times by the daily removal of any excess dirt or debris which might be a hazard to either pedestrian or automobile traffic. All necessary traffic convenience and warning devices and personnel shall be provided, placed and maintained by and at the sole expense of the Permittee in accordance with the latest edition of the CALTRANS Manual of Traffic Control.

After completion of the work permitted herein, all debris, lumber, barricades, or any excess material shall be removed and the jobsite left in a neat workmanlike manner. Immediately following completion of construction permitted herein, Permittee shall fill out and mail notice of completion provided by Grantor.

Special Comments:

Traffic Control Per MUTCD

FORMS:

SS/WW, R-29		

Est. Permit Fee: $810.00

THOMAS R. FLINN, Director
Department of Public Works

By: _____
Permit Section

WHITE	-Permitee
GOLDENROD	-PWD Central File
YELLOW	-Field Inspection
PINK	-Permit Section

ENCROACHMENT PERMIT

GENERAL PROVISIONS

1. This permit is issued under and subject to all laws and ordinances of agencies governing the encroachment herein permitted. See the following references:
   STREETS AND HIGHWAYS CODE
   1. Division 1, Chapter 3
   2. Division 2, Chapter 2, Section 942
   3. Division 2, Chapter 4, Section 1126
   4. Division 2, Chapter 6

   SAN JOAQUIN COUNTY ORDINANCES NUMBERED: 324, 441, 648, 662, 672, 695, 700, 860, and 892.

2. It is understood and agreed by the Permittee that the doing of any work under this permit shall constitute an acceptance of all the provisions contained herein and failure on the Permittee's part to comply with any provision will be cause for revocation of this permit. Except as otherwise provided for public agencies and franchise holders, this permit is revocable on five days notice.

3. All work shall be done subject to the supervision of and the satisfaction of the grantor. The Permittee shall at all times during the progress of the work keep the County Highway in as neat and clean a condition as is possible and upon completion of the work granted herein, shall leave the County Highway in a thoroughly neat, clean and usable condition.

4. The Permittee also agrees by the acceptance of this permit to properly maintain any encroachment structure placed by the Permittee on any part of the County Highway and to immediately repair any injury to any portion of the highway, which occurs as a result of the maintenance of the said encroachment structure, until such time as the Permittee may be relieved of the responsibility of such maintenance of the encroachment structure by the County of San Joaquin.

5. The Permittee also agrees by the acceptance of this permit to make, at its own expense, such repairs as may be deemed necessary by the County Director of Public Works or his representative.

6. It is further agreed by the Permittee that whenever construction, reconstruction or maintenance work upon the highway may. require, the installation provided for herein shall, upon request of the County Department of Public Works, be immediately moved by and at the sole expense of the Permittee.

7. No material used for fill or backfill in the construction of the encroachment shall be borrowed or taken from within the County right of way.

8. All work shall be planned and carried out so that there will be as little inconvenience as possible to the traveling public. No material shall be stacked within eight feet (8') of the edge of the pavement or traveled way unless otherwise provided herein. Adequate provision shall be made for the protection of the traveling public. Barricades shall be placed, With approved Signs and lights at light, and flagmen shall be employed, all as may be required by the particular work in progress.

9. The Permittee, by the acceptance of this permit, shall assume full responsibility for all liability for personal injury or damage to property which may arise out of the work herein permitted or which may arise out of the failure of the part of the Permittee to do the work provided for under this permit. In the event any .claim of such liability is made against the County of San Joaquin or any department, official or employee thereof, the Permittee shall defend, indemnify, and hold them and each of them harmless for such claim.

10. All backfill material is to be moistened as necessary and thoroughly compacted with mechanical means. If required by the County Director of Public Works, such backfill shall consist of gravel or crushed rock. The Permittee shall maintain the surface over structures placed hereunder as may be necessary to insure the return of the roadway to a completely Stable condition and until relieved of such responsibility by the County Department of Public Works. Wherever a gravel, crushed rock or asphalt surfacing is cut or damaged in the work of placing an encroachment structure, such material shall either be separately stored and replaced in the roadway as nearly as possible.in its original state or shall be replaced in kind, and the roadway shall be left in at least as good a condition as It was before the commencement of operations of placing the encroachment structure.

11. Whenever necessary to, secure permission from abutting property owners, such authority must be secured by the Permittee prior to starting work..

12. The future safety and convenience of the traveling public shall be given every consideration in the location and type of construction.

APPLICATION FOR ENCROACHMENT PERMIT

PLEASE PRINT:

Date 1/11/10

To: San Joaquin County
Department of Public Works

PG&E % PETER SANDER
(Applicant Name)

375 N. WIGET LN
(Mailing Address)

WALNUT CREEK CA 94598
(City, State, Zip Code)

925 974 4167
(Area Code - Telephone Number)

OFFICE USE ONLY

JOB # 730052-20 REF #
APN CR #
EXP. DATE
VALID TO DRIVEWAYS:
STREET AIRPORT WAY *
AREA STKN QUAD 5E *
TYPE POTHOLES (6) *
FORMS 95/WW, R-29
NOTE

Sketch (Detailed plans may be submitted)

SEE ATTACHED PM# 30603910

The undersigned hereby applies for permission to excavate, construct and/or otherwise encroach on County Highway Right-of-Way on the EAST side of S. AIRPORT WAY approximately feet/mile 1.75 of DIRT, , by performing the following work (description of work): PROPOSED TO POTHOLE VARIOUS SITES (6) LOCATIONS ALONG THE SIDE OF S AIRPORT WAY. TO VERIFY CUSTOMER SERVICES.

Work will commence on or about for approximately days.

I, the undersigned certify that I am the owner of the respective property, or am qualified to represent the owner and agree to do the work described above in accordance with the rules, regulations of San Joaquin County and subject to inspection and approval.

ENGINEERING SUPPORT.
Signature of Applicant - Title

1/11/10
Date

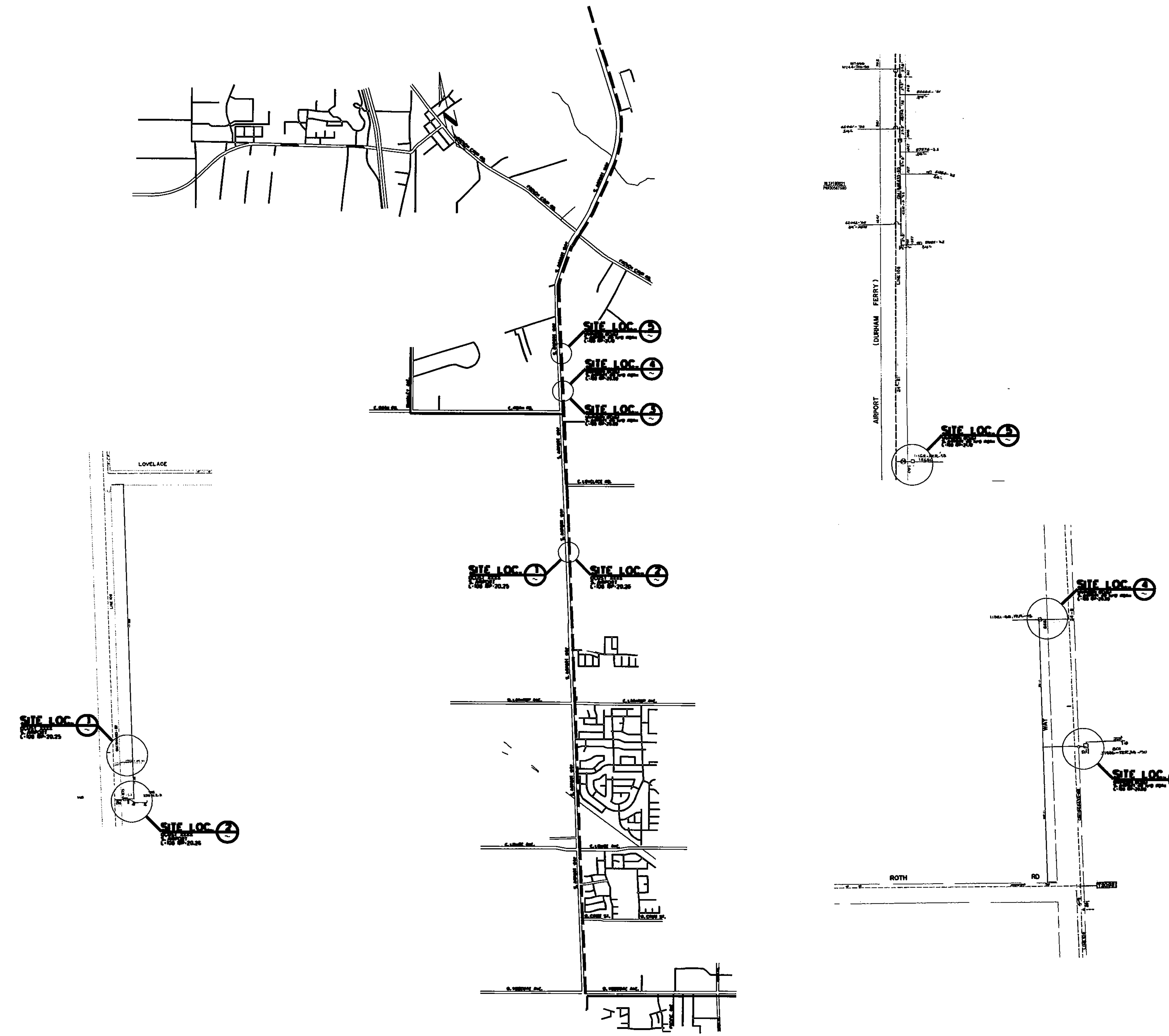

NO.	DATE	DESCRIPTION	GM/SPEC	DWN	CHKD	SUPV	APVD BY

REVISIONS

NO.	DATE	DESCRIPTION	GM/SPEC	DWN	CHKD	SUPV	APVD BY
1		ISSUED FOR PERMITTING ONLY	30603910	PJS	CDB	LXN	

REVISIONS

APPROVED BY

SUPV L. NOVELLIN
DSGN P. SANDER
DWN P. SANDER
CHKD C. BRISTOW
DATE 1/11/2010
SCALE NO SCALE

POT HOLING IN SAN JOAQUIN CO.
12900, 13856, 11315, 11321 & 11152
S. AIRPORT WAY
SAN JOAQUIN CO.

GAS TRANSMISSION & DISTRIBUTION
PACIFIC GAS AND ELECTRIC COMPANY
SAN FRANCISCO, CALIFORNIA

MICROFILM
BILL OF MAT.
DWG LIST
SUPSDS
SUPSD BY
SHEET NO. 1 OF 1 SHEETS

30603910 REV 1

FILENAME: ____DGN

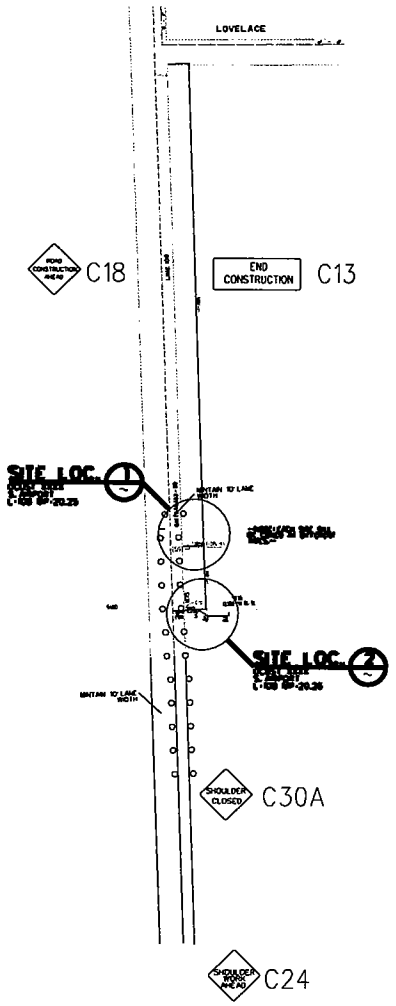

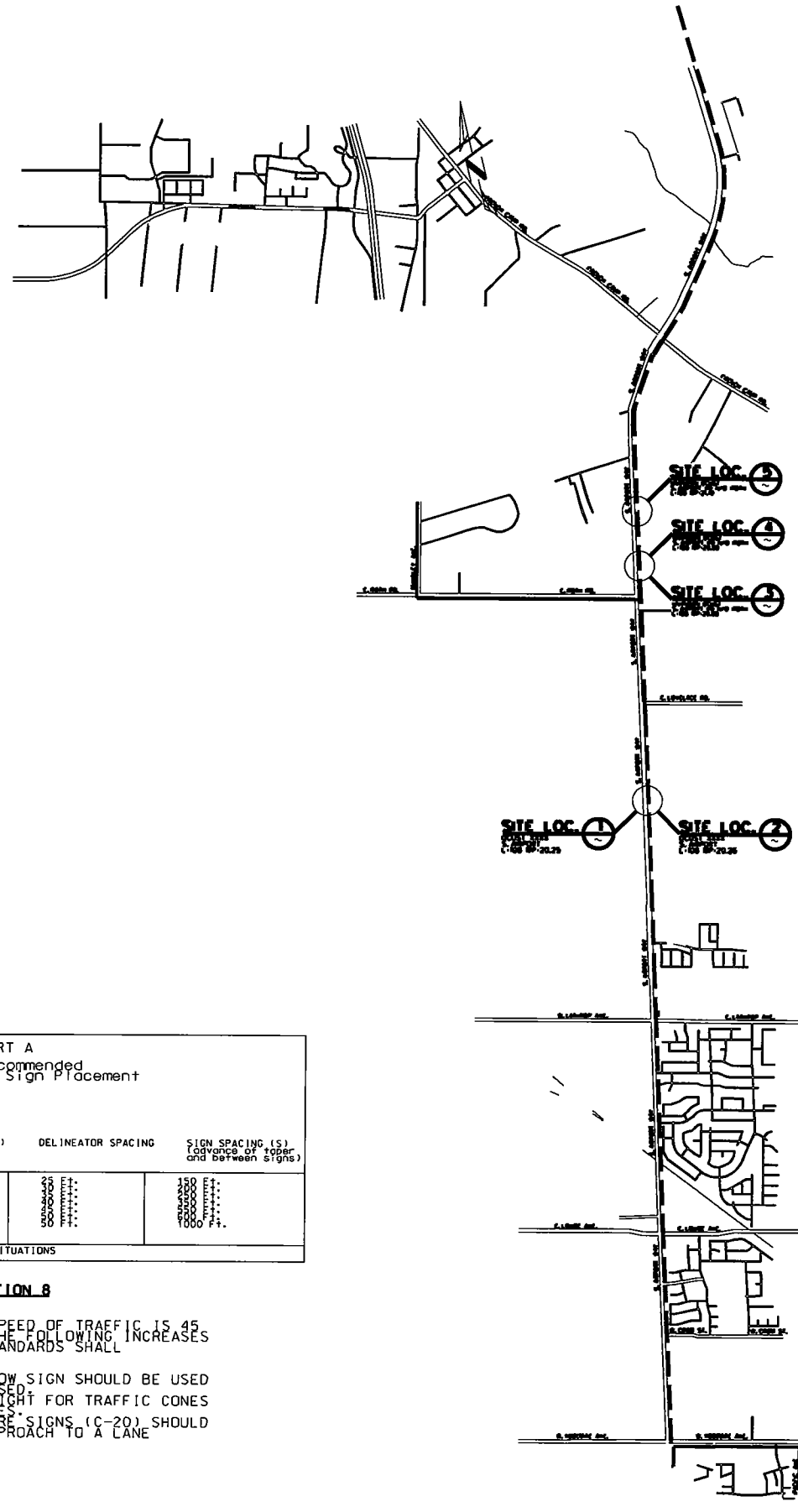

LEGEND

- DIRECTION OF TRAVEL
- PORTABLE SIGN
- TRAFFIC CONE/DELINEATOR
- TYPE IIBARRICADE
- FLAGGER
- FLAG TREE
- FLASHING ARROW SIGN
- FLASHING WARNING LIGHT (SEE SIGNAGE NOTE *2)
- K-RAIL (TYPE 50 CONCRETE BARRIER)

SIGNS

- C1 DETOUR AHEAD
- C9A
- C13 END CONSTRUCTION
- C14 END ROAD WORK
- C18 ROAD CONSTRUCTION AHEAD
- C20 ROAD WORK NEXT XX MILES
- C24 SHOULDER WORK AHEAD
- C30 LANE CLOSED
- C30A SHOULDER CLOSED
- C30(Bike) BIKE LANE CLOSED
- C36 PREPARE TO STOP

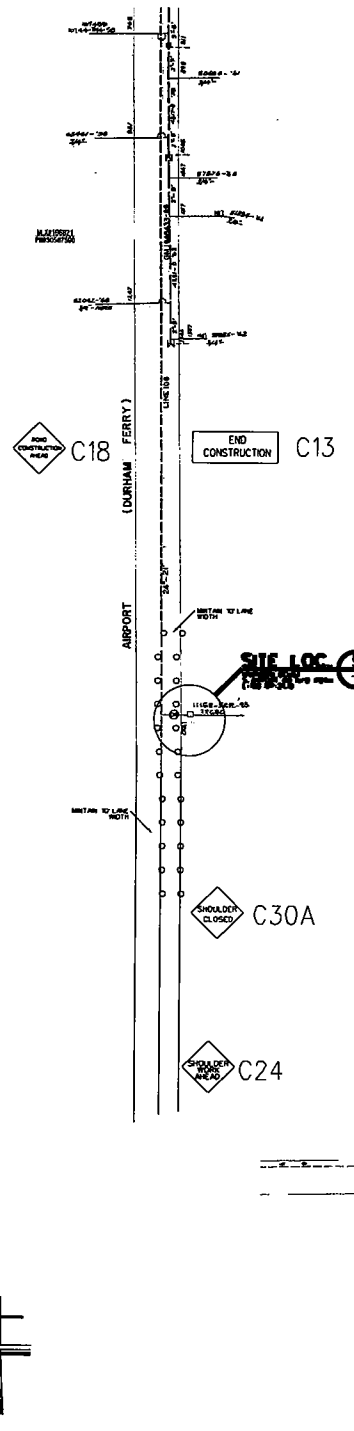

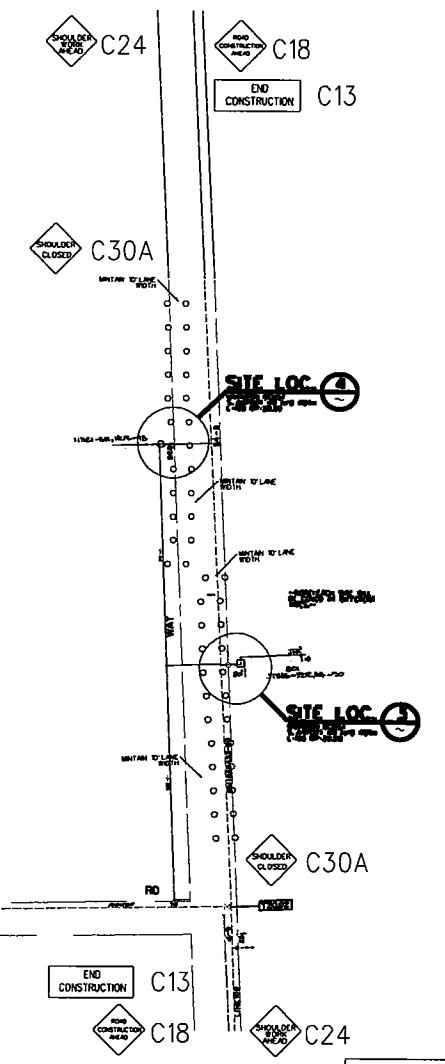

CHART A
Minimum Recommended
Delineator and Sign Placement

Traffic Speed	TAPER LENGTH (L)	DELINEATOR SPACING	SIGN SPACING (S) (advance of taper and between signs)
25 MPH	150 Ft.	25 Ft.	150 Ft.
30 MPH	180 Ft.	30 Ft.	180 Ft.
35 MPH	245 Ft.	35 Ft.	245 Ft.
40 MPH	320 Ft.	40 Ft.	320 Ft.
45 MPH	450 Ft.	45 Ft.	450 Ft.
50 MPH	600 Ft.	50 Ft.	600 Ft.
55+ MPH	1000 Ft.	50 Ft.	1000 Ft.

* NOTE: SEE SECTION 8 FOR HIGH SPEED SITUATIONS

SECTION 8

WHEN PREVAILING SPEED OF TRAFFIC IS 45 MPH OR GREATER, THE FOLLOWING INCREASES IN THE MINIMUM STANDARDS SHALL APPLY:

1. A FLASHING ARROW SIGN SHOULD BE USED FOR EACH LANE CLOSED.
2. THE MINIMUM HEIGHT FOR TRAFFIC CONES SHOULD BE 28 INCHES.
3. TWO LANE CLOSURE SIGNS (C-20) SHOULD BE USED ON THE APPROACH TO A LANE CLOSURE.

NO.	DATE	DESCRIPTION	GM/SPEC	DWN	CHKD	SUPV	APVD BY
1		ISSUED FOR PERMITTING ONLY	30603910	PJS	CDB	LIN	

REVISIONS

APPROVED BY: SUPV. L. NOMELLINI; MGR. P. SANDER; MGR. P. SANDER; CHKD C. BRISTOW; DR; DATE 7/11/2010; SCALE NO SCALE

PG1 HOLMES & SAN JOAQUIN CO.
12000, 13000, 11000 & 10012
S. AIRPORT WAY
SAN JOAQUIN CO.

GAS TRANSMISSION & DISTRIBUTION
PACIFIC GAS AND ELECTRIC COMPANY
SAN FRANCISCO, CALIFORNIA

MICROFILM
BILL OF MAIL
DWG LIST
DRAWING
SUPER BY
SHEET NO. 1 OF 1 SHEETS
30603910

FILENAME: ____.DGN