COUNTY OF SAN JOAQUIN

DEPARTMENT OF PUBLIC WORKS
P.0. BOX 1810-1810 E. HAZELTON AVENUE
STOCKTON, CALIFORNIA 95201
(209) 468-3000
FAX # (209) 468-9324

Permit No: **PS-1902280**
Date Issued: 07/09/2019
Start Date: 08/15/2019
Exp. Date: 01/15/2020
Project No: PWP730052
Quad: SE

UE/CR/PM NO:31419862

ENCROACHMENT PERMIT

To: PACIFIC GAS & ELECTRIC - STOCKTON
PO BOX 930
STOCKTON, CA 95201

Encroachment Type:

New Pole Install	Bore (up to 12 inch Dia)		

Location:
N/S OF YETTNER RD. 1645' W/O MANTHEY RD.

In compliance with your request of **07/09/2019** , permission is hereby granted to do work in County right-of-way as shown on attached application and subject to all the terms, conditions and restrictions written below or printed as general or special provisions on any part of this form. See reverse side and attached sheet, if any.

Trench excavations for service connections will not be permitted within ten feet (10') of pavement centerline unless otherwise approved by the Director. Surface of trench patches shall match in kind and be smooth and even with that of abutting surface. Special attention shall be given to depth of utilities through roadside area in anticipation of future drainage facilities, road profile and/or frontage development. All underground utility facilities are to be established and accurately dimensioned on sketches from surveyed centerline of road right of way, or from right of way (border) lines.

Permittee shall call the Department of Public Works, Field Engineering Division (Permit Inspections) at (209)953-7421 at least forty-eight hours prior to beginning any work within the County right of way. All work performed under this permit shall conform to the rules and regulations pertaining to safety established by the California Division of Industrial Safety and Cal-OSHA.

The jobsite shall be kept in a safe condition at all times by the daily removal of any excess dirt or debris which might be a hazard to either pedestrian or automobile traffic. All necessary traffic convenience and warning devices and personnel shall be provided, placed and maintained by and at the sole expense of the Permittee in accordance with the latest edition of the CALTRANS Manual of Traffic Control.

After completion of the work permitted herein, all debris, lumber, barricades, or any excess material shall be removed and the jobsite left in a neat workmanlike manner. Immediately following completion of construction permitted herein, Permittee shall fill out and mail notice of completion (see attached post card) provided by Grantor.

Special Comments:

Traffic Control Per MUTCD******See Attached "Special Conditions"*****

FORMS:	SS/WW, R-29		

Est. Permit Fee: $747.00

KRIS BALAJI, Director
Department of Public Works

By: _____
Permit Section

WHITE	-Permittee
GOLDENROD	-PWD Central File
YELLOW	-Field Inspection
PINK	-Permit Section

ENCROACHMENT PERMIT GENERAL PROVISIONS

13-1

1. This permit is issued under and subject to all laws and ordinances of agencies governing the encroachment herein permitted. See the following references:
   STREETS AND HIGHWAYS CODE
   1. Division 1, Chapter 3
   2. Division 2, Chapter 2, Section 942
   3. Division 2, Chapter 4, Section 1126
   4. Division 2, Chapter 5.5 and Chapter 6

   SAN JOAQUIN COUNTY ORDINANCES NUMBERED: 324, 441, 648, 662, 672, 695, 700, 860, 892, 3359, and 3675.

2. It is understood and agreed by the Permittee that the performance of any work under this permit shall constitute an acceptance of all the provisions contained herein and failure on the Permittee's part to comply with any provision will be cause for revocation of this permit. Except as otherwise provided for public agencies and franchise holders, this permit is revocable on five days notice.

3. All work shall be done subject to the supervision of and the satisfaction of the grantor. The Permittee shall at all times during the progress of the work keep the County Highway in as neat and clean condition as is possible and upon completion of the work authorized herein, shall leave the County Highway in a thoroughly neat, clean and usable condition.

4. The Permittee also agrees by the acceptance of this permit to properly maintain any encroachment structure placed by the Permittee on any part of the County Highway and to immediately repair any damage to any portion of the highway, which occurs as a result of the maintenance of the said encroachment structure, until such time as the Permittee may be relieved of the responsibility for such maintenance by the County of San Joaquin.

5. The Permittee also agrees by the acceptance of this permit to make, at its own expense, such repairs as may be deemed necessary by the County Department of Public Works.

6. It is further agreed by the Permittee that whenever construction, reconstruction or maintenance work upon the highway is necessary, the installation provided for herein shall, upon request of the County Department of Public Works, be immediately moved or removed by and at the sole expense of the Permittee.

7. No material used for fill or backfill in the construction of the encroachment shall be borrowed or taken from within the County right of way.

8. All work shall be planned and carried out with as little inconvenience as possible to the traveling public. No material shall be stacked within eight feet (8') of the edge of the pavement or traveled way unless otherwise provided herein. Adequate provision shall be made for the protection of the traveling public. Traffic control standards shall be utilized including barricades; approved signs and lights; and flagmen, as required by the particular work in progress.

9. The Permittee, by the acceptance of this permit, shall assume full responsibility for all liability for personal injury or damage to property which may arise out of the work herein permitted or which may arise out of the failure of the part of the Permittee to properly perform the work provided under this permit. In the event any claim of such liability is made against the County of San Joaquin or any department, official or employee thereof, the Permittee shall defend, indemnify, and hold each of them harmless for such claim.

10. All backfill material is to be moistened as necessary and thoroughly compacted with mechanical means. If required by the County Director of Public Works, such backfill shall consist of gravel or crushed rock. The Permittee shall maintain the surface over structures placed hereunder as may be necessary to insure the return of the roadway to a completely stable condition and until relieved of such responsibility by the County Department of Public Works. Wherever a gravel, crushed rock or asphalt surface is removed or damaged in the course of work related to the permitted encroachment, such material shall either be separately stored and replaced in the roadway as nearly as possible in its original state or shall be replaced in kind, and the roadway shall be left in at least as good a condition as it was before the commencement of operations of placing the encroachment structure.

11. Whenever it becomes necessary to secure permission from abutting property owners for the proposed work, such authority must be secured by the Permittee prior to starting work.

12. The current and future safety and convenience of the traveling public shall be given every consideration in the location and methods of construction utilized.

13. The Permittee is responsible for the preservation of survey monuments located within the area of work herein permitted. Prior to the start of construction, survey monuments that potentially may be disturbed shall be located and referenced by a Licensed Land Surveyor, and a Corner Record filed with the County Surveyor. Any Survey Monuments disturbed during the course of construction shall be reestablished by a Licensed Land Surveyor and another Corner Record filed with the County Surveyor. (Land Surveyors' Act Section 8771)

14. Prior to any excavation, the Permittee shall notify USA North (Underground Service Alert of Northern California and Nevada) at 811 or 800-227-2600 forty-eight (48) hours in advance.

APPLICATION FOR ENCROACHMENT PERMIT

PLEASE PRINT:

Date 6/17/19

To: San Joaquin County
Department of Public Works

PG&E PM 31419862
(Applicant Name)

1524 N Carpenter Rd
(Mailing Address)

Modesto, CA 95351
(City, State, Zip Code)

209-857-0181
(Area Code - Telephone Number)

WAT8@PGE.COM
(Email Address)

OFFICE USE ONLY

JOB #	730052-C0	REF #	
APN		CR #	
EXP. DATE	1/15/20		
VALID	8/15/19 TO 1/15/20	DRIVEWAYS:	
STREET	YETTNER RD.	*	
AREA	STOCKTON QUAD SE	*	
TYPE	New Pole, Bore	*	
FORMS	SJ/WW, R-29		
NOTES	Special Conditions		

Sketch (Detailed plans may be submitted)

Crew to call SJ County Inspector at (209) 953-7421 48 to 72 hours **before** work starts.
When calling, crew shall request "rain clearance" for any work during winter months
November through March

The undersigned hereby applies for permission to excavate, construct and/or otherwise encroach on County Highway Right-of-Way on the North side of Yettner Rd approximately 1,645' (feet)/mile West of Manthey Rd, French Camp, by performing the following work (description of work):

Interset new pole with riser; pull cable at LOC 1 - LOC 2 for work in pvt property

Work will commence on or after 8/15/19 - 11/25/19 for approximately 6 months days.

I, the undersigned, certify that I am the owner of the respective property, or am qualified to represent the owner and agree to do the work described above in accordance with the rules and regulations of San Joaquin County and subject to inspection and approval.

Walther Tigerino
Signature of Applicant - Title

6/17/19
Date

SAN JOAQUIN COUNTY
Greatness grows here.

Public Works
Working for YOU

Department of Public Works
Kris Balaji, Director of Public Works
Fritz Buchman, *Deputy Director/Development*
Michael Selling, *Deputy Director/Engineering*
Jim Stone, *Deputy Director/Operations*
Kristi Rhea, *Manager of Strategic Initiatives*

Acknowledgement of Monument Preservation

I, Brett Brusatori, a duly Licensed Land Surveyor or a Professional Engineer
(Please print)

authorized to perform Land Surveying in the State of California, Registration No. 8775,

hereby acknowledge and accept all responsibility for the monument preservation as required

per Section 8771(a-f) of the Business and Professions Code within the bounds of the

construction activity permitted by San Joaquin County Permit No. PS-1902280. PM# 31419862

I further acknowledge that I am hereby responsible for the Acknowledgement of Monument

Preservation prior to final acceptance of the construction activity.

*no monuments in the vicinity of work

Signature

Seal

PROFESSIONAL LAND SURVEYOR
BRETT G. BRUSATORI
No. 8775
STATE OF CALIFORNIA

6/17/2019
Date

PS-MONUMENT PRESERVATION

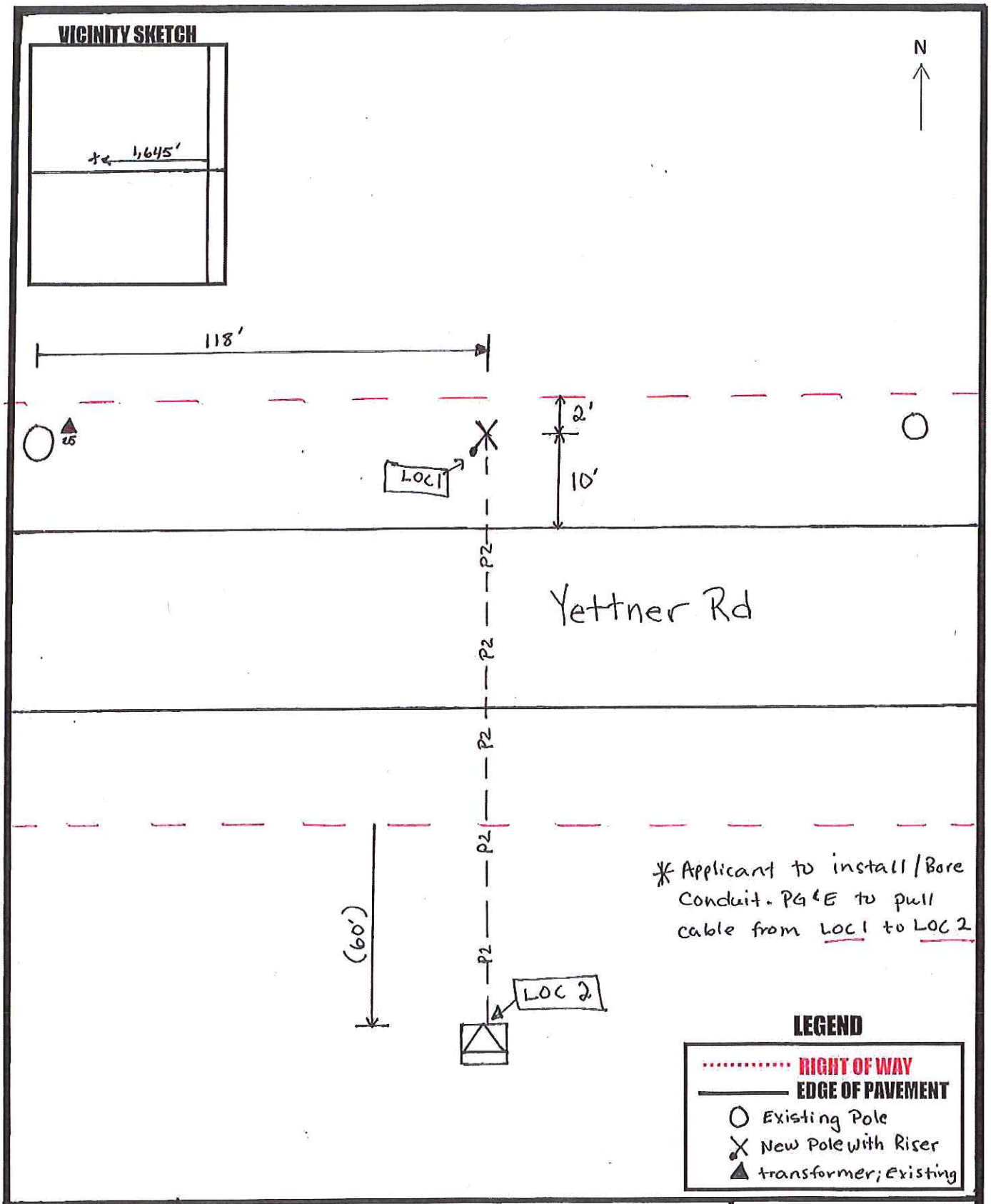

PERMIT SKETCH

Install Pole; Pull cable

PM 31419862

TEMPORARY TRAFFIC CONTROL PLAN DIMENSION GUIDELINES

SPEED MPH (2)	Dimension A/B/C ADVANCE WARNING SIGN SPACING (5)	Dimension L MERGING TAPER LENGTH	Dimension L/2 SHIFTING TAPER LENGTH	Dimension L/3 MINIMUM SHOULDER TAPER	Dimension "E" BUFFER SPACE (4-A) and FLAGGER STATION STOPPING SIGHT DISTANCE (4-B) (0%) (-3%) (-6%)	MAXIMUM CHANNELIZER TAPER SPACING (3)	MAXIMUM CHANNELIZER TANGENT SPACING (3)	MAXIMUM CHANNELIZER CONFLICT SPACING (6)
MPH	Ft	ft	ft	ft	ft	ft	ft	ft
25	100	125	65	45	(155) (160) (165)	25	50	12
30	250	180	90	60	(200) (205) (215)	30	60	15
35	250	245	125	85	(250) (260) (275)	35	70	17
40	250	320	160	110	(305) (315) (335)	40	80	20
45	350	540	270	180	(360) (380) (400)	45	90	22
50	350	600	300	200	(425) (450) (475)	50	100	25
55	500	660	330	220	(495) (520) (555)	50	100	25
60	500	720	360	240	(570) (600) (640)	50	100	25
65	500	780	390	260	(645) (685) (730)	50	100	25

(1)	Work on Freeways and Expressways shall meet the Caltrans Standard Plans and Standard Specification requirements.
(2)	Posted Speed or observed operating speed (whichever is greater).
(3)	Channelizer spacing shall be reduced by half at areas where work is taking place on curves or areas of head-on conflict.
(4-A)	Buffer space may be inserted in low-speed urban areas and should be inserted in high-speed urban and rural areas.
(4-B)	The Stopping Sight Distance should enable Road Users to see the Primary Flagger Station and safely stop.
(5)	Sign spacing in rural areas should be 500 ft.
(6)	** Table 6F-101(CA)

Figure 6H-6. Shoulder Work with Minor Encroachment (TA-6)

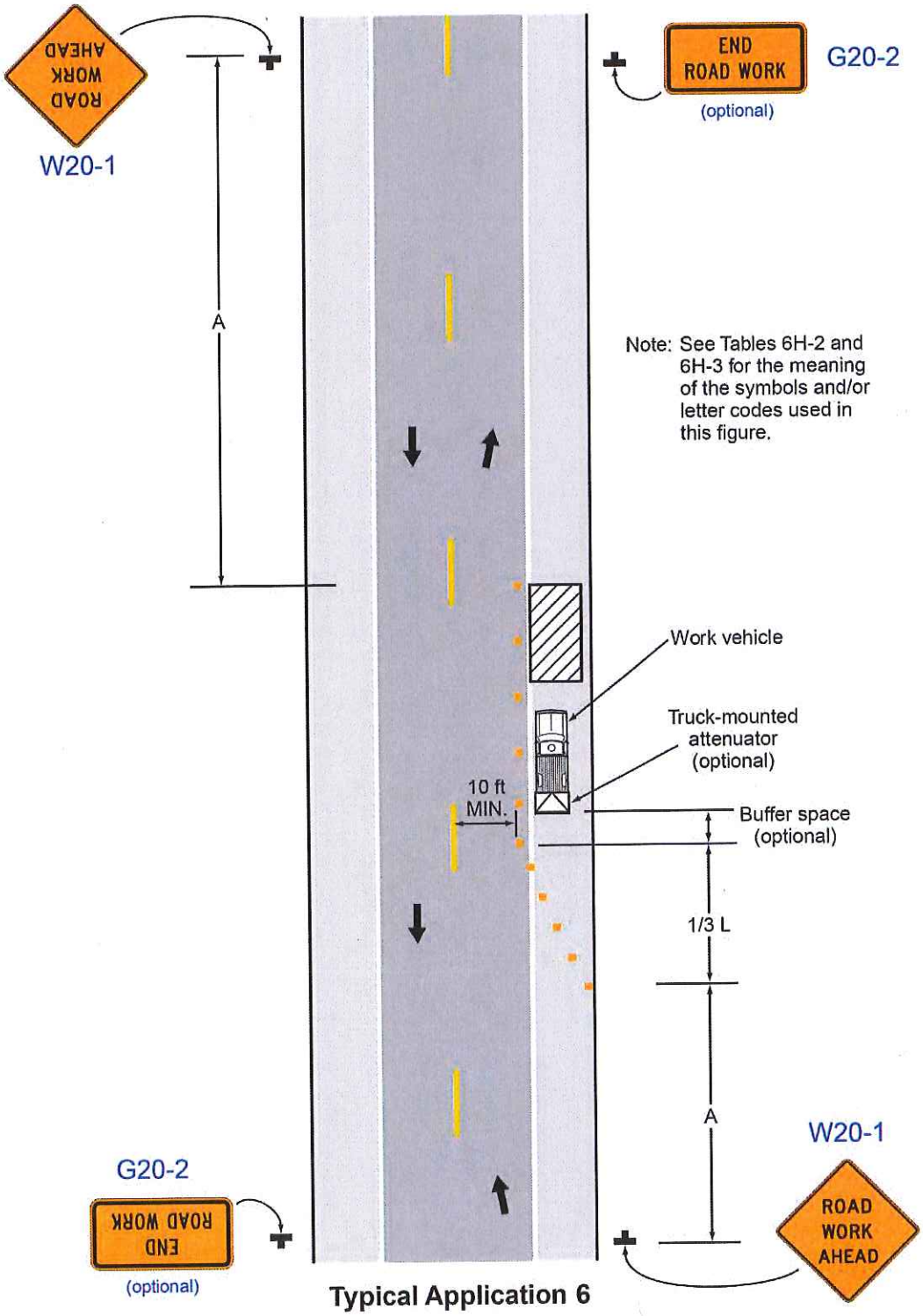

Typical Application 6

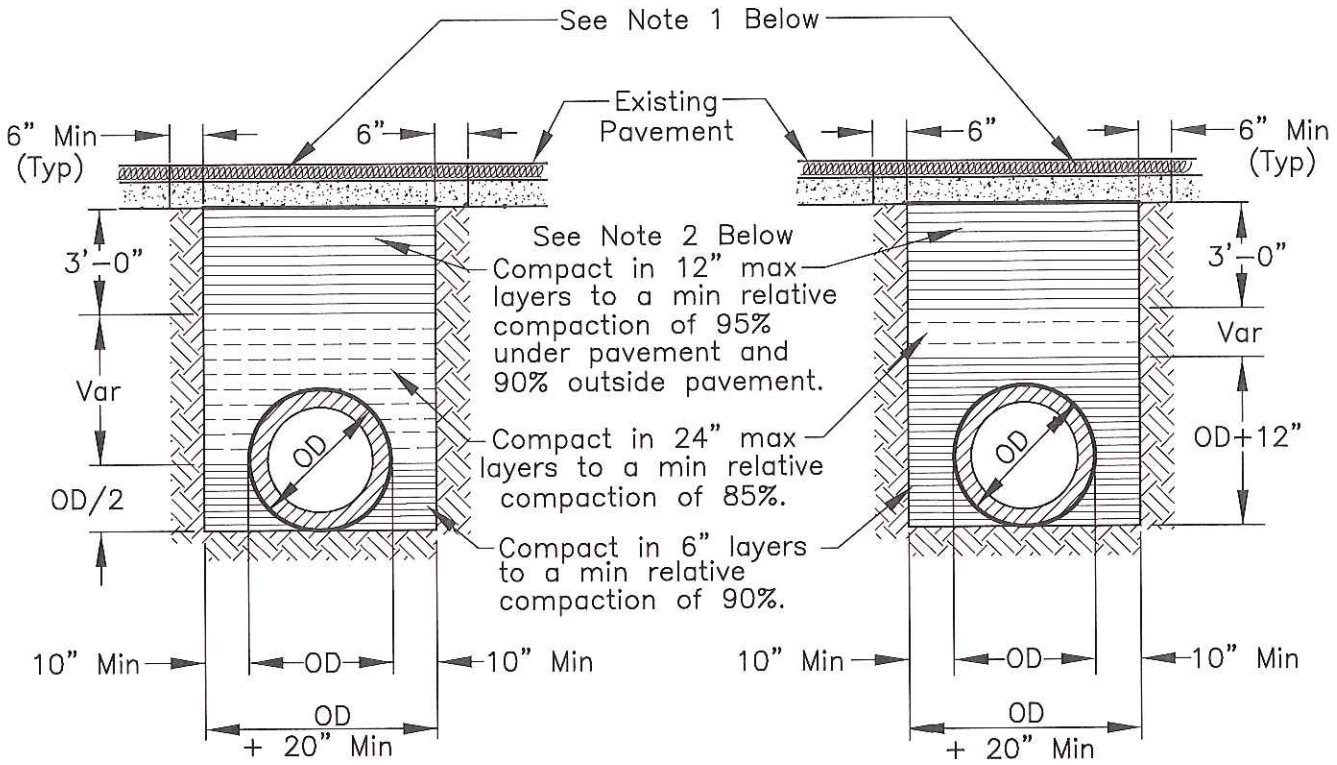

RIGID CONDUIT

FLEXIBLE CONDUIT

NOTES:

1. New pavement shall be 1" thicker than existing pavement, minimum of 0.25 Ft. New base shall be 1" thicker than existing base, min of 0.50 Ft.
2. Select native material or imported granular material as approved by the Director of Public Works. Backfill with materials equal to or better than the existing pavement and base in quality.
3. Relative compaction of materials shall be tested in accordance with the State of California, Dept. of Transportation Testing Manuals, test method No. California 216 or 231.
4. All existing pavement shall be neatly cut to line prior to trench excavation.
5. Jetting or ponding will be permitted within the street right-of-way with a 3 year bond, when approved by the Director of Public Works.
6. When shown by soil composition and compactability, ninety percent (90%) compaction may be used, when approved by the Director of Public Works.
7. Special bedding and backfill requirements may be shown on the plans or specified in the special provisions.

Public Works San Joaquin County
Working for YOU

TYPICAL TRENCH BACKFILL

COUNTY OF SAN JOAQUIN
DEPARTMENT OF PUBLIC WORKS

Date: DEC 2014

Approved by: Thomas M. Flow

No.	Revision Description	Date

Std. Dwg. No. **R-29**

GENERAL PROVISIONS
GOVERNING INSTALLATION OF SUBSURFACE STRUCTURES AND PIPELINES WITHIN COUNTY ROAD RIGHTS-OF-WAY

PUBLIC CONVENIENCE AND SAFETY:

A. Before obstructing any private driveway entrance or County road traveled way with a trench, spoil bank, equipment or other barrier permitted for any prolonged period of time, the Permittee shall notify the known users of the respective thoroughfare(s) involved, and shall provide access for vehicular and pedestrian traffic to and from the road.
   1. Unless otherwise permitted, all work shall be conducted in such a manner that no less than one lane of the existing County road traveled way will be maintained open to public traffic during working hours in a smooth and safe riding condition(s). Two lanes shall be open after working hours.
   2. In cases where road closure is permitted, the permission to close the road will be granted under the condition that the Permittee notify the following persons and/or agencies of the time, the period of closure, and the detour route at least twenty-four (24) hours prior to said road closure.
      a. The County of San Joaquin Public Works Department
      b. The County of San Joaquin Sheriff's Office
      c. The local postal service
      d. The local fire district
      e. The local school district
      f. The local residents involved

B. Should hazardous conditions relative to the installation operations warrant flagmen, as many capable flagmen as may be necessary shall be provided by the Permittee and stationed in advance of work to warn and direct traffic.

C. Lights, signs and barricades shall be furnished, erected and maintained by the Permittee for the adequate warning and convenience of the public, with particular attention to be taken in this regard after dark.

D. Any excess dirt and/or debris which might be a hazard to either automobile or pedestrian traffic, uncontrollable by lights, signs and barricades, shall be removed from the jobsite daily.

STRUCTURES:

A. Walls of structures shall be such quality and strength that they will resist all pressures and will not crack or be deformed in such a way as to create a hazard or maintenance problem at any time. Therefore, the minimum structural requirements for concrete pipe placed under county road rights-of-way shall conform to the following American Association of State Highway and transportation Officials (AASHTO) designations.
   1. For concrete pipe up to and including thirty-three inches (33") inside diameter, extra strength concrete conforming to AASHTO Designation M 170M.
   2. For concrete pipe thirty-six inches (36") inside diameter and larger, reinforced concrete pipe conforming to AASHTO Designation M 170M Class III.
   3. Plastic pipe conforming to AASHTO Designation M294.

B. All concrete pipe joints with County road rights-of-way shall be sealed against leakage and/or infiltration with rubber gasket in conformance with Section 65-1:06 of the California Standard Specifications, or with other methods as may be permitted under the Special Provisions.

C. Cast-in-place concrete pipe, vitrified clay pipe, spiral welded steel pipe, or corrugated aluminum alloy pipe shall not be installed within the County road rights-of-way unless specifically so stated in the Special Provisions, and only under the conditions as provided.

D. All structures to be buried within the County rights-of-way shall be set at such elevations as to allow minimum coverage of thirty inches (30") to the centerline of the roadways and twelve inches (12") at the bottoms of borrow ditches each side of the roadways. The depths of structures shall be established below a flat plane extending across the rights-of-way, no part of which shall extend above the elevations stated above; manholes, lampholes, valves, etc. not included. Future surface elevations shall be anticipated as nearly as possible and structure elevations shall be established for future adjustments accordingly.

E. The County hereby reserves the right to specify in the Special Provisions the gage and surface treatment of any galvanized corrugated metal pipe that is to be installed.

F. All longitudinal utility facilities are to be established (and dimensioned on sketches) from surveyed centerline of road right-of-way, not from right-of-way (border) lines.

REPAIRS OF THE COUNTY RIGHT-OF-WAY:

A. All excavations shall be backfilled and compacted immediately after work therein has been completed.

B. Trenched shall not be left open farther than 300 feet in advance of pipe laying operations, or 200 feet to the rear thereof, unless otherwise permitted by the Engineer.

C. Unless otherwise permitted under the Special Provisions, backfill shall be placed and mechanically compacted in such a manner that the relative compaction throughout the entire fill within the County road right-of-way shall conform to the percentages of compaction as shown on the Trench detail.

D. Backfill material shall be placed in horizontal uniform layers not to exceed in thickness, before compaction, 0.67 foot in the bedding region, one –foot where 90% compaction is required, and two-feet where 80% compaction is required.

E. No portion of the excavation(s) shall be compacted by ponding or jetting unless a maintenance bond is provided.

F. Gravel backfill material shall be utilized only where specifically so stated on the face of the permit. It shall be compacted by means of a high-frequency internal vibrator, the compactor to be a size and type approved by the Engineer. Points of compaction shall not be greater than 18" centers and to the full depth of the lift.

G. All pavements, curbs, gutters, sidewalks, borrow ditches, pipes, head walls, road signs, trees, shrubbery, and/or other permanent road facilities impaired by or as a result of construction operations at the construction site(s) occupied by materials and/or equipment, shall be restored immediately upon backfilling of the excavation to the original grades and cross sections, and to a condition as good as, or better than existing prior to construction.

H. All surfacing materials of roadways and driveway approaches cut or damaged by or as a result of construction operations, shall be replaced within ONE WEEK following the backfilling of excavation, weather permitting, with compacted layers of surfacing materials at least as thick as the existing, and no less than two inches (2") of asphalt concrete over six inches (6") of aggregate base, both as specified below.
   1. Asphalt Concrete: Combined mineral aggregate shall conform to the quality and gradation requirements for Type "A" one-half inch(1/2) maximum aggregate, coarse or medium gradation as specified in Section 39 of the California Standard Specifications. The bituminous binder to be mixed with mineral aggregate shall be paving asphalt having (Grade PG 64-10), unless otherwise directed by the Engineer. Placement of asphalt concrete surfacing shall conform to the applicable provisions of Section 39 of the California Standard Specifications.
   2. Aggregate Base: Combined mineral aggregates shall conform to the quality and the grading for three-quarter inch (3/4") maximum size aggregate Class 2 Aggregate Base specified in Section 26 of the California Standard Specifications.

I. Before acceptance of repairs to the County road rights-of-way, all unsightly and detrimental dirt, dust and/or debris shall be removed and the construction areas left in a neat and presentable condition(s).
   1. If necessary, County road traveled way and driveway pavements shall be washed with water to remove dirt and dust.
   2. Driveway approaches and field entrance pavements damaged by equipment or spoil banks shall be repaired as directed by the Engineer.

J. Upon request by the County, any settlement, sagging of surface, or cracking of pavement shall be repaired immediately by and at the sole expense of the Permittee for a period of one year following acceptance of the work.

SPECIAL PROVISIONS

Winter Weather Utility Work

---

1. **SUPERVISION:** The utility company (**permittee**) shall furnish full-time supervision of all work to insure compliance with the permit provision.

2. **START OF WORK:** No work within the County right-of-way shall be started until the utility company representative has made an evaluation of weather conditions and has determined the work can be accomplished under the provisions of the permit.

3. **CLEAN PAVEMENT:** Dirt and mud shall not be deposited on the pavement outside the area of work, and if inadvertently tracked onto the road travel way shall be removed immediately.

4. **DAILY RESTORATION:** Private driveways and road intersections shall be restored daily.

5. **WEATHER-TIGHT CONDITIONS:** All trenches shall be filled and compacted, ditches and other drainage facilities regarded and opened, and the entire work area restored to weather-tight condition prior to any rain.