COUNTY OF SAN JOAQUIN

DEPARTMENT OF PUBLIC WORKS
P.0. BOX 1810-1810 E. HAZELTON AVENUE
STOCKTON, CALIFORNIA 95201
(209) 468-3000
FAX # (209) 468-9324

Permit No: **PS-1902746**
Date Issued: 08/19/2019
Start Date: 08/25/2019
Exp. Date: 02/01/2020
Project No: PWP730052
Quad: SW

UE/CR/PM NO:43870135

ENCROACHMENT PERMIT

To: PACIFIC GAS & ELECTRIC - MODESTO
P.O. BOX 3031
MODESTO, CA 95353

Encroachment Type:

Bell Hole & Pavement	Restoration		

Location:
W/S OF GATEWAY BLVD. 15' S/O SCHULTE RD.

In compliance with your request of **08/19/2019** , permission is hereby granted to do work in County right-of-way as shown on attached application and subject to all the terms, conditions and restrictions written below or printed as general or special provisions on any part of this form. See reverse side and attached sheet, if any.

Trench excavations for service connections will not be permitted within ten feet (10') of pavement centerline unless otherwise approved by the Director. Surface of trench patches shall match in kind and be smooth and even with that of abutting surface. Special attention shall be given to depth of utilities through roadside area in anticipation of future drainage facilities, road profile and/or frontage development. All underground utility facilities are to be established and accurately dimensioned on sketches from surveyed centerline of road right of way, or from right of way (border) lines.

Permittee shall call the Department of Public Works, Field Engineering Division (Permit Inspections) at (209)953-7421 at least forty-eight hours prior to beginning any work within the County right of way. All work performed under this permit shall conform to the rules and regulations pertaining to safety established by the California Division of Industrial Safety and Cal-OSHA.

The jobsite shall be kept in a safe condition at all times by the daily removal of any excess dirt or debris which might be a hazard to either pedestrian or automobile traffic. All necessary traffic convenience and warning devices and personnel shall be provided, placed and maintained by and at the sole expense of the Permittee in accordance with the latest edition of the CALTRANS Manual of Traffic Control.

After completion of the work permitted herein, all debris, lumber, barricades, or any excess material shall be removed and the jobsite left in a neat workmanlike manner. Immediately following completion of construction permitted herein, Permittee shall fill out and mail notice of completion (see attached post card) provided by Grantor.

Special Comments:

Traffic Control Per MUTCD*****See Attached "Special Conditions"*****

FORMS:	SS/WW, R-29	Trench Cut	Policy

Est. Permit Fee: $490.00

KRIS BALAJI, Director
Department of Public Works

By: _____
Permit Section

WHITE	-Permittee
GOLDENROD	-PWD Central File
YELLOW	-Field Inspection
PINK	-Permit Section

ENCROACHMENT PERMIT GENERAL PROVISIONS

13-1

1. This permit is issued under and subject to all laws and ordinances of agencies governing the encroachment herein permitted. See the following references:
   STREETS AND HIGHWAYS CODE
   1. Division 1, Chapter 3
   2. Division 2, Chapter 2, Section 942
   3. Division 2, Chapter 4, Section 1126
   4. Division 2, Chapter 5.5 and Chapter 6

   SAN JOAQUIN COUNTY ORDINANCES NUMBERED: 324, 441, 648, 662, 672, 695, 700, 860, 892, 3359, and 3675.

2. It is understood and agreed by the Permittee that the performance of any work under this permit shall constitute an acceptance of all the provisions contained herein and failure on the Permittee's part to comply with any provision will be cause for revocation of this permit. Except as otherwise provided for public agencies and franchise holders, this permit is revocable on five days notice.

3. All work shall be done subject to the supervision of and the satisfaction of the grantor. The Permittee shall at all times during the progress of the work keep the County Highway in as neat and clean condition as is possible and upon completion of the work authorized herein, shall leave the County Highway in a thoroughly neat, clean and usable condition.

4. The Permittee also agrees by the acceptance of this permit to properly maintain any encroachment structure placed by the Permittee on any part of the County Highway and to immediately repair any damage to any portion of the highway, which occurs as a result of the maintenance of the said encroachment structure, until such time as the Permittee may be relieved of the responsibility for such maintenance by the County of San Joaquin.

5. The Permittee also agrees by the acceptance of this permit to make, at its own expense, such repairs as may be deemed necessary by the County Department of Public Works.

6. It is further agreed by the Permittee that whenever construction, reconstruction or maintenance work upon the highway is necessary, the installation provided for herein shall, upon request of the County Department of Public Works, be immediately moved or removed by and at the sole expense of the Permittee.

7. No material used for fill or backfill in the construction of the encroachment shall be borrowed or taken from within the County right of way.

8. All work shall be planned and carried out with as little inconvenience as possible to the traveling public. No material shall be stacked within eight feet (8') of the edge of the pavement or traveled way unless otherwise provided herein. Adequate provision shall be made for the protection of the traveling public. Traffic control standards shall be utilized including barricades; approved signs and lights; and flagmen, as required by the particular work in progress.

9. The Permittee, by the acceptance of this permit, shall assume full responsibility for all liability for personal injury or damage to property which may arise out of the work herein permitted or which may arise out of the failure of the part of the Permittee to properly perform the work provided under this permit. In the event any claim of such liability is made against the County of San Joaquin or any department, official or employee thereof, the Permittee shall defend, indemnify, and hold each of them harmless for such claim.

10. All backfill material is to be moistened as necessary and thoroughly compacted with mechanical means. If required by the County Director of Public Works, such backfill shall consist of gravel or crushed rock. The Permittee shall maintain the surface over structures placed hereunder as may be necessary to insure the return of the roadway to a completely stable condition and until relieved of such responsibility by the County Department of Public Works. Wherever a gravel, crushed rock or asphalt surface is removed or damaged in the course of work related to the permitted encroachment, such material shall either be separately stored and replaced in the roadway as nearly as possible in its original state or shall be replaced in kind, and the roadway shall be left in at least as good a condition as it was before the commencement of operations of placing the encroachment structure.

11. Whenever it becomes necessary to secure permission from abutting property owners for the proposed work, such authority must be secured by the Permittee prior to starting work.

12. The current and future safety and convenience of the traveling public shall be given every consideration in the location and methods of construction utilized.

13. The Permittee is responsible for the preservation of survey monuments located within the area of work herein permitted. Prior to the start of construction, survey monuments that potentially may be disturbed shall be located and referenced by a Licensed Land Surveyor, and a Corner Record filed with the County Surveyor. Any Survey Monuments disturbed during the course of construction shall be reestablished by a Licensed Land Surveyor and another Corner Record filed with the County Surveyor. (Land Surveyors' Act Section 8771)

14. Prior to any excavation, the Permittee shall notify USA North (Underground Service Alert of Northern California and Nevada) at 811 or 800-227-2600 forty-eight (48) hours in advance.

SPECIAL CONDITIONS FOR
PG&E – GATEWAY BLVD. – PM# 43870135
ENCROACHMENT PERMIT

1. Maintain traffic controls for all roads. Traffic control delays shall not exceed 10 minutes. Two-way traffic shall be maintained during non-working hours with excavated areas backfilled or plated. During working hours, two-way traffic control shall be maintained with one lane open and appropriate flaggers.

2. Access to all properties shall be maintained at all times except when work is occurring at the access point. Minimal delays will be allowed to provide access within the work zone area. Driveway access shall be fully restored at the end of each workday. Driveways disturbed by the contractor shall be replaced with in-kind or better materials.

3. Residents and businesses shall be notified in writing, as approved by the County, 48 hours in advance of any impacts to their access.

4. Any areas where parking is to be restricted shall have signs noting the restrictions in place at least 48 hours in advance.

5. School Buses shall be passed through the work zone with minimal delays.

6. Work shall not be permitted within the San Joaquin County right-of-way between November 1 and March 31 without prior authorization from the San Joaquin County Department of Public Works Field Engineering Division, contact them at 209-953-7421.

7. All destroyed or obliterated pavement markings must be replaced in kind by the permittee. Typical pavement markings include but not limited to lane lines, centerlines, stop and stop ahead legends, limit lines, raised pavement markers and miscellaneous delineators.

8. The Permittee is responsible for the preservation of survey monuments located within the area of work herein permitted. Prior to the start of construction, survey monuments that potentially may be disturbed shall be located and referenced by a Licensed Land Surveyor, and a Corner Record filed with the County Surveyor. Any Survey Monuments disturbed during the course of construction shall be reestablished by a Licensed Land Surveyor and another Corner Record filed with the County Surveyor. (Land Surveyors' Act Section 8771)

9. All pipe and pipeline related facilities including, but not limited to, valves, utility boxes and vaults, and frames and covers shall be maintained by PG&E, including any facilities that are abandoned in place. PG&E shall be responsible for any and all costs associated with the removal, relocation and/or adjustment of these facilities as determined by the County at PG&E's expense. (Streets and Highways Code Section 1463)

10. All future maintenance of the pipeline and related facilities within the County right-of-way will require a San Joaquin County Encroachment Permit.

11. Trenches/bell holes shall be maintained in a smooth and even condition to the satisfaction of the County throughout the project limits at all times.

12. All trenches/bell holes shall be completely backfilled or shored and plated at the end of each workday, and the roadway restored to two-way traffic. If plating is to be used, a trench shoring and plating plan suitable for traffic loadings shall be prepared by a registered civil engineer and submitted for prior approval by the County.

13. The contractor shall use San Joaquin County Improvement Standard R-29 when backfilling trenches/bell holes within the County right-of-way. Where the existing road structural section is below standard, a minimum section of 3 inches of asphalt concrete over 8 inches of aggregate base shall be required.

14. Gateway Boulevard subject to pavement cuts shall receive a Type II Slurry Seal Coat as per San Joaquin County Department of Public Works Improvement Standards Section 2-5.0 Trench Cut Policy. Shoulder areas shall be brought up to the finish grade as directed by the County.

15. Final paving for trench repair or road resurfacing shall be per Caltrans' specifications and shall not occur between November 1 and March 31, without prior authorization from the San Joaquin County Department of Public Works Field Engineering Division, contact them at 209-953-7421.

16. No paving joints are allowed within paved shoulder; contractor shall pave all the way to outer edge of paved shoulder.

17. Class II Aggregate Base shoulder backing is required from the edge of pavement, a minimum of 4-inches thick by 4-feet wide.

18. Contractor shall establish existing roadway and drainage grades within the construction area. Any repair to roadways and adjacent areas shall match existing grades. Any proposed grade changes shall receive prior approval from County.

19. Above ground vaults, panels and/or other similar facilities will be allowed within the right-of-way if located as far to the outside edge as possible. Utility vaults shall be located a minimum of 4'-0" from edge of pavement.

20. County roads shall be kept clean from mud and debris at all times along the access points and work zone areas during entire project. All standard roadway striping and signage shall be clearly visible, maintained and restored throughout the construction zone during and after the project.

21. In addition to standard dust control measures, streets shall be maintained in a clean condition, free of dirt, mud and debris during construction activities. The contractor shall provide daily, and as determined to be necessary by County inspectors, street sweeping using a modern mechanical or vacuum-assisted street sweeper.

22. The contractor shall not conduct construction operations in rain or heavy fog conditions.

APPLICATION FOR ENCROACHMENT PERMIT

PLEASE PRINT:

Date 8/7/19

To: San Joaquin County
Department of Public Works

PG&E PM 43870135
(Applicant Name)

1524 N Carpenter Rd
(Mailing Address)

Modesto, CA 95351
(City, State, Zip Code)

209-857-0181
(Area Code - Telephone Number)

WAT8@PGE.COM
(Email Address)

OFFICE USE ONLY

JOB #	730052-4	REF #	
APN		CR #	
EXP. DATE	2/1/20		
VALID	8/25/19 TO 2/1/20	DRIVEWAYS:	
STREET	Gateway Blvd.	*	
AREA	Tracy QUAD SW	*	
TYPE	Bell Hole - Pavement Restoration		
FORMS	SS/WW, R-29 Trench Cut Policy		
NOTES	"Special Conditions"		

Sketch (Detailed plans may be submitted)

Crew to call SJ County Inspector at (209) 953-7421 **48** to **72** hours **before** work starts.
When calling, crew shall request "rain clearance" for any work during winter months
November through March

The undersigned hereby applies for permission to excavate, construct and/or otherwise encroach on County Highway Right-of-Way on the West side of Gateway Blvd approximately 15' feet/mile South of W Shulte Rd, Tracy, by performing the following work (description of work):

Restore pavement after emergency gas leak

Work will commence on or after 8/25/19 - 12/25/19 for approximately 6 months days.

I, the undersigned, certify that I am the owner of the respective property, or am qualified to represent the owner and agree to do the work described above in accordance with the rules and regulations of San Joaquin County and subject to inspection and approval.

Walther Tigerino
Signature of Applicant - Title

8/7/19
Date

Y:\FORMS & TEMPLATES\ENCROACHMENT PERMIT APPLICATION.doc (08/08)

SAN JOAQUIN COUNTY
Greatness grows here.

Public Works
San Joaquin County
Working for YOU

Department of Public Works
Kris Balaji, Director of Public Works
Fritz Buchman, *Deputy Director/Development*
Michael Selling, *Deputy Director/Engineering*
Jim Stone, *Deputy Director/Operations*
Kristi Rhea, *Manager of Strategic Initiatives*

Acknowledgement of Monument Preservation

I, Brett Brusatori, a duly Licensed Land Surveyor or a Professional Engineer
(Please print)

authorized to perform Land Surveying in the State of California, Registration No. 8775,

hereby acknowledge and accept all responsibility for the monument preservation as required per Section 8771(a-f) of the Business and Professions Code within the bounds of the construction activity permitted by San Joaquin County Permit No. PS-19027946. PM# 43870135

I further acknowledge that I am hereby responsible for the Acknowledgement of Monument Preservation prior to final acceptance of the construction activity.

*no monuments in the vicinity of work

Signature

Seal

PROFESSIONAL LAND SURVEYOR
BRETT G. BRUSATORI
No. 8775
STATE OF CALIFORNIA

8/7/19
Date

PS-MONUMENT PRESERVATION

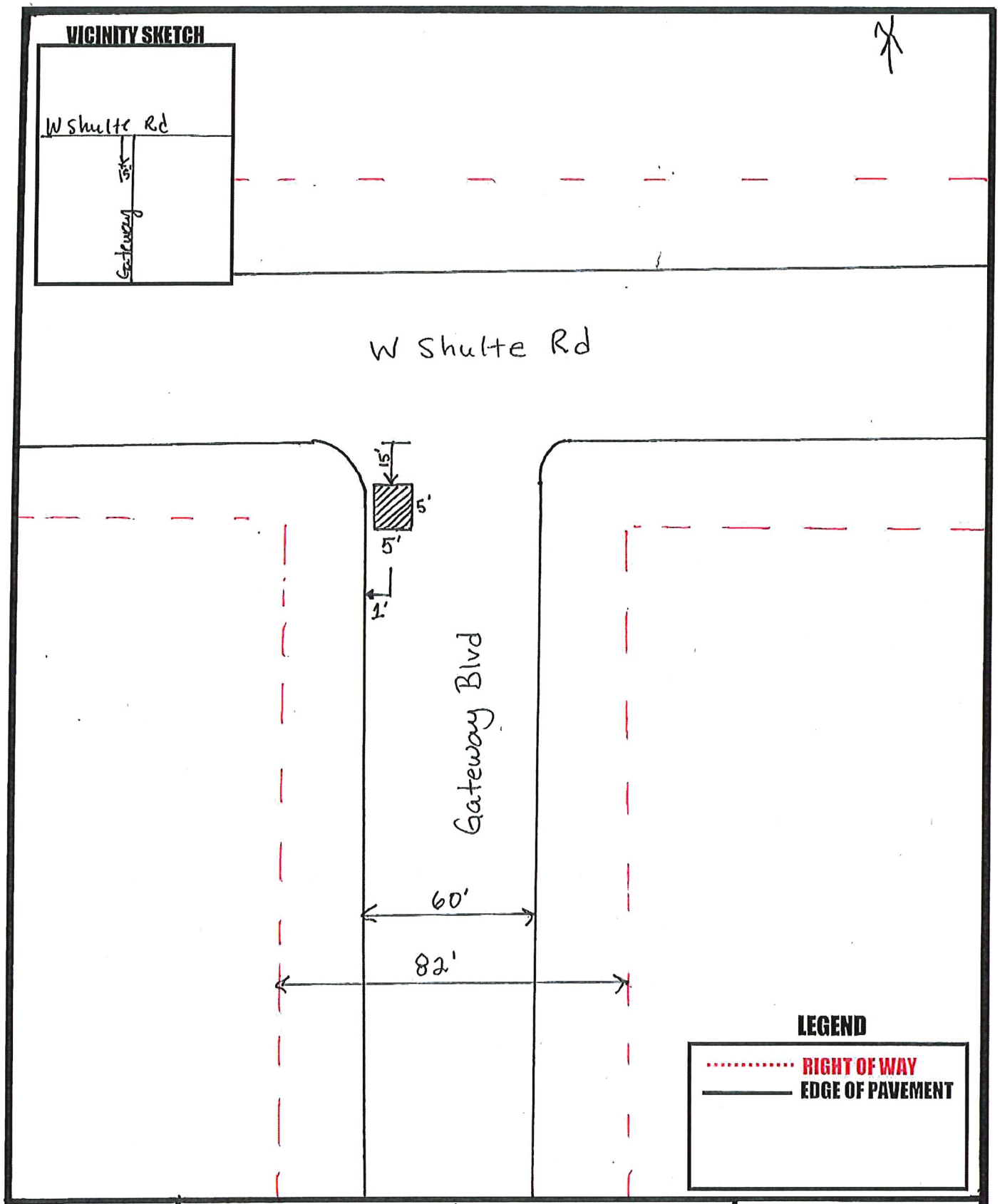

PG&E

PERMIT SKETCH

Restore Pavement

PM 43870135

TRAFFIC MANAGEMENT INCORPORATED

PG&E

GENERAL NOTES

1	THIS PLAN CONFORMS TO THE CA MUTCD, LATEST EDITION.
2	THE LOCATION OF THE SIGNS SHOWN ON THE PLAN ARE GUIDELINES AND THE ACTUAL LOCATION WILL DEPEND UPON ALIGNMENT, GRADE, LOCATION OF THE STREET INTERSECTIONS, AND 85TH PERCENTILE SPEED.
3	NOTIFY LOCAL LAW ENFORCEMENT, FIRE, AND AMBULANCE COMPANIES WITHIN 72 HOURS BEFORE CONSTRUCTION BEGINS. KEEP OPEN ACCESS FOR EMERGENCY VEHICLES AT ALL TIMES.
4	CONTINUAL MONITORING AND MAINTENANCE OF THE TRAFFIC CONTROL ZONE WILL BE IMPLEMENTED FOR THE PURPOSE OF MAINTAINING EMERGENCY ACCESS, AND TO PROVIDE ACCOMMODATIONS FOR PEDESTRIANS, BICYCLE TRAFFIC AND THE DISABLED.
5	PROPERLY TRAINED TRAFFIC CONTROLLERS, PROPER DEVICES, & PROPER USE OF THE DEVICES ARE REQUIRED AT ALL TIMES.
6	ALL SIGNS IMPLEMENTED WILL ONLY BE VIEWABLE WHEN IN USE, OTHERWISE ALL WARNING DEVICES ARE TO BE TAKEN DOWN OR COVERED.
7	NOTHING WILL BE ALLOWED IN BUFFER/TRANSITION AREA(S) AT ANY TIME.
8	ALL CONFLICTING MARKINGS ARE TO BE REMOVED FOR PROJECTS THAT LAST THREE (3) CONTINUOUS DAYS OR LONGER.
9	ALL SIGNAGE AND CHANNELIZING DEVICES MUST BE RETROREFLECTIVE OR ILLUMINATED DURING THE NIGHT. MINIMUM VISIBILITY SHALL BE 1000 FEET.
10	ONLY ONE SIDEWALK WILL BE CLOSED AT A TIME. PEDESTRIAN AND DISABLED ACCESS TO BE MAINTAINED PER CA MUTCD STANDARDS.
11	CONTACT UNDERGROUND SERVICE ALERT (USA) 48 HOURS PRIOR TO ANY EXCAVATION FOR POTENTIAL UTILITY CONFLICTS.

RECOMMENDED ADVANCE WARNING SIGN SPACING TABLE

(CA MUTCD 2014, REV 3 EDITION, TABLE 6C-1. SEE TABLE FOR ADDITIONAL DETAILS)

ROAD TYPE	DISTANCE BETWEEN SIGNS (FT)		
	A	B	C
URBAN - 25 MPH OR LESS	100	100	100
URBAN - 30 MPH TO 40 MPH	250	250	250
URBAN - 45 MPH AND ABOVE	350	350	350
RURAL	500	500	500
EXPRESSWAY / FREEWAY	1000	1500	2640

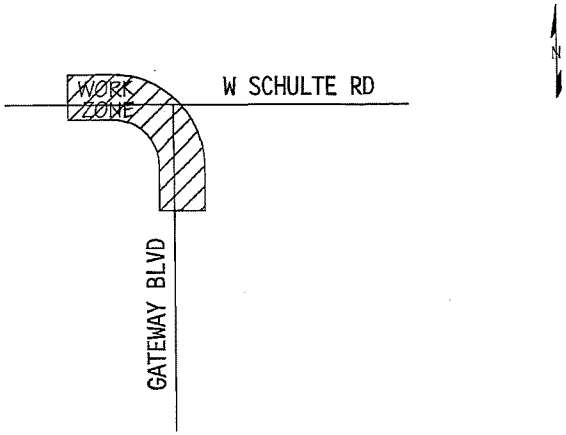

LEGEND	
- WORK AREA	- TYPE-III BARRICADE W/ SIGN
- HIGH LEVEL WARNING DEVICE	- TYPE-II BARRICADE W/ SIGN
- FLASHING ARROW SIGN (FAS)	- ADA BARRICADE W/ SIGN
- FLAGGER	- CHANNELIZATION DEVICE
- EXISTING SIGN	- SIGN

ADDRESS

25521 GATEWAY BLVD,
TRACY

WORK AREA TRAFFIC CONTROL: 25521 GATEWAY BLVD

CONTACT: WALTHER TIGERINO
CONTACT: (209) 857-0181
JOB NUMBER: 171751 PLAN#: 48882
PM#43870135
COVER SHEET SIZE: B SCALE: N.T.S.
DATE: 7/15/19 PREPARED BY: DGZ

TRAFFIC MANAGEMENT, INC.
California · Great Lakes · New York
800.763.3999
www.trafficmanagement.com
Traffic Control Services - Sales & Rentals
Permits & Consulting - Engineering - Training
C31 # 785804

ALL DRIVEWAYS TO REMAIN OPEN UNLESS OTHERWISE INDICATED.

FLAGGERS TO ASSIST WITH PEDESTRIAN TRAFFIC.

POST TEMPORARY "NO PARKING" IN ALL AREAS AFFECTED BY THE WORK AREA 72 HRS PRIOR TO WORK. NOTIFY ALL AFFECTED BUSINESSES/RESIDENTS.

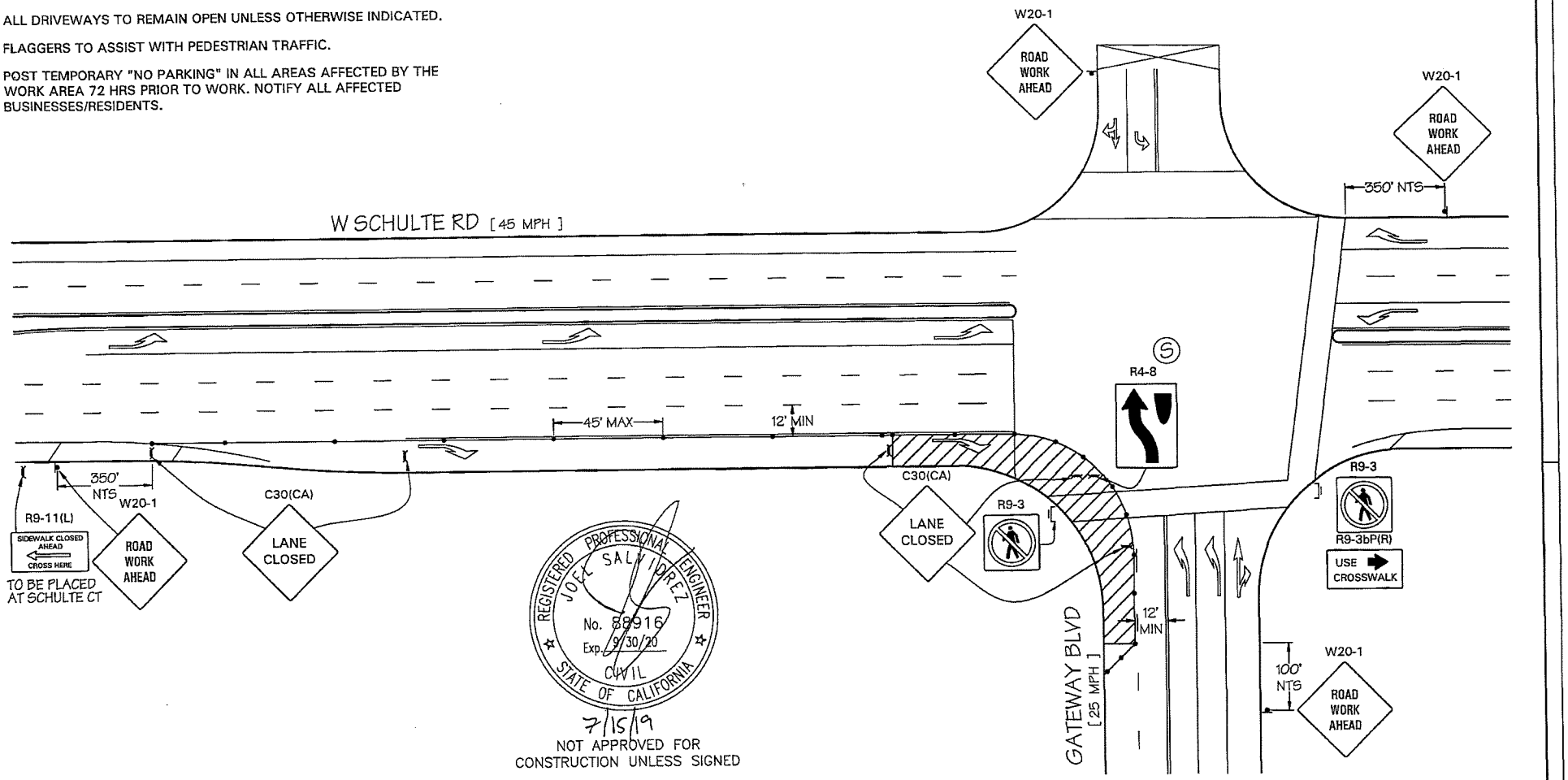

REGISTERED PROFESSIONAL ENGINEER
JOEL SALVADREZ
No. 88916
Exp. 9/30/20
CIVIL
STATE OF CALIFORNIA

7/15/19

NOT APPROVED FOR CONSTRUCTION UNLESS SIGNED

LEGEND		ADDRESS
- WORK AREA	- TYPE-III BARRICADE W/ SIGN	25521 GATEWAY BLVD, TRACY
- HIGH LEVEL WARNING DEVICE	- TYPE-II BARRICADE W/ SIGN	
- FLASHING ARROW SIGN (FAS)	- ADA BARRICADE W/ SIGN	
- FLAGGER	- CHANNELIZATION DEVICE	
- EXISTING SIGN	- SIGN	

N

WORK AREA TRAFFIC CONTROL: 25521 GATEWAY BLVD

CONTACT: WALTHER TIGERINO

CONTACT: (209) 857-0181

JOB NUMBER: 171751 PLAN#: 48882

PM#43870135

SHEET 1 OF 1 SIZE: B SCALE: 1"=40'

DATE: 7/15/19 PREPARED BY: DGZ

TRAFFIC MANAGEMENT, INC.

California · Great Lakes · New York

800.763.3999

www.trafficmanagement.com

Traffic Control Services - Sales & Rentals

Permits & Consulting - Engineering - Training

C31 # 785804

* 2-5.0 TRENCH CUT POLICY

* 2-5.01 General Requirements

A. Resurfacing requirements specified in this policy are in addition to the trench resurfacing requirements specified by County Standard Drawing No. R-29.

B. For the purpose of this policy, "Surfacing Age" is defined as the age of the most recently completed roadway surfacing, including construction, reconstruction, or major overlay.

C. Where the application of seal coats is required, a Type II Slurry Seal will be used in accordance with State Standard Specifications, Section 37-2.

D. The permittee must post a one-year maintenance bond or cash deposit, in an amount specified by the Department.

E. All pavement markings destroyed or obliterated must be replaced in kind by the permittee. Typical pavement markings include, but are not limited to, lane lines, centerlines, stop and stop ahead legends, limit lines, raised pavement markers, and miscellaneous delineators.

F. The permittee is responsible for Survey Monuments disturbed by trenching and is required to file a corner record and to reestablish them using a Licensed Land Surveyor after the trench restoration is completed.

G. Functional classification maps and Public Works Project Advertising Schedules are references for this policy.

H. To facilitate scheduling and planning, Public Works staff will make available the most current Project Advertising Schedule at the monthly Utility Coordination Meeting and make it available to the public, at the Permits Counter, in January each year.

2-5.02 Collectors, Arterials and Expressways

A. Surfacing Age less than Three (3) Years: No pavement cuts. Exceptions may be approved in accordance with Section 2-5.04 EXCEPTIONS.

B. Surfacing Age Three (3) Years and Over:

1. Longitudinal Trench Cutting in Paved Shoulder

Areas:
The entire shoulder of the road is to be resurfaced. The existing surfacing adjacent to the trenched area shall be planed to accommodate the overlay in a manner that does not cause drainage concerns. The nearest pavement cut shall be a minimum of three (3) feet from the edge of pavement, or the remaining pavement shall also be removed and replaced. (See County Standard Drawing No. R-37).

2. Longitudinal Trenches within Traveled Lanes:

   The entire traveled lane where the trench is located is to be resurfaced with a one (1) inch asphalt concrete overlay. The existing surfacing adjacent to the trenched area shall be planed to accommodate the overlay in a manner that does not cause drainage concerns. The overlay shall be in accordance with State Standard Specifications, Section 39. Aggregate gradation shall be consistent with the existing surfacing material. (See County Standard Drawing No. R-37).

3. Cross-Cutting:

   Cross-cutting is allowed at a minimum interval of 150 feet. At each cross-cut location a minimum of ten (10) feet on each side of trench shall be planed and resurfaced with one (1) inch asphalt concrete. If cross cuts are within the 150 feet minimum interval, the entire section between the first and last cross cut shall be planed and resurfaced with one (1) inch asphalt concrete. (See County Standard Drawing No. R-36).

4. The conditions described in paragraphs 1, 2 and 3 above will not apply if resurfacing is scheduled within two years.

* 2-5.03 Local Roads

A. Surfacing Age Under Three (3) years: No pavement cuts allowed. Exceptions may be approved in accordance with Section 2-5.04 EXCEPTIONS.

* B. Surfacing Age Three (3) to Five (5) Years:

1. Longitudinal cuts are permitted. A seal coat is required for that half of the roadway containing the trench. (See County Standard Drawing No. R-37).

2. Cross-cutting is allowed under the same conditions as Section 2-5.02(B)(3). If cross-cuts occur within the 150 feet minimum interval, resurfacing may be substituted with a slurry seal for that half of the roadway. (See County Standard Drawing No. R-36).

2-5.04 Exceptions

Excavation is prohibited in newly renovated County roadways for three (3) years after a notice of completion has been filed for a roadway improvement project, or a new roadway has been accepted. The Director of Public Works may approve exceptions that are in the best interest of the public, including but not limited to:

A. An emergency that endangers life or property.

B. For repair or modification to prevent interruption of essential utility service.

C. For relocation work that is mandated by County, State or Federal law.

D. For service for buildings where no other reasonable means of providing service exists.

E. For potholing to verify utility depth or location.

F. For trenchless excavations greater than three feet in depth of cover over the utility facility, and not requiring a significant surface Incision greater than industry bore pit standards.

Exceptions must be requested and submitted in writing to the Department. Payment of a nonrefundable processing fee is also required. Exceptions will be reviewed using the Departments Action Approval process, which requires the recommendation of a Deputy Director.

NOTES:

1. If the distance between cross–cuts are less then 150' the entire area between corss–cuts shall be planed and resurfaced with one (1) inch of Asphalt Concrete.
2. The resurfacing requirements shall be in addition to County Standard Drawing No. R–29.
3. Resurfacing for Bell Holes shall meet these requirements. If excavation occurs within the shoulder or lane, only that area shall be resufaced as shown.
4. If cross–cutting is performed on Local Roads at intervals less then 150' a Seal Coat for that half of the roadway containing the trench can be used in lieu of resurfacing. Section 2–5.03 (B–2).

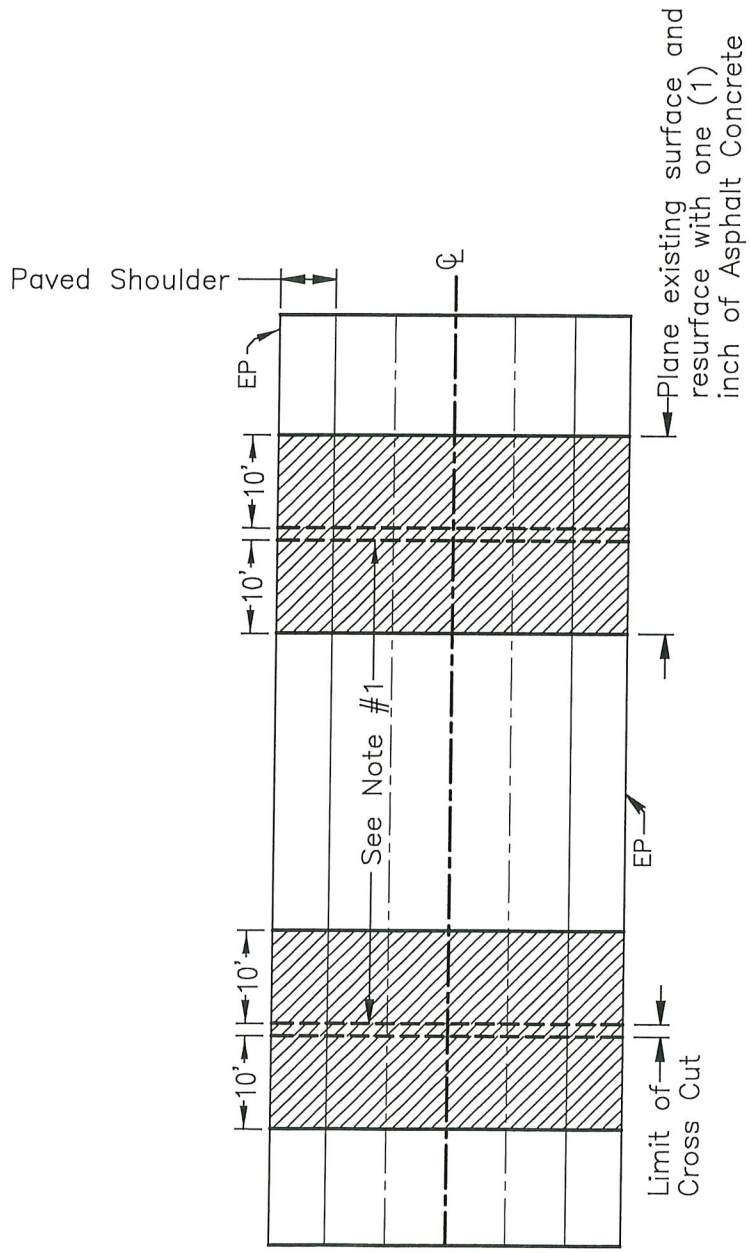

Public Works
San Joaquin County
Working for YOU

TRENCH CUTTING POLICY CROSS CUTTING OF COUNTY ROADWAYS

COUNTY OF SAN JOAQUIN
DEPARTMENT OF PUBLIC WORKS

Date: DEC 2014

Approved by:

No.	Revision Description	Date

Std. Dwg. No. **R-36**

NOTES:

1. The resurfacing requirements shall be in addition to County Standard Drawing No. R–29.
2. If longitudinal cuts are required on a Local Road a Seal Coat can be used for that half of the roadway containing the trench. Section 2–5.03 (B–1).

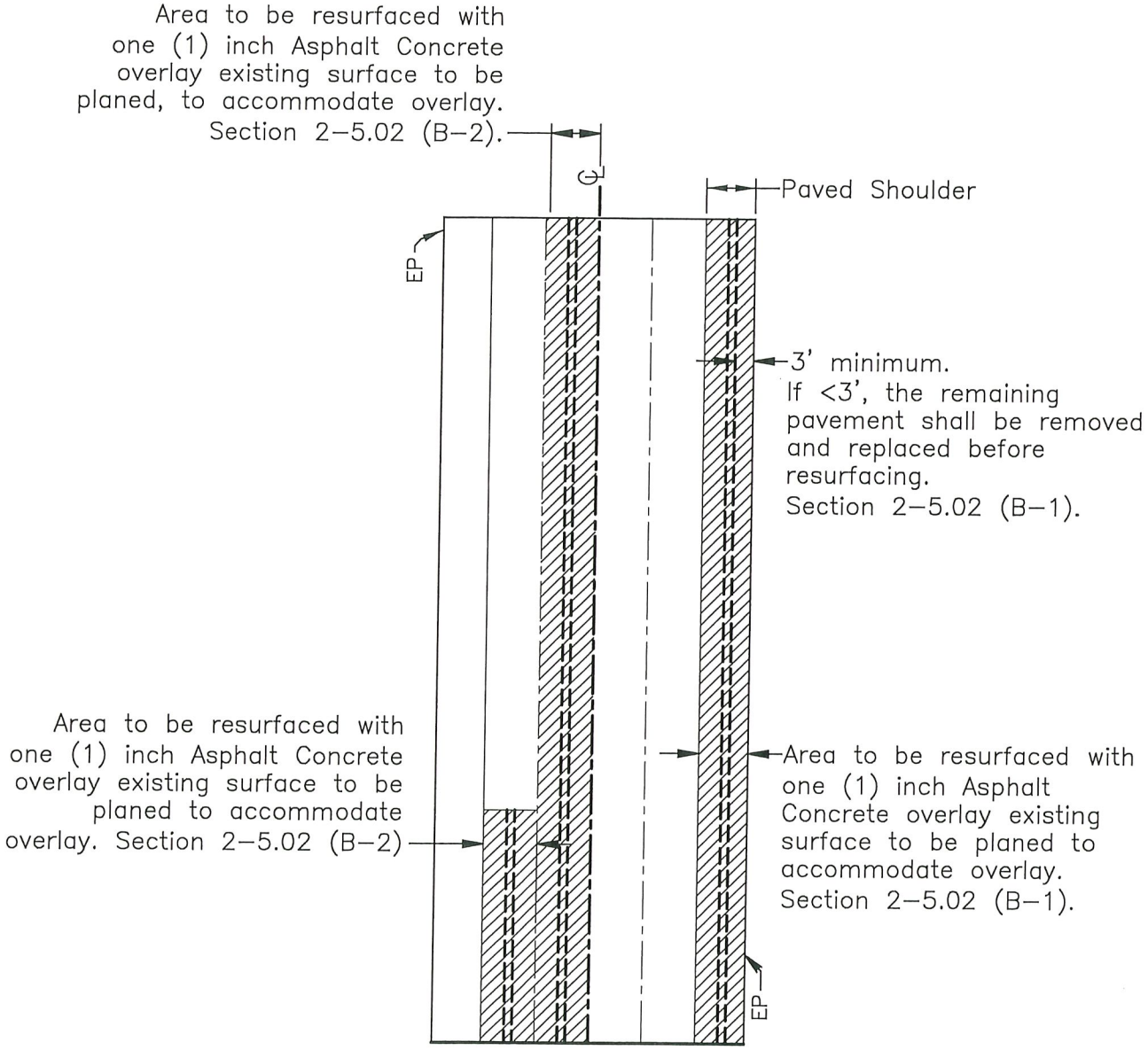

Public Works San Joaquin County
Working for YOU

TRENCH CUTTING POLICY LONGITUDINAL CUTTING OF COUNTY ROADWAYS

COUNTY OF SAN JOAQUIN
DEPARTMENT OF PUBLIC WORKS

Date: DEC 2014

Approved by:

No.	Revision Description	Date

Std. Dwg. No. **R-37**

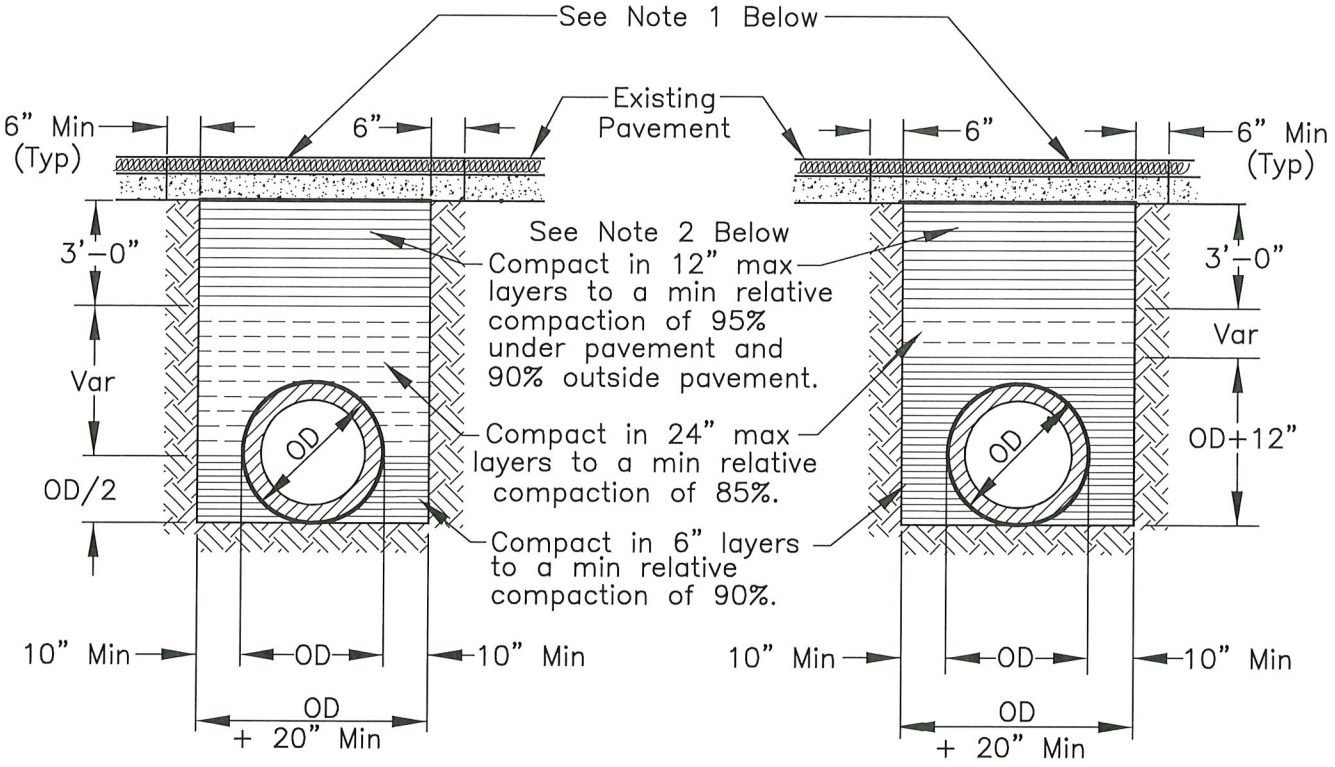

RIGID CONDUIT

FLEXIBLE CONDUIT

NOTES:

1. New pavement shall be 1" thicker than existing pavement, minimum of 0.25 Ft. New base shall be 1" thicker than existing base, min of 0.50 Ft.
2. Select native material or imported granular material as approved by the Director of Public Works. Backfill with materials equal to or better than the existing pavement and base in quality.
3. Relative compaction of materials shall be tested in accordance with the State of California, Dept. of Transportation Testing Manuals, test method No. California 216 or 231.
4. All existing pavement shall be neatly cut to line prior to trench excavation.
5. Jetting or ponding will be permitted within the street right-of-way with a 3 year bond, when approved by the Director of Public Works.
6. When shown by soil composition and compactability, ninety percent (90%) compaction may be used, when approved by the Director of Public Works.
7. Special bedding and backfill requirements may be shown on the plans or specified in the special provisions.

Public Works San Joaquin County
Working for YOU

TYPICAL TRENCH BACKFILL

COUNTY OF SAN JOAQUIN
DEPARTMENT OF PUBLIC WORKS

Date: DEC 2014

Approved by: Thomas M. Flow

No.	Revision Description	Date

Std. Dwg. No. **R-29**

GENERAL PROVISIONS
GOVERNING INSTALLATION OF SUBSURFACE STRUCTURES AND PIPELINES WITHIN COUNTY ROAD RIGHTS-OF-WAY

PUBLIC CONVENIENCE AND SAFETY:

A. Before obstructing any private driveway entrance or County road traveled way with a trench, spoil bank, equipment or other barrier permitted for any prolonged period of time, the Permittee shall notify the known users of the respective thoroughfare(s) involved, and shall provide access for vehicular and pedestrian traffic to and from the road.
   1. Unless otherwise permitted, all work shall be conducted in such a manner that no less than one lane of the existing County road traveled way will be maintained open to public traffic during working hours in a smooth and safe riding condition(s). Two lanes shall be open after working hours.
   2. In cases where road closure is permitted, the permission to close the road will be granted under the condition that the Permittee notify the following persons and/or agencies of the time, the period of closure, and the detour route at least twenty-four (24) hours prior to said road closure.
      a. The County of San Joaquin Public Works Department
      b. The County of San Joaquin Sheriff's Office
      c. The local postal service
      d. The local fire district
      e. The local school district
      f. The local residents involved

B. Should hazardous conditions relative to the installation operations warrant flagmen, as many capable flagmen as may be necessary shall be provided by the Permittee and stationed in advance of work to warn and direct traffic.

C. Lights, signs and barricades shall be furnished, erected and maintained by the Permittee for the adequate warning and convenience of the public, with particular attention to be taken in this regard after dark.

D. Any excess dirt and/or debris which might be a hazard to either automobile or pedestrian traffic, uncontrollable by lights, signs and barricades, shall be removed from the jobsite daily.

STRUCTURES:

A. Walls of structures shall be such quality and strength that they will resist all pressures and will not crack or be deformed in such a way as to create a hazard or maintenance problem at any time. Therefore, the minimum structural requirements for concrete pipe placed under county road rights-of-way shall conform to the following American Association of State Highway and transportation Officials (AASHTO) designations.
   1. For concrete pipe up to and including thirty-three inches (33") inside diameter, extra strength concrete conforming to AASHTO Designation M 170M.
   2. For concrete pipe thirty-six inches (36") inside diameter and larger, reinforced concrete pipe conforming to AASHTO Designation M 170M Class III.
   3. Plastic pipe conforming to AASHTO Designation M294.

B. All concrete pipe joints with County road rights-of-way shall be sealed against leakage and/or infiltration with rubber gasket in conformance with Section 65-1:06 of the California Standard Specifications, or with other methods as may be permitted under the Special Provisions.

C. Cast-in-place concrete pipe, vitrified clay pipe, spiral welded steel pipe, or corrugated aluminum alloy pipe shall not be installed within the County road rights-of-way unless specifically so stated in the Special Provisions, and only under the conditions as provided.

D. All structures to be buried within the County rights-of-way shall be set at such elevations as to allow minimum coverage of thirty inches (30") to the centerline of the roadways and twelve inches (12") at the bottoms of borrow ditches each side of the roadways. The depths of structures shall be established below a flat plane extending across the rights-of-way, no part of which shall extend above the elevations stated above; manholes, lampholes, valves, etc. not included. Future surface elevations shall be anticipated as nearly as possible and structure elevations shall be established for future adjustments accordingly.

E. The County hereby reserves the right to specify in the Special Provisions the gage and surface treatment of any galvanized corrugated metal pipe that is to be installed.

F. All longitudinal utility facilities are to be established (and dimensioned on sketches) from surveyed centerline of road right-of-way, not from right-of-way (border) lines.

REPAIRS OF THE COUNTY RIGHT-OF-WAY:

A. All excavations shall be backfilled and compacted immediately after work therein has been completed.

B. Trenched shall not be left open farther than 300 feet in advance of pipe laying operations, or 200 feet to the rear thereof, unless otherwise permitted by the Engineer.

C. Unless otherwise permitted under the Special Provisions, backfill shall be placed and mechanically compacted in such a manner that the relative compaction throughout the entire fill within the County road right-of-way shall conform to the percentages of compaction as shown on the Trench detail.

D. Backfill material shall be placed in horizontal uniform layers not to exceed in thickness, before compaction, 0.67 foot in the bedding region, one –foot where 90% compaction is required, and two-feet where 80% compaction is required.

E. No portion of the excavation(s) shall be compacted by ponding or jetting unless a maintenance bond is provided.

F. Gravel backfill material shall be utilized only where specifically so stated on the face of the permit. It shall be compacted by means of a high-frequency internal vibrator, the compactor to be a size and type approved by the Engineer. Points of compaction shall not be greater than 18" centers and to the full depth of the lift.

G. All pavements, curbs, gutters, sidewalks, borrow ditches, pipes, head walls, road signs, trees, shrubbery, and/or other permanent road facilities impaired by or as a result of construction operations at the construction site(s) occupied by materials and/or equipment, shall be restored immediately upon backfilling of the excavation to the original grades and cross sections, and to a condition as good as, or better than existing prior to construction.

H. All surfacing materials of roadways and driveway approaches cut or damaged by or as a result of construction operations, shall be replaced within ONE WEEK following the backfilling of excavation, weather permitting, with compacted layers of surfacing materials at least as thick as the existing, and no less than two inches (2") of asphalt concrete over six inches (6") of aggregate base, both as specified below.
   1. Asphalt Concrete: Combined mineral aggregate shall conform to the quality and gradation requirements for Type "A" one-half inch(1/2) maximum aggregate, coarse or medium gradation as specified in Section 39 of the California Standard Specifications. The bituminous binder to be mixed with mineral aggregate shall be paving asphalt having (Grade PG 64-10), unless otherwise directed by the Engineer. Placement of asphalt concrete surfacing shall conform to the applicable provisions of Section 39 of the California Standard Specifications.
   2. Aggregate Base: Combined mineral aggregates shall conform to the quality and the grading for three-quarter inch (3/4") maximum size aggregate Class 2 Aggregate Base specified in Section 26 of the California Standard Specifications.

I. Before acceptance of repairs to the County road rights-of-way, all unsightly and detrimental dirt, dust and/or debris shall be removed and the construction areas left in a neat and presentable condition(s).
   1. If necessary, County road traveled way and driveway pavements shall be washed with water to remove dirt and dust.
   2. Driveway approaches and field entrance pavements damaged by equipment or spoil banks shall be repaired as directed by the Engineer.

J. Upon request by the County, any settlement, sagging of surface, or cracking of pavement shall be repaired immediately by and at the sole expense of the Permittee for a period of one year following acceptance of the work.

SPECIAL PROVISIONS

Winter Weather Utility Work

---

1. **SUPERVISION:** The utility company (**permittee**) shall furnish full-time supervision of all work to insure compliance with the permit provision.

2. **START OF WORK:** No work within the County right-of-way shall be started until the utility company representative has made an evaluation of weather conditions and has determined the work can be accomplished under the provisions of the permit.

3. **CLEAN PAVEMENT:** Dirt and mud shall not be deposited on the pavement outside the area of work, and if inadvertently tracked onto the road travel way shall be removed immediately.

4. **DAILY RESTORATION:** Private driveways and road intersections shall be restored daily.

5. **WEATHER-TIGHT CONDITIONS:** All trenches shall be filled and compacted, ditches and other drainage facilities regarded and opened, and the entire work area restored to weather-tight condition prior to any rain.